(19) Europäisches Patentamt
European Patent Office
Office européen des brevets

(11) **EP 4 474 710 A1**

(12) **EUROPEAN PATENT APPLICATION**
published in accordance with Art. 153(4) EPC

(43) Date of publication:
11.12.2024 Bulletin 2024/50

(21) Application number: **22925089.9**

(22) Date of filing: **09.11.2022**

(51) International Patent Classification (IPC):
F24C 7/08 *(2006.01)* ***F24C 15/00*** *(2006.01)*
F24C 15/02 *(2006.01)* ***F24C 15/04*** *(2006.01)*

(52) Cooperative Patent Classification (CPC):
F24C 7/08; F24C 15/00; F24C 15/02; F24C 15/04

(86) International application number:
PCT/KR2022/017591

(87) International publication number:
WO 2023/149622 (10.08.2023 Gazette 2023/32)

(84) Designated Contracting States:
AL AT BE BG CH CY CZ DE DK EE ES FI FR GB GR HR HU IE IS IT LI LT LU LV MC ME MK MT NL NO PL PT RO RS SE SI SK SM TR
Designated Extension States:
BA
Designated Validation States:
KH MA MD TN

(30) Priority: **07.02.2022 KR 20220015418**

(71) Applicant: **LG Electronics Inc.**
Yeongdeungpo-gu
Seoul 07336 (KR)

(72) Inventor: **YANG, Jaewon**
Seoul 08592 (KR)

(74) Representative: **Ter Meer Steinmeister & Partner Patentanwälte mbB**
Nymphenburger Straße 4
80335 München (DE)

(54) **COOKING APPARATUS**

(57) Disclosed is an invention relating to a cooking apparatus. The disclosed invention comprises an air guide in the gap between a door and a control panel, and the air guide positioned in such a way covers, from the front, at least a portion of the structures positioned at the same height as the gap between the door and control panel.

FIG. 1

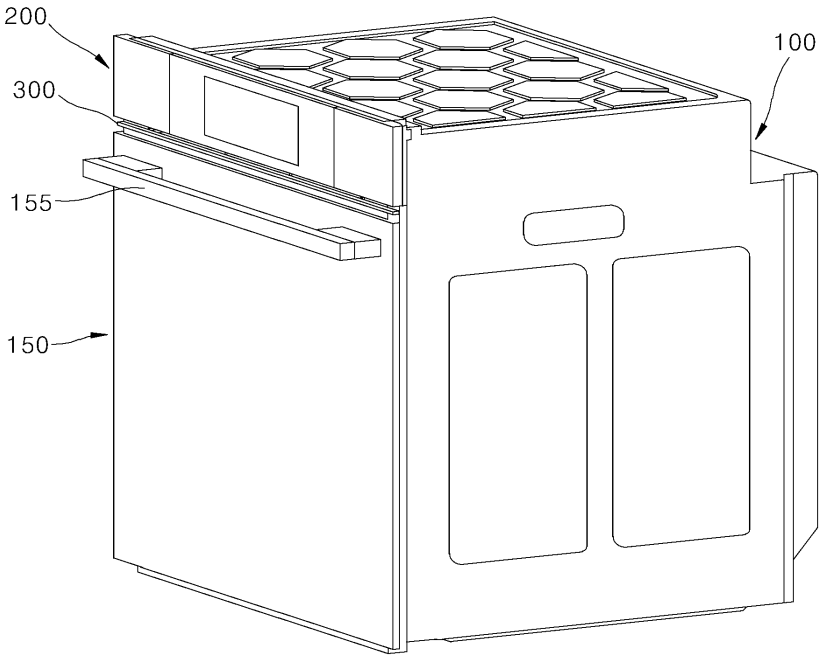

EP 4 474 710 A1

Description

FIELD

[0001] The present disclosure relates to a cooking appliance, and more particularly, to a cooking appliance having a door for opening and closing a cooking chamber.

DESCRIPTION OF RELATED ART

[0002] A cooking appliance is one home appliance installed in a kitchen space for cooking food. The cooking appliance cooks food according to a user's intention. The cooking appliances may be classified based on a type of a used heat source and a type of used fuel.

[0003] The cooking appliances may be classified based on a shape of a space in which the food is placed. In this regard, the cooking appliances may be classified into an open type cooking appliance and a closed type cooking appliance. The closed type cooking appliance may include an oven, a microwave oven, and the like. Examples of the open type cooking appliance include a cook top, a hob, a griddle, and the like.

[0004] The closed type cooking appliance is a cooking appliance in which a space where food is located is closed. This closed type cooking appliance may cook food by heating the closed space.

[0005] A cooking chamber is provided in the closed type cooking appliance. The cooking chamber is a space in which food is placed, and is a space that is closed when the cooking appliance cooks the food. The cooking chamber is a space in which food is substantially cooked.

[0006] A door for selectively opening and closing the cooking chamber may be pivotally provided in the closed type cooking appliance. The door may be pivotally installed at a main body having the cooking chamber defined therein via a door hinge disposed between the main body and the door. The door may have a portion coupled to the main body via the door hinge and may pivot about around the door hinge, thereby selectively opening and closing the cooking chamber.

[0007] A heat source may be provided in an inner space of the cooking chamber opened and closed by the door. The heat source is provided to heat the cooking chamber. A gas burner or an electric heater may be used as the heat source.

[0008] An electric component chamber may be disposed on top of the cooking chamber. The electric component chamber may accommodate therein electric components necessary for an operation of the closed type cooking appliance. The electric component chamber is formed as a space removed from the cooking chamber.

[0009] A cooling fan for cooling the electric component chamber may be provided in the inner space of the electric component chamber. The cooling fan may be provided in a form of a centrifugal fan such as a sirocco fan, and may be disposed to be closer to a rear surface of the electric component chamber.

[0010] The cooling fan may cool the electric component chamber by sucking external air and introducing the external air into the electric component chamber and forcibly discharging the hot air inside the electric component chamber to the outside.

[0011] The main body may include a cavity and a front panel. The cavity constitutes a framework of the main body, and the cooking chamber may be formed inside the cavity. The front panel may be disposed in front of the cavity to constitute a front surface of the main body.

[0012] The electric component chamber may be disposed on top of the cavity. In addition, a front surface of the electric component chamber may be shielded by the front panel. For example, at least a portion of the front panel may protrude upwardly beyond the cavity, and an upper area of the front panel disposed on top of the cavity may shield the front surface of the electric component chamber.

[0013] The front panel may be provided with an exhaust port. The exhaust port may be formed to extend through the front panel in a front-rear direction. The exhaust device may constitute a passage defined in the front panel for discharging air inside the electric component chamber to the outside.

[0014] The exhaust port may be disposed in a front surface of the front panel, that is, an upper area of the front surface of the front panel. A discharge flow path may be formed in front of the exhaust device. A control panel and a door may be disposed in front of the exhaust port, and a gap having a predetermined height may be formed between the control panel and the door arranged in a vertical direction. The discharge flow path may be formed in the gap between the control panel and the door.

[0015] The exhaust port may be exposed to the discharge flow path and may be connected to the discharge flow path. In addition, at least a portion of the exhaust port may be exposed to a position in front of the cooking appliance through the discharge flow path. That is, at least a portion of the exhaust device may be exposed to a position in front of the cooking appliance through the gap between the control panel and the door.

[0016] The air introduced into the electric component chamber under the operation of the cooling fan inside the electric component chamber may be discharged to the outside out of the electronic room through the exhaust port. The air discharged through the exhaust port may be discharged to a position in front of the cooking appliance through the

discharge flow path between the control panel and the door.

[0017] Heat inside the cooking chamber generated during a cooking process may be transferred to the outside out of the door through the door. To shield the conductive heat, a plurality of glasses may be installed in the door.

[0018] For example, a front glass constituting an outer surface of the door and a rear glass constituting an inner surface of the door may be installed, and a plurality of middle glass may be installed between the front glass and the rear glass. Each middle glass may be provided in a form in which a radiant energy reflective coating for heat shielding is formed thereon.

[0019] The heat inside the cooking chamber may be transferred to the inner surface of the door and then may be transferred through the middle glasses inside the door and then to the front glass. The conductive heat may be shielded by the radiant energy reflection coating of the inner middle glass.

[0020] In addition, a discharge port may be defined in an upper end of the door. The discharge port may be formed to extend through the upper end of the door in the vertical direction. Hot air inside the door may be discharged to the discharge flow path through the discharge port. At the same time, cold air may be suctioned through a lower portion of the door into the inside of the door from which the hot air has been discharged.

[0021] That is, the cooling of the door may be performed under the air flow in which the hot air in the door is discharged to a position on top of the door and the cold air is introduced into the door through the lower portion of the door.

[0022] As described above, the discharge port is disposed in the upper end of the door. The discharge port disposed in the upper end of the door may be connected to the discharge flow path. That is, the hot air discharged through the exhaust port and the hot air discharged through the discharge port may merge with each other in the discharge flow path.

[0023] The hot air discharged through the exhaust port from the inside of the electric component chamber may pass through the discharge flow path, pass through an upper area of the discharge port, and then be discharged to the outside out of the cooking appliance. In this process, the hot air flowing in the discharge flow path may flow backward into the door through the discharge port.

[0024] That is, the air discharged from the inside of the electric component chamber cannot be discharged to the outside out of the cooking appliance and may flow back into the door through the discharge port. When the backflow occurs, the inflow of the cold air into the door is not properly achieved, and accordingly, it is difficult to smoothly cool the door.

[0025] Prior art document 1 (Korean Patent Application Publication No. 10-2015-0030016) discloses an oven.

[0026] As illustrated in FIGS. 26 and 27, the oven 1 disclosed in the Prior Art Document 1 may include a casing 10 provided with a cooking chamber 20 and a door 30 for opening and closing an open front surface of the cooking chamber 20.

[0027] The cooking chamber 20 is a cooking space defined by a top plate 21, a bottom plate 22, both opposing side plates 23, and a rear plate 24. Various components constituting the oven 1 may be embedded in a space (hereinafter, referred to as an "electric component chamber") between an outside of the cooking chamber 20 and the casing 10. A control panel 12 for controlling the operation of the oven 1 may be installed on an upper end of the casing 10.

[0028] A cooling fan 50 may be installed outside the top plate 21. The cooling fan 50 may introduce outside air into the electric component chamber through at least one opening defined in the rear plate 11 of the casing 10, and then discharge the air introduced into the electric component chamber again to the outside.

[0029] A cooling flow path 55 may be provided in the inner space of the electric component chamber. The cooling flow path 55 constitutes a passage allowing the air suctioned by the cooling fan 50 to flow toward the front surface of the oven 1.

[0030] A cooling discharge port 57 may be provided in front of the cooling flow path 55. The air having flowed through the cooling flow path 55 may be discharged to a position on top of the door 30 through the cooling discharge port 57. The cooling discharge port 57 may be located in rear of the door 30.

[0031] A cooling guide 80 may be installed at a front end of the cooling discharge port 57. The cooling guide 80 may be provided in a form of a bracket bent to narrow a width of the cooling discharge port 57.

[0032] In the cooling discharge port 57 of which the width is narrowed due to the cooling guide 80, a flow speed of air having flowed through the cooling discharge port 57 may be increased. Accordingly, the air having flowed through the cooling discharge port 57 may be discharged to the outside out of the oven 1 at a high speed, while as the pressure of the cooling discharge port 57 is lowered, the air around the cooling discharge port 57 may flow toward the cooling discharge port 57.

[0033] As described above, under a force generated when the air around the cooling discharge port 57 flows toward a position on top of the door 30, the discharge of the air inside the door 30 to the position on top of the door 30 may be induced.

[0034] The Prior Art Document 1 suggests that the inflow of the cold air into the inside of the door 30 is activated by the induction of the discharge of the air inside the door 30 to the outside out thereof, and the backflow of the air discharged through the cooling discharge port 57 into the door 30 may be suppressed.

[0035] However, the approach in the Prior Art Document 1 has following problems.

[0036] According to the Prior Art Document 1, the air having flowed through the cooling discharge port 57 and the air discharged from the door 30 are discharged to a space located in front of the cooling discharge port 57 and on top of the door 30.

[0037] That is, the air discharged through the cooling discharge port 57 and the air discharged from the inside of the door 30 may merge with each other in the same space such that vortex may occur in the corresponding space. As the vortex is generated as described above, the air having flowed through the cooling discharge port 57 and the air discharged from the door 30 may not be properly discharged to the outside out of the oven 1, and rather, the air in the space may flow backward into the door 30.

[0038] In this case, it is difficult to properly cool the inside of the electric component chamber and cool the inside of the door 30.

[0039] Further, in the Prior Art Document 1, the cooling guide 80 extends in an elongated manner in a longitudinal direction thereof under and along the cooling discharge port 57, and the cooling guide 80 is fixed to the bottom of the cooling discharge port 57.

[0040] When the cooling discharge port 57 is divided into a plurality of portions arranged along a width direction of the oven 1, the cooling guide 80 fixed to the bottom of the cooling discharge port 57 should be divided into a plurality of portions arranged along the width direction of the oven 1.

[0041] In this case, the number of assembly processes and the number of components required to install the cooling guide 80 may be increased.

[0042] In addition, when the cooling discharge port 57 continuously extends in the width direction of the oven 1, that is, when only one elongate cooling discharge port 57 is formed in the oven 1, a strength of the front surface of the casing 1 may be weakened.

[0043] When meat or food containing meat is heated and cooked using the above-described closed type cooking appliance, oily ingredients such as fat or oil may float inside the cooking chamber, and then may be attached to a wall surface of the cooking chamber to contaminate the inner wall of the cooking chamber.

[0044] The oil ingredients attached (adhered) to the wall surface of the cooking chamber is polymerized so as to be tightly fixed thereto, thereby making it difficult to clean (remove) the polymerized oil ingredients.

[0045] A self-cleaning function for automatically removing the contaminants such as oil and the like is mounted in a cooking appliance that is being released recently.

[0046] The self-cleaning function of the cooking appliance is a function of automatically removing the contaminants such as oil that is attached (adhered) to the wall surface of the cooking chamber.

[0047] When the contaminants such as oil are attached to the wall surface of the cooking chamber, the self-cleaning in the cooking appliance is mainly performed using a pyrolysis scheme in which the contaminants are removed by heating the inside of the cooking chamber using a heat source such as a burner or a heater so that the temperature inside the cooking chamber is maintained at a high temperature for a long time.

[0048] The Prior Art Document 1 also discloses a pyrolysis cleaning function which is the same as or similar to the self-cleaning function. Accordingly, a control unit 38 of the Prior Art Document 1 may perform a washing mode in which the temperature inside the cooking chamber 20 is increased to thermally decompose and remove foreign substances. In this case, the pyrolysis washing may be performed by maintaining the internal temperature of the cooking chamber 20 at a high temperature for a long time using an electric heater 42 to burn and remove contaminants therefrom.

[0049] When the pyrolysis washing is performed as described above, the inside of the cooking chamber 20 is maintained at a very high temperature. Therefore, in order to prevent a safety accident, the door of the cooking appliance needs to be closed while the self-cleaning operation is performed.

[0050] To this end, the oven 1 may be provided with a door locking device. The door locking device may be installed on the front surface of the oven 1, and may include a latch provided so as to be engaged with the door 30 and a driving unit for operating the latch.

[0051] The driving unit may include a motor, and the driving unit and the latch may be connected to each other via a link structure. While the door 30 needs to be maintained in the closed state, the latch is maintained to be engaged with the door 30. When the door 30 is no longer maintained in the closed state, the state in which the latch is engaged with the door 30 may be released.

[0052] The latch may be installed on the front surface of the oven 1, pivot in a frontward direction, and protrude in the frontward direction of the oven 1. The latch may pivot in the frontward direction to be engaged with the door 30, and pivot in a backward direction so as to be removed from the door 30.

[0053] A catching groove may be defined in the upper end of the door 30, and the latch may move from a position on top of the catching grooves so as to be inserted into the catching groove and may be engaged with the door 30, and thus the door 30 may be locked by the door locking device.

[0054] The latch may be installed on the front surface of the oven 1 so as to be exposed so that the latch may protrude in the frontward direction of the oven 1 when necessary. In addition, the latch may be disposed on top of the door 30 such that the latch may be inserted into or removed from the catching groove defined in the upper end of the door 30.

[0055] In the Prior Art Document 1, when the latch is installed at the position as described above, the latch is exposed to a position in front of the oven 1 when the door 30 opens the cooking chamber 20 as well as when the door 30 closes the cooking chamber 20.

[0056] So, the latch disposed on top of the door 30 is exposed to a position in front of the oven 1 through a gap between the door 30 and the control panel, thereby reducing the aesthetics of the oven 1.

DISCLOSURE / TECHNICAL PURPOSE

[0057] A purpose of the present disclosure is to provide a cooking appliance having an improved structure to prevent air discharged from an electric component chamber from flowing backward into a door.

[0058] Another purpose of the present disclosure is to provide a cooking appliance having an improved structure constructed so that air discharged from an electric component chamber and air discharged from a door may be prevented from merging with each other at a position on top of a door and thus vortex may be prevented from being generated.

[0059] Still another purpose of the present disclosure is to provide a cooking appliance having an improved structure to prevent aesthetics of the cooking appliance from being lowered due to a structure such as a latch of a door locking device which is exposed to an outside through a gap between a control panel and a door.

[0060] Still another purpose of the present disclosure is to provide a cooking appliance with an improved structure to improve aesthetics of the cooking appliance while reducing the influence of high-temperature air discharged from the cooking appliance.

[0061] Still another purpose of the present disclosure is to provide a cooking appliance having an improved structure to simultaneously satisfy the purpose of suppressing the vortex generation and the purpose of improving the aesthetics of the cooking appliance.

TECHNICAL SOLUTION

[0062] A cooking appliance according to one embodiment of the present disclosure for achieving the above purpose is characterized in that an air guide is disposed in a gap between the door and the control panel, and the air guide screens at least a portion of the front panel while being disposed in front thereof.

[0063] Thus, according to the present disclosure, the gap between the door and the control panel may be partially screened, thereby improving the front aesthetics of the cooking appliance.

[0064] Another embodiment of the present disclosure is characterized in that an air guide is disposed in a gap between the door and the control panel.

[0065] Another embodiment of the present disclosure is characterized in that a front space surrounded with the control panel, the front panel, and the door is formed between the control panel and the door, and an air guide disposed in the front space is exposed to a position in front of the cooking appliance through a gap between the door and the control panel.

[0066] Another embodiment of the present disclosure is characterized in that an air guide is disposed in a gap between the door and the control panel, and the air guide screens at least a portion of a structure disposed at the same vertical level as a vertical level of the gap between the door and the control panel while being disposed in front thereof.

[0067] Further, another embodiment of the present disclosure is characterized in that a door exhaust port defined in the door is disposed between the exhaust port and the air guide.

[0068] Accordingly, the cooking appliance of the cooking appliance of the present disclosure may effectively suppress the backflow of air discharged from the electric component chamber into the door.

[0069] Further, another embodiment of the present disclosure is characterized in that the door exhaust port is disposed at a position in the door biased in a rearward direction.

[0070] Further, another embodiment of the present disclosure is characterized in that the door is divided into a front half portion and a rear half portion arranged in the front-rear direction, the door exhaust port is disposed in the rear half portion disposed in rear of the front half portion, and the door exhaust port is disposed at a lower vertical level than that of an upper end of the front half portion.

[0071] Another embodiment of the present disclosure is characterized in that at least a portion of the structure disposed at the same vertical level as that of the gap between the door and the control panel is screened with a cover protrusion provided to fix the air guide to the control panel.

[0072] Further, another embodiment of the present disclosure is characterized in that a cover protrusion provided to fix the air guide to the control panel is disposed to screen a partition wall disposed between the exhaust ports.

[0073] Accordingly, the cooking appliance of the present disclosure may provide an effect of improving the aesthetics of the cooking appliance while reducing the influence of high-temperature air discharged from the cooking appliance.

[0074] Further, another embodiment of the present disclosure is characterized in that a front space surrounded with the control panel, the front panel, and the door is formed between the control panel and the door, and the air guide may be disposed in the front space and at position biased toward a front side of the front space.

[0075] This may an effect of improving the aesthetics of the cooking appliance while suppressing vortex generation.

[0076] A cooking appliance according to one aspect of the present disclosure may include a cavity having a cooking chamber defined therein and having an open front surface; a door disposed in front of the cavity to open and close the

cooking chamber; a control panel disposed on top of the cavity and the door; a front panel disposed between the cavity and the door; and an air guide disposed in front of the front panel so as to screen at least a portion of the front panel, wherein the air guide is disposed between the door and the control panel.

[0077] Further, the cooking appliance may further include a cover protrusion protruding downwardly from a lower end of the control panel.

[0078] Further, the air guide may be spaced apart from the lower end of the control panel and is coupled to the control panel via the cover protrusion.

[0079] Further, a plurality of cover protrusions may be arranged to be spaced apart from each other by a predetermined distance, and the air guide may be coupled to each of the plurality of cover protrusions.

[0080] Further, the cover protrusion may be integrally formed with a lower end of the control panel.

[0081] Further, the cooking appliance may further include a cover protrusion protruding upwardly from the air guide toward the control panel and coupled to the control panel.

[0082] The air guide may be spaced apart from the lower end of the control panel and may be coupled to the control panel via the cover protrusion.

[0083] The cooking appliance may further include a plurality of inner cover protrusions protruding downwardly from a lower end of the control panel.

[0084] Further, a plurality of exhaust ports may be formed in the front panel, and may be spaced apart from each other by a predetermined distance in a lateral direction, wherein a partition wall may be formed between two adjacent exhaust ports, wherein the inner cover protrusion may be disposed in front of each partition wall so as to screen each partition wall.

[0085] Further, the cooking appliance may further include a latch disposed in the cavity and selectively engaged with the door, and an outer cover protrusion protruding downwardly from a lower end of the control panel.

[0086] Further, at least a portion of the latch may be exposed to a position in front of the front panel, wherein the outer cover protrusion may be disposed in front of the latch and screens at least a portion of the latch.

[0087] Further, the air guide may be disposed at a central position in the vertical direction between the door having closed the cooking chamber and the control panel.

[0088] Further, the outer cover protrusion may be disposed between the control panel and the air guide and may screen at least a portion of the latch while being disposed in front thereof.

[0089] Further, a pair of outer cover protrusions may be arranged symmetrically with each other around a lateral center of the cooking chamber.

[0090] Further, the inner cover protrusion may be disposed between the pair of outer cover protrusions.

[0091] Further, the air guide may be disposed in a front space surrounded with the door, the front panel, and the control panel.

[0092] Further, a door exhaust port configured to communicate an inner space of the door with the front space may be formed in an upper end of the door facing the control panel.

[0093] Further, the door exhaust port may be disposed between the air guide and the front panel in a front-rear direction.

[0094] Further, an electric component chamber may be formed on top of the cavity, wherein at least a portion of the front panel may be disposed in front of the electric component chamber.

[0095] An exhaust port for communicating an inner space of the electric component chamber with the front space may be formed in the front panel.

[0096] Further, the door exhaust port may be disposed between the air guide and the exhaust port of the front panel in the front-rear direction.

[0097] Further, a plurality of exhaust ports may be formed in the front panel, and may be spaced apart from each other by a predetermined distance in a lateral direction, wherein each of the inner cover protrusions may be disposed between two adjacent exhaust ports.

[0098] Further, the lower end of the control panel and the cover protrusion may be integrally formed with each other and may be made of a plastic material.

[0099] Further, the air guide may be made of a metal material.

[0100] Further, the door may be divided into a front half portion and a rear half portion arranged in the front-rear direction, and the door exhaust port may be defined in the rear half portion disposed in rear of the front half portion.

[0101] Further, the second half portion may have an inclined surface inclined downwardly as the second half portion extends in a rearward direction.

[0102] Further, the door exhaust port may be positioned at a lower vertical level than a vertical level of an upper end of the first half portion.

[0103] Further, the air guide may divide at least a portion of the front space into an upper space and a lower space.

[0104] Further, a lateral dimension of the air guide may correspond to at least one of a lateral dimension of the control panel and a lateral dimension of the door.

[0105] Further, the air guide may be formed in a shape in which a dimension in the front-rear direction is larger than a vertical dimension.

[0106] A vertical dimension of the air guide may be equal to or smaller than a vertical dimension of the front space.

TECHNICAL EFFECT

[0107] According to the cooking appliance of the present disclosure, the door exhaust port is disposed at a position which is farthest from a flow area in which the air discharged through the exhaust port flows, thereby effectively suppressing a phenomenon in which the hot air discharged to the front space flows backward into the door.

[0108] In addition, according to the present disclosure, the air guide disposed in the front space and at the front side of the front space S may be disposed in the air discharge flow path to divide the flow of air flowing through the air discharge flow path into the separate upper and lower portions, thereby effectively suppressing the generation of the vortex in the front space S.

[0109] In addition, according to the present disclosure, a portion of each of the structures exposed through the front gap may be screened with the air guide as a structure that laterally extends across the front gap and screens the front gap, thereby improving the front aesthetics of the cooking appliance.

[0110] In addition, according to the present disclosure, the air guide may allow a line of sight of the user that views the front gap to be concentrated on the air guide, thereby providing an effect that it seems like that only the air guide 300 is present in the front gap, thereby improving the front aesthetics of the cooking appliance.

[0111] Further, the air guide may constitute the structure that screens the front gap while being disposed at the central position of the front gap so that the upper area of the front gap and the lower area of the front gap are symmetrical to each other, and thus the front shape of the cooking appliance may be visible to the user in a more stable and balanced form, thereby effectively improving the front aesthetics of the cooking appliance.

[0112] In addition, according to the present disclosure, the outer cover protrusion provided to fix the air guide to the control panel may screen a large and complicated structure such as a latch, thereby providing an effect of allowing stable fixing of the air guide to the control panel and improving the front aesthetics of the cooking appliance.

[0113] In addition, according to the present disclosure, the inner cover protrusion may be disposed at a position so as to screen the partition wall distinguishing the exhaust ports from each other while being positioned in front of the partition wall, thereby reducing the risk of thermal deformation of the inner cover protrusion without interrupting the discharge of air through the exhaust port and further improving the front aesthetics of the cooking appliance.

[0114] In addition, according to the present disclosure, the air guide may be made of a metal material having excellent heat resistance and metal-specific gloss. Thus, the air guide may not be easily deformed even under high-temperature heat, may not be easily damaged even when an impact is applied thereto, and may contribute to improving the aesthetics of the cooking appliance due to the metal gloss.

[0115] In addition, the air guide according to the present embodiment may be positioned in the front space so s to be biased toward the front side of the front space, thereby providing an effect of suppressing the vortex generation in the front space and an effect of improving the aesthetics of the cooking appliance.

BRIEF DESCRIPTION OF DRAWINGS

[0116]

FIG. 1 is a perspective view illustrating a cooking appliance according to an embodiment of the present disclosure.
FIG. 2 is a side cross-sectional view illustrating an internal structure of the cooking appliance as illustrated in FIG. 1.
FIG. 3 is an enlarged view of a portion of the cooking appliance as illustrated in FIG. 2.
FIG. 4 is a front view of a front panel as illustrated in FIG. 2.
FIG. 5 is a plan cross-sectional view illustrating an internal structure of an electric component chamber as illustrated in FIG. 2.
FIG. 6 is an enlarged view of a portion of the cooking appliance as illustrated in FIG. 5.
FIG. 7 is an enlarged view of a portion of the cooking appliance as illustrated in FIG. 6.
FIGS. 8 and 9 are side cross-sectional views illustrating a structure of a door locking device according to an embodiment of the present disclosure.
FIG. 10 is a front view illustrating a cooking appliance according to an embodiment of the present disclosure.
FIG. 11 is a front exploded perspective view illustrating an exploded state of a door, a control panel, and an air guide as illustrated in FIG. 10.
FIG. 12 is a rear exploded perspective view illustrating an exploded state of the door, the control panel, and the air guide as illustrated in FIG. 10.
FIG. 13 is a front perspective view separately illustrating an air guide according to an embodiment of the present disclosure.
FIG. 14 is a rear perspective view of the air guide as illustrated in FIG. 13.

FIG. 15 is a front view illustrating a portion of a front surface of the cooking appliance in a state in which the air guide is excluded.

FIG. 16 is an enlarged view of a portion of a front surface of the cooking appliance as illustrated in FIG. 15.

FIG. 17 is a front view illustrating a portion of a front surface of the cooking appliance according to an embodiment of the present disclosure.

FIG. 18 is an enlarged view of a portion of a front surface of the cooking appliance as illustrated in FIG. 17.

FIG. 19 is a cross-sectional perspective view illustrating a coupling structure between an air guide and a control panel.

FIG. 20 is a cross-sectional exploded perspective view illustrating a removed state of the air guide and the control panel as illustrated in FIG. 19 from each other.

FIG. 21 is a perspective view illustrating another example of the air guide as illustrated in FIG. 13.

FIG. 22 is a cross-sectional exploded perspective view illustrating a coupling structure between the air guide and the control panel as illustrated in FIG. 21.

FIG. 23 is a cross-sectional view illustrating an air flow inside the cooking appliance according to an embodiment of the present disclosure.

FIG. 24 is an enlarged view of a portion of the cooking appliance as illustrated in FIG. 23.

FIG. 25 is an enlarged view of a portion of the cooking appliance as illustrated in FIG. 24.

FIG. 26 is a side cross-sectional view of a conventional oven.

FIG. 27 is an enlarged view of a portion of FIG. 26.

DETAILED DESCRIPTIONS

[0117] The above-described purposes, features, and advantages will be described in detail with reference to the accompanying drawings, and thus, those skilled in the art to which the present disclosure pertains may easily implement the technical spirit of the present disclosure. In the following description of the present disclosure, a detailed description of known functions and configurations incorporated herein will be omitted when it may make the subject matter of the present disclosure rather unclear. Hereinafter, preferred embodiments of the present disclosure will be described in detail with reference to the accompanying drawings. In the drawings, like reference numerals refer to like or similar components.

[0118] It will be understood that, although the terms first, second, etc. may be used herein to describe various components, these components should not be limited by these terms. These terms are only used to distinguish one component from another component, and unless otherwise stated, the first component may be the second component.

[0119] The present disclosure is not limited to the embodiments disclosed herein, but may be implemented in various different forms. The present embodiment is provided to fully inform a person of ordinary skill in the art that the present disclosure is complete. Therefore, it should be understood that the present disclosure is not limited to the embodiments disclosed below, but includes all modifications, equivalents, and substitutes included in the technical spirit and scope of the present disclosure, and the configuration of one embodiment may be added to or replaced with the configuration of another embodiment.

[0120] The accompanying drawings are used to allow the skilled person to the art to easily understand the technical idea of the present disclosure. It should be understood that the idea of the present disclosure is not limited by the accompanying drawings, and the present disclosure is not limited to the embodiments disclosed below, and includes all modifications, equivalents, and substitutes included in the technical spirit and scope of the present disclosure. In the drawings, the components may be expressed to be exaggerated or reduced in size or thickness in consideration of convenience of understanding. However, the scope of protection of the present disclosure should not be construed as limited by the expression.

[0121] The terminology used herein is directed to the purpose of describing particular embodiments only and is not intended to be limiting of the present disclosure. As used herein, the singular constitutes "a" and "an" are intended to include the plural constitutes as well, unless the context clearly indicates otherwise. It will be further understood that the terms "comprises" and/or "including," when used herein, specify the presence of stated features, integers, steps, operations, components, and/or parts. That is, it should be understood that the terms "comprising," " including, " and the like as used herein does not preclude the presence or addition of one or more other features, numbers, steps, operations, components, parts, or combinations thereof.

[0122] It will be understood that, although the terms first, second, etc. may be used herein to describe various components, these components should not be limited by these terms. The terms are used only for the purpose of distinguishing one component from another component.

[0123] It will be understood that when a component is referred to as being "connected" or "coupled" to another component, it may be directly connected or coupled to another component or an intervening component may also be present therebetween. On the other hand, when a component is referred to as being "directly coupled with/to" or "directly connected to" another component, it should be understood that there is no intervening component present therebetween.

[0124] It should be understood that when a component is referred to as being "on" or "under" another component, it may

be directly disposed on or under another component or an intervening component may also be present therebetween.

[0125] Unless otherwise defined, all terms including technical and scientific terms used herein have the same meaning as commonly understood by one of ordinary skill in the art to which this inventive concept belongs. It will be further understood that terms, such as those defined in commonly used dictionaries, should be interpreted as having a meaning that is consistent with their meaning in the context of the relevant art and will not be interpreted in an idealized or overly formal sense unless expressly so defined herein.

[0126] In a state in which the cooking appliance is placed on the floor, a side at which the door is installed is defined as a front side around a center of the cooking appliance. Accordingly, a direction in which the food enters the cooking appliance after the door is opened is a rearward direction. For convenience, the front-rear direction may be referred to as a first direction. Thus, the front side may be one side in the first direction, and the rear side may be the other side in the first direction.

[0127] Further, the direction of gravity may be defined as a downward direction. A direction opposite to the direction of gravity may be defined as an upward direction.

[0128] A horizontal direction perpendicular to the front-rear direction of the cooking appliance, that is, a width direction of the cooking appliance when the cooking appliance is viewed by a viewer in front of the door of the cooking appliance may be referred to as a left-right direction. For convenience, the left-right direction may be referred to as a second direction. Then, the right side may be one side in the second direction, and the left side may be the other side in the second direction.

[0129] Further, a width direction of the cooking appliance may be referred to as a lateral direction. Then, the right side may be referred to as one side in the lateral direction, and the left side may be referred to as the other side in the lateral direction.

[0130] Further, the above-described vertical direction may be referred to as a third direction. Then, an upper side may be referred to as one side in the third direction, and a lower side may be referred to as the other side in the third direction.

[0131] In addition, the above-described vertical direction may be referred to as an up-down direction. Then, the horizontal direction may include the front-rear direction, and the left-right direction, that is, the first direction and the second direction.

[0132] As used herein, "A and/or B" means A, B or A and B, unless specifically stated otherwise. As used herein, "C to D" means C inclusive to D inclusive unless otherwise specified.

[Overall Structure of Cooking Appliance]

[0133] FIG. 1 is a perspective view illustrating a cooking appliance according to an embodiment of the present disclosure, and FIG. 2 is a side cross-sectional view illustrating an internal structure of the cooking appliance as illustrated in FIG. 1. Further, FIG. 3 is an enlarged view of a portion of the cooking appliance as illustrated in FIG. 2, and FIG. 4 is a front view separately illustrating a front panel as illustrated in FIG. 2.

[0134] Referring to FIGS. 1 to 4, the cooking appliance according to an embodiment of the present disclosure has an outer appearance defined by a main body 100. The main body 100 may have a substantially rectangular parallelepiped shape. The main body 100 may be made of a material having a predetermined strength to protect a plurality of components installed in an inner space of the main body.

[0135] The main body 100 may include a cavity 110. The cavity 110 may constitute a skeleton of the main body 100.

[0136] In addition, the main body 100 may further include a front panel 120. The front panel 120 may be disposed in front of the cavity 110 to constitute a front surface of the main body 100.

[0137] In another example, the front panel 120 may not be provided separately from the cavity 110, and a front surface of the cavity 110 may constitute the front surface of the main body 100.

[0138] For example, the main body 100 may be constructed such that the cavity 110 and the front panel 120 may be integrally formed with each other.

[0139] A cooking chamber 101 may be defined in the cavity 110. An opening 126 may be defined in the front panel 120 so as to communicate with the cooking chamber 101.

[0140] The cooking chamber 101 may have a hexahedral shape with an open front surface. In a state in which the cooking chamber 101 is closed, the cooking appliance may cook food by heating the inner space of the cooking chamber 101. That is, in the cooking appliance, the inner space of the cooking chamber 101 is a space in which the food is substantially cooked.

[0141] The cooking appliance may be provided with a heating unit for heating the cooking chamber 101. In an example of the heating unit, a convection unit 160 for convection of hot air to heat the inner space of the cooking chamber 101 may be provided as the heating unit and may be disposed in rear of the cooking chamber 101. In addition, an upper heater 165 or an upper burner for heating the inner space of the cooking chamber 101 from an upper side thereof may be provided as a heating unit and may be disposed on top of the cooking chamber 101. In addition, a lower heater or a lower burner for heating the inner space of the cooking chamber 101 may be disposed under the cooking chamber 101 and may also be provided as a heating unit.

[0142] A door 150 that selectively opens and closes the cooking chamber 101 may be pivotally provided in front of the main body 100. The door 150 may open and close the cooking chamber 101 in a pull-down manner in which an upper end of the door 150 pivots upwardly or downwardly about a lower end thereof.

[0143] The door 150 may be formed in a hexahedral shape having a predetermined thickness. A handle 155 that may be gripped by the user when the user wants to pivot the door 150 may be installed on a front surface of the door 150.

[0144] In addition, a see-through window may be provided in the door 150. The see-through window may be made of a transparent material such as glass or transparent plastic. According to the cooking appliance to which the see-through window is applied, the see-through window may need to be formed to endure high temperature and high pressure, and a function of waterproofing, heat dissipation, and the like may also be required in the see-through window.

[0145] A control panel 200 may be provided on an upper portion of the front surface of the cooking appliance, that is, on a front surface of a portion on top of the cavity 110. The control panel 200 may constitute a portion of the front appearance of the cooking appliance. A display unit may be provided on the control panel 200. The display unit may include an input unit for adjusting an operation of the cooking appliance and a display for displaying an operation state of the cooking appliance.

[0146] In an example, the input unit and the lay may be integrated into one panel. For example, the input unit and the display may be integrated into the touch panel receiving a user's touch input.

[0147] The display may display a user experience interface (UI) or a graphic user interface (GUI) related to the operation of the cooking appliance.

[0148] Specifically, the display may include at least one of a liquid crystal display (LCD), a thin film transistor-liquid crystal display (TFT-LCD), an organic light-emitting diode (OLED), a flexible display, and a three-dimensional (3D) display.

[0149] When the display and a touch sensor for sensing a touch operation are stacked in a layered manner to constitute a touch screen, the display may be used as an input device as well as an output device. The touch sensor may be implemented as a touch film, a touch sheet, a touch pad, or the like.

[0150] In addition, the touch sensor may be configured to convert a change in a pressure applied to a specific portion of the display or a capacitance generated at a specific portion of the display into an electric input signal.

[0151] A plurality of buttons may be displayed on the control panel 200 having such a display. For example, a knock-on button for setting a function of turning on/off a lamp 70 installed in the cooking chamber 101 by the user's knock input may be displayed on the control panel 200.

[0152] In addition, a lamp button for setting a function of manually turning on/off the lamp may be displayed on the control panel 200. Further, when the cooking appliance is an oven, a self-cleaning button for setting a self-cleaning function of the cooking chamber 101 may be displayed on the control panel 200.

[0153] An electric component chamber 103 may be provided outside the cavity 110, more specifically, on top of the cavity 110. The electric component chamber 103 may be disposed on top of the cavity 110 and in rear of the control panel 200. A space for installing electric components therein may be defined inside the electric component chamber 103.

[0154] A front surface of the electric component chamber 103 may be shielded with the front panel 120. The front panel 120 may be disposed between the cavity 110 and the door 150. At least a portion of the front panel 120 may be disposed to block the front surface of the electric component chamber 103.

[0155] For example, an upper area of the front panel 120 disposed on top of the cooking chamber 101 may shield the front surface of the electric component chamber 103. A portion of the front panel 120 may protrude upwardly beyond the cavity 110 to define a front boundary surface of the electric component chamber 103.

[0156] The front panel 120 may be provided with an exhaust port 122. The exhaust port 122 may be formed to extend through the front panel 120 in the front-rear direction. The exhaust port 122 may constitute a passage defined in the front panel 120 through which air inside the electric component chamber 103 flows through the front panel 120 and is discharged to an outside out of the electric component chamber 103.

[0157] The exhaust port 122 may be disposed at a position closer to one end of the front panel 120 in the left-right direction around a center of the front panel 120 in the left-right direction. For example, the exhaust port 122 may be disposed between the center of the front panel 120 in the left-right direction and a right side of the front panel 120.

[0158] In another example, the front panel 120 may not be provided separately from the cavity 110, and the front surface of the cavity 110 may constitute the front surface of the main body 100. In this case, the exhaust port 122 may be defined in a front surface of the cavity 110 formed in a shape corresponding to a shape of the front panel 120.

[Structure of Door]

[0159] Referring to FIGS. 1 to 3, the door 150 may include a door frame 151 and a front glass 153.

[0160] The door frame 151 may constitute a skeleton of the door 150 and may constitute an upper surface, a lower surface, and a side surface of the door 150. The door frame 151 may be formed in a hexahedral shape with open front and rear surfaces.

[0161] A hinge for pivotally coupling the door frame 151 to the main body 100 may be installed at a bottom of the door frame 151. Such a hinge may be installed at a lower end of the door frame 151, and the hinges may be installed at both

opposing lateral sides of the door frame 151, respectively.

[0162] The front glass 153 may be disposed in front of the door frame 151. The front glass 153 may be coupled to the door frame 151 while being disposed in front of the door frame 151 to constitute a front appearance of the door 150.

[0163] Further, the door 150 may further include a rear glass 156. The rear glass 156 may be coupled to the door frame 151 and may be disposed in rear of the door frame 151 and may constitute a rear appearance of the door 150.

[0164] In addition, the door 150 may further include an inner glass 154. In this embodiment, it is illustrated that the door 150 includes a plurality of inner glass 154. The inner glass 154 may be disposed in rear of the front glass 153 and in front of the rear glass 156, and may be coupled to the door frame 151 while being disposed in rear of the front glass 153 and in front of the rear glass 156.

[0165] The plurality of inner glass 154 may be disposed inside the door 150 so as to be spaced apart from each other by a predetermined distance in the front-rear direction. The plurality of inner glass 154 may include the rearmost inner glass 154 and may be disposed between the rear glass 156 and the front glass 153.

[0166] The inside of the door 150 may be partitioned into a plurality of spaces arranged in the front-rear direction via the inner glasses 154 positioned as described above. The plurality of inner glass 154 positioned as described above may serve to prevent heat transferred from the inside of the cooking chamber 101 to the door 150 from being transferred to the front surface of the door 150.

[0167] External air may be introduced into the door 150 in which the inner glass 154 has been disposed. For example, the external air may be introduced into the door 150 through an open lower end of the door 150. The air introduced into the door 150 may flow through the inside of the door 150 and cool the door 150.

[0168] A door exhaust port 152 may be provided in an upper end of the door 150 facing the control panel 200. The door exhaust port 152 may constitute a passage defined in the upper end of the door 150 for communicating the inside of the door 150 with the outside out of the door 150. The door exhaust port 152 may vertically extend through the upper end of the door frame 151.

[0169] According to the present embodiment, the upper end of the door frame 151 may be divided into a front half portion 150a and a rear half portion 150b. The first half 150a may constitute a front side of the upper end of the door frame 151, and the second half 150b may constitute a rear side of the upper end of the door frame 151.

[0170] The front half portion 150a may constitute a horizontal plane perpendicular to the vertical axis. The rear half portion 150b disposed in rear of the front half portion 150a may constitute an inclined surface inclined downwardly toward the rear side.

[0171] The door exhaust port 152 may be provided in the upper end of the door 150, and may be defined in the rear half portion 150b. Accordingly, the door exhaust port 152 may be disposed at a position biased rearwardly in the front-rear direction of the door 150, and may be disposed at a lower vertical level than a vertical level of the uppermost end of the door 150 constituted by the front half portion 150a.

[Internal Structure of Electric Component Chamber]

[0172] FIG. 5 is a plan cross-sectional view illustrating an internal structure of the electric component chamber as illustrated in FIG. 2.

[0173] Referring to FIGS. 3 and 5, a lower boundary surface of the electric component chamber 103 may be defined by a blocking plate 131 (an upper panel 130) disposed on top of the cavity 110. An upper boundary surface of the electric component chamber 103 may be defined by an electric component chamber cover 135 covering a top of the electric component chamber 103.

[0174] In addition, a side surface and a rear boundary surface of the electric component chamber 103 may be defined by both opposing side surfaces and a rear surface of the electric component chamber cover 135, or may be defined by both opposing side surfaces of a portion of the cavity 110 protruding upwardly of the cooking chamber 101 and the rear surface of the electric component chamber cover 135.

[0175] As described above, various electric components may be disposed in the electric component chamber 103. In an example, a circuit board may be disposed inside the electric component chamber 103. Various components, circuits, and the like related to the reception of an operation signal input through the control panel 200, generation of a control signal for controlling an operation of the heating unit, and the like may be provided on the circuit board.

[0176] The upper panel 130 may include the blocking plate 131 and a duct 133.

[0177] The blocking plate 131 may be disposed to block a space between the cavity 110 and the electric component chamber 103. The blocking plate 131 may be disposed on top of the cavity 110 so as to define the lower boundary surface of the electric component chamber 103.

[0178] The duct 133 may protrude upwardly from the blocking plate 131. The duct 133 may constitute a passage through which air inside the electric component chamber 103 is discharged to the outside out of the electric component chamber 103 through the inside of the duct 133. That is, the duct 133 may constitute a passage through which air suctioned by a fan module 170 to be described later flows toward the exhaust port 122.

[0179] The fan module 170 may be disposed in the electric component chamber 103. The fan module 170 may be disposed at a position adjacent to the rear surface of the cavity 110, that is, a position inside the electric component chamber 103 closer to a rear side of the electric component chamber 103.

[0180] The fan module 170 may include a turbo fan installed in the electric component chamber 103. The fan module 170 may suck the external air through the rear side of the electric component chamber 103 and discharge the air to the front side thereof.

[0181] The external air in rear of and adjacent laterally to the cooking appliance may be introduced into the electric component chamber 103 under an operation of the fan module 170.

[0182] For example, after the external air introduced through the lower portion of the main body 100 flows through the rear space of the cooking appliance, the external air may be introduced into the electric component chamber 103 through a vent hole 104 formed at the rear side of the electric component chamber 103. In addition, the external air may be introduced into the electric component chamber 103 through a vent hole 104 formed a lateral side of the electric component chamber 103.

[0183] As described above, the air introduced into the electric component chamber 103 may flow in a frontward direction inside the electric component chamber 103 and may cool the electric components inside the electric component chamber 103.

[0184] As described above, the air introduced into the electric component chamber 103 may be suctioned into the duct 133 under the operation of the fan module 170. The air introduced into the duct 133 may flow in a frontward direction inside the duct 133 and then be discharged to a position in front of the electric component chamber 103 through the exhaust port 122.

[0185] A cooling flow path 105 may be provided inside the electric component chamber 103. The cooling flow path 105 may constitute a passage allowing the air suctioned under the operation of the fan module 170 to flow toward the exhaust port 122.

[0186] A lower boundary surface of the cooling flow path 105 may be defined by the blocking plate 131 disposed between an upper surface of the cavity 110 and the electric component chamber cover 135. Further, upper, side, and rear boundary surfaces of the cooling flow path 105 may be defined by the duct 133 covering a top of the cooling flow path 105.

[0187] In addition, the upper panel 131 may have an air inlet hole 132 defined therein. The air inflow hole 132 may be disposed at a position at which the hole may communicate with the cooling flow path 105. The air inflow hole 131 may be formed to extend through the blocking plate 131 in the vertical direction.

[0188] The air inflow hole 132 may constitute a passage connecting a space between the upper surface of the cavity 110 and the blocking plate 131 to the cooling flow path 105. Due to the heated cavity 110, the heated air present between the upper surface of the cavity 110 and the blocking plate 131 may be introduced into the cooling flow path 105 through the air inflow hole 132 and then discharged to the outside out of the cooking appliance through the exhaust port 122.

[0189] A temperature of the space between the upper surface of the cavity 110 and the blocking plate 131 may significantly affect a temperature of the electric component chamber 103. Therefore, when the temperature of the space between the upper surface of the cavity 110 and the blocking plate 131 can be lowered, the temperature of the electric component chamber 103 can be effectively lowered.

[0190] In consideration of this fact, in the present embodiment, the heat in the space between the upper surface of the cavity 110 and the blocking plate 131 may be discharged to the outside through the air inflow hole 132, so that the cooling of the electric component chamber 103 may be more effectively performed.

[Protruding Surface Portion of Front Panel and Surrounding Structure Thereof]

[0191] FIG. 6 is an enlarged view of a portion of the cooking appliance as illustrated in FIG. 5, and FIG. 7 is an enlarged view of a portion of the cooking appliance as illustrated in FIG. 6.

[0192] Referring to FIGS. 3 to 7, the front panel 120 may be provided with a protruding surface portion 123. The protruding surface portions 123 may be disposed at both ends of the front panel 120, respectively.

[0193] Each of the protruding surface portions 123 may protrude in a frontward direction from each lateral end portion of the front panel 120. For example, each of the protruding surface portions 123 may include a first protruding surface 123a and a second protruding surface 123b.

[0194] The first protruding surface 123a may protrude in a frontward direction from a lateral end of the front panel 120. The second protruding surface 123b may extend laterally from the first protruding surface 123a. The first protruding surface 123a may protrude in a direction perpendicular to the front panel 120, and the second protruding surface 123b may extend in a direction parallel to the front panel 120.

[0195] The door 150 disposed in front of the front panel 120 may cover the protruding surface portion 123 and close the cooking chamber 101.

[0196] For example, a side surface of the door 150 may cover the first protruding surface 123 a, and a rear edge of the door 150 may cover the second protruding surface 123a and close the cooking chamber 101.

[0197] According to this embodiment, the front glass 153 of the door 150 may be formed to protrude further laterally beyond the remaining components of the door 150, that is, the door frame 151, the inner glass 154, and the rear glass 156.

[0198] A portion of the front glass 156 protruding further laterally beyond the remaining components of the door 150 may cover the second protruding surface 123b while being disposed in front thereof. A side surface of the door frame 151 may cover the first protruding surface 123a while being disposed laterally and inwardly of the protruding surface portion 123.

[0199] The door 150 provided to cover the protruding surface portion 123 while being disposed in front thereof may entirely cover the main body 100 while being disposed in front thereof and close the cooking chamber 101.

[0200] In one example, the cooking appliance of the present embodiment may further include a reinforcing member 125. According to the present embodiment, the protruding surface portion 123 may be a protrusion integrally formed with the front panel 120. The reinforcing member 125 may be provided to reinforce a strength of the protruding surface portion 123 as the protrusion extending from the front panel 120.

[0201] A rear side of the reinforcing member 125 may be coupled to the front panel 120, and a front side of the reinforcing member 125 may be coupled to the protruding surface portion 123. More specifically, the front side of the reinforcing member 125 may be coupled to the second protruding surface 123b.

[0202] Preferably, a front surface of the reinforcing member 125 may constitute a plane parallel to the second protruding surface 123b. The front surface of the reinforcing member 125 may be in surface contact with the second protruding surface 123b and may be coupled to the second protruding surface 123b.

[0203] The reinforcing member 125 coupled to the protruding surface portion 123 may firmly support the protruding surface portion 123, particularly, the second protruding surface 123b, and may reinforce the strength of the protruding surface portion 123.

[0204] As described above, as the strength of the protruding surface portion 123 is reinforced, the protruding surface portion 123 may stably support the door 120 closing the cooking chamber 101 and may be in close contact with the door 120.

[0205] In addition, the protruding surface portion 123 may further include a fastening boss 123c. The fastening boss 123c may protrude rearwardly from the second protrusion surface 123b. The second protruding surface 123b and the reinforcing member 125 may be coupled to each other by a fastening member such as a screw in a state in which the second protruding surface 123b and the reinforcing member 125 contact and face each other in the front-rear direction.

[0206] The fastening member coupling the second protruding surface 123b and the reinforcing member 125 to each other may be stably supported on the protruding surface portion 123 by the coupling boss 123b. In addition, as a thickness of the second protruding surface 123b is increased due to the fastening boss 123b, the strength of the protruding surface portion 123, particularly, the second protruding surface 123b may be more effectively strengthened.

[Front Space and Surrounding Structure Around Front Space]

[0207] FIGS. 8 and 9 are side cross-sectional views illustrating a structure of a door locking device of the cooking appliance as illustrated in FIG. 1.

[0208] Referring to FIGS. 2 to 8, a front space S may be formed in front of the electric component chamber 103. The front space S may be disposed in front of the front panel 120. In addition, the front space S may be disposed under the control panel 200. In addition, the front space S may be disposed on top of the door 150 that closes the cooking chamber 101.

[0209] In this embodiment, the front space S may be a space surrounded with the door 150, the front panel 120, and the control panel 200. That is, the front space S may be a space formed between the control panel 200 and the door 150 while being in front of the front panel 120.

[0210] The front space S may be exposed to a position in front of the cooking appliance through a gap between the control panel 200 and the door 150.

[0211] The exhaust port 122 may be disposed in rear of the front space S. As described above, the exhaust port 122 may be formed in the front panel 120. The air flowing in a frontward direction while cooling the electric components in the electric component chamber 103 may be discharged to the front space S through the exhaust port 122.

[0212] According to this embodiment, the front panel 120 may be provided with a plurality of exhaust ports 122. The plurality of exhaust ports 122 may be arranged to be spaced apart from each other by a predetermined distance in the lateral direction.

[0213] In addition, a partition wall 121 may be formed between the two exhaust ports 122 adjacent to each other in the lateral direction. The partition wall 121 may serve to improve the strength of the front panel 120 by supporting the front panel 120 while being disposed between the two adjacent exhaust ports 122.

[0214] The door exhaust port 152 may be disposed under the front space S. As described above, the door exhaust port 152 may be formed in the upper end of the door 150. The air flowing upwardly while cooling the door 150 inside the door 150 may be discharged to the front space S through the door exhaust port 152.

[0215] The door locking device may be provided at a front side of the main body 100. The door locking device may be installed on the front surface of the main body 100. The door locking device may include a latch 140 provided to be engaged

with the door 150 and a latch driver 145 for operating the latch 140.

[0216] The latch driver 145 and the latch 140 may be connected to each other via a link structure. While the door 150 needs to be maintained to be closed, the latch is maintained to be engaged with the door 150. When the door 150 is no longer maintained in the closed state, the state in which the latch 140 is engaged with the door 150 may be released.

[0217] The latch 140 may be installed on the front surface of the main body 100, for example, on the front side of the cavity 110 or at the front panel 120, and may pivot in a frontward direction and protrude in the frontward direction of the main body 100. The latch 140 may pivot in a frontward direction and protrude in a frontward direction to be engaged with the door 150 (see FIG. 9), may pivot backwardly, and may be removed from the door 150 (see FIG. 8).

[0218] A catching groove 151a may be defined in the upper end of the door 150. The catching groove 151a may be recessed downwardly in the upper end of the door frame 151. The latch 140 may move from a position on top of the catching groove 151a so as to be inserted into the catching groove 151a and may be engaged with the door 150, and accordingly, the door 150 may be locked by the door locking device.

[0219] The latch 140 may be installed on the front surface of the main body 1 so as to be exposed to a position in front of the main body 1 so that the latch 140 may protrude in a frontward direction toward the door 150 when necessary. In addition, the latch 140 may be disposed on top of the door 150 such that the latch is inserted into or removed from the catching groove 151a provided in the upper end of the door 150.

[0220] According to the present embodiment, the cooking appliance may provide a self-cleaning function. The self-cleaning may include heating the inside of the cooking chamber 101 using the heating unit so that the temperature inside the cooking chamber 101 is maintained at a high temperature for a long time, thereby burning and removing contaminants.

[0221] In the present embodiment, an example in which the door locking device locks the door 150 while the latch 140 is engaged with the door 150 during the self-cleaning is illustrated. Accordingly, the latch 140 may be maintained in a state of being inserted into the main body 100 usually. The latch may protrude in a frontward direction and may lock the door 150 only during the self-cleaning process.

[0222] In this embodiment, a vertical level of the latch 140 is illustrated as being equal to a vertical level of the exhaust port 122. Accordingly, the latch 140 may be disposed at a position higher than that of the door 150 and at a lower position than that of the control panel 200.

[0223] For example, a latch hole 124 may be formed in the front panel 120 so as to extend through the front panel 120 in the front-rear direction. In addition, the latch 140 may be installed such that the latch enters or exits the inside of the main body 100 through the latch hole 124.

[0224] For example, the latch 140 may be exposed to a position in front of the main body 100 through the latch hole 124, and may protrude in a frontward direction of the main body 100 through the latch hole 124. At least a portion of the latch 140 positioned as described above may be exposed to the front space S and thus may be exposed to a position in front of the cooking appliance through the gap between the door 150 and the control panel 200.

[Structure of Air Guide]

[0225] FIG. 10 is a front view illustrating a cooking appliance according to an embodiment of the present disclosure, FIG. 11 is a front exploded perspective view illustrating an exploded state of the door, the control panel, and the air guide as illustrated in FIG. 10, and FIG. 12 is a rear exploded perspective view illustrating an exploded state of the door, the control panel, and the air guide as illustrated in FIG. 10. Further, FIG. 13 is a front perspective view separately illustrating an air guide according to an embodiment of the present disclosure, and FIG. 14 is a rear perspective view of the air guide as illustrated in FIG. 13.

[0226] Referring to FIGS. 3 and 10 to 12, the cooking appliance according to the present embodiment may further include an air guide 300.

[0227] The air guide 300 may be disposed between the door 150 and the control panel 200. More specifically, the air guide 300 may screen at least a portion of the front panel 120 and may be disposed between the door 150 and the control panel 200.

[0228] The air guide 300 may be disposed in a space surrounded with the door 150, the front panel 120, and the control panel 200, that is, the front space S.

[0229] In this embodiment, the air guide 300 is illustrated as being formed in a frame shape having a lateral dimension much larger than each of a longitudinal dimension and a vertical dimension thereof. The air guide 300 may be formed in a shape in which the dimension in the front-rear direction is larger than the vertical dimension.

[0230] Hereinafter, the dimension in the front-rear direction of the air guide 300 may be referred to as a "length", the lateral dimension of the air guide 300 may be referred to as a "width", and the vertical dimension of the air guide 300 may be referred to as a "thickness".

[0231] According to the present embodiment, the air guide 300 may be formed in a frame shape having the width greater than each of the length and the thickness and having the thickness smaller than each of the length and the width.

[0232] The vertical dimension, that is, the thickness of the air guide 300 may be equal to or smaller than the vertical

dimension of the front space S. The air guide 300 may be accommodated in the front space S. Further, the air discharged from the exhaust port 122 or the door exhaust port 152 may flow in a frontward direction from the inside of the front space S and then flow through the air guide 300, and may be discharged to the outside out of the cooking appliance through the air guide 300.

[0233] The air guide 300 disposed in the front space S may partition at least a portion of the front space S into an upper space and a lower space.

[0234] The lateral dimension, i.e. the width, of the air guide 300 may be a dimension corresponding to a lateral dimension of the front space S. For example, the width of the air guide 300 may correspond to at least one of a lateral dimension of the control panel 200 and a lateral dimension of the door 150.

[0235] The air guide 300 may be disposed in the front space S, and may be disposed at a position biased in the frontward direction around a center of the front space S. The air guide 300 may divide a front area of the front space S into an upper space and a lower space.

[0236] In addition, the air guide 300 may be disposed under the control panel 200 so as to be coupled to the control panel 200. To this end, a cover protrusion 210 and 220 may be provided between the control panel 200 and the air guide 300.

[0237] The cover protrusion 210 and 220 may protrude downwardly from a lower end of the control panel 200. The air guide 300 may be coupled to the cover protrusion 210 and 220 while being disposed at a position spaced apart from the lower end of the control panel 200. The air guide 300 may be disposed under the control panel 200 so as to be spaced apart from the control panel 200 by a predetermined distance.

[0238] According to the present embodiment, a plurality of cover protrusions 210 and 220 may be arranged to be spaced apart from each other by a predetermined distance in the lateral direction. In addition, the air guide 300 may be coupled to each of the plurality of cover protrusions 210 and 220 and thus may be stably fixed to the lower end of the control panel 200.

[0239] Referring to FIGS. 9, 13, and 14, the air guide 300 may include a guide main body 310 and an extension 320.

[0240] The guide main body 310 may occupy a significant portion of an area of the air guide 300, and may constitute a significant portion of an outer appearance of the air guide 300. According to this embodiment, the cover protrusions 210 and 220 may be coupled to the guide main body 310. To this end, a length of the guide main body 310 in a length of the air guide 300 may be set to be equal to or greater than a length by which the cover protrusions 210 and 220 are arranged.

[0241] That is, the guide main body 310 may be formed to have a sufficient length required for coupling with all of the cover protrusions 210 and 220.

[0242] The extensions 320 may be respectively disposed on both opposing lateral ends of the guide main body 310. The extension 320 may protrude from the guide main body 310 in a lateral direction.

[0243] The extension 320 may not be coupled to the cover protrusions 210 and 220. Accordingly, a length of the extension 320 may be set to be smaller than the length of the guide main body 310.

[0244] Since the extension 320 is formed in a shape in which the length of the extension 320 is smaller than the length of the guide body portion 310, an overall size and weight of the air guide 300 may not unnecessarily increase.

[0245] The extension 320 may be positioned to be biased in a frontward direction of the air guide 300. Preferably, the guide main body 310 and the extension 320 may be laterally connected to each other so that a front end of the extension 320 and a front end of the guide main body 310 are aligned with each other along the same line.

[0246] Accordingly, even though the length of the extension 320 is set to be smaller than the length of the guide main body 310, a front outer appearance of the air guide 300 may be continuous and smooth.

[0247] In addition, the extension 320 may be disposed in front of the protruding surface portion 123. As described above, the protruding surface portion 123 is formed to protrude in a frontward direction from the lateral end of the front panel 120.

[0248] The extension 320 disposed in front of the protruding surface portion 123 may be formed to have the length smaller than that of the guide main body 310 and may be positioned to be biased in a frontward direction of the air guide 300, thereby avoiding interference with the protruding surface portion 123.

[0249] That is, the extension 320 formed in the above-described shape may provide an effect of maintaining the front aesthetics of the air guide 300 and an effect of not unnecessarily increasing the size and weight of the air guide 300 while avoiding the interference with the protruding surface portion 123.

[Positioning of Air Guide in Consideration of Front Appearance of Cooking Appliance]

[0250] FIG. 15 is a front view illustrating a portion of a front surface of the cooking appliance in a state in which the air guide is excluded, and FIG. 16 is an enlarged view of a portion of a front surface of the cooking appliance as illustrated in FIG. 15. Further, FIG. 17 is a front view illustrating a portion of a front surface of the cooking appliance according to an embodiment of the present disclosure, and FIG. 18 is an enlarged view of a portion of a front surface of the cooking appliance as illustrated in FIG. 17.

[0251] Referring to FIGS. 15 and 16, when the air guide is excluded from the cooking appliance, various portions of the cooking appliance may be exposed to a position in front of the cooking appliance through the gap (hereinafter, referred to as a "front gap") between the control panel 200 and the door 150.

[0252] For example, a portion of the front panel 120 may be exposed to a position in front of the cooking appliance through the front gap. Specifically, the plurality of exhaust ports 122 provided in the control panel 200 may be exposed to a position in front of the cooking appliance through the front gap. In addition, the partition wall 121 disposed between the exhaust ports 122 may also be exposed to a position in front of the cooking appliance through the front gap.

[0253] In addition, some disposed in rear of the exhaust ports among various electric components disposed in the electric component chamber 103 may be exposed to a position in front of the cooking appliance through the front gap.

[0254] In addition, at least a portion of the door locking device may also be exposed to a position in front of the cooking appliance through the front gap. For example, a significant portion of the latch 140 may be exposed to a position in front of the cooking appliance through the front gap. In addition, a portion of the latch driver 145 together with the latch 140 may be exposed to a position in front of the cooking appliance through the front gap.

[0255] When those described above are exposed to a position in front of the cooking appliance, they may have a poor effect on the aesthetics of the front surface of the cooking appliance. That is, the structure formed in the front panel 120 such as the exhaust port 122 and the partition wall 121, a complex-shaped structure such as the latch 140, and the like, and the electric components exposed through the exhaust port 122 may be components that may deteriorate the front aesthetics of the cooking appliance.

[0256] In order to reduce the negative effect of the components as described above on the aesthetics of the front surface of the cooking appliance, the air guide 300 may be provided in the cooking appliance, as illustrated in FIGS. 15 and 16.

[0257] The air guide 300 may be disposed in the front gap. The air guide 300 is disposed between the control panel 200 and the door 150, and may be provided to screen a portion of each of the front panel 120, the latch 140, the electric components, and the like while being positioned in front of the front panel 120, the latch 140, and the electric components.

[0258] The air guide 300 may be disposed between the control panel 200 and the door 150 so as to screen a portion of the front gap, and accordingly, a portion of each of the front panel 120, the latch 140, and the electric components which is otherwise exposed to a position in front of the cooking appliance through the front gap may be screened with the air guide 300.

[0259] As the thickness of the air guide 300 increases, the area size screened with the air guide 300 may be expanded. As the area size screened with the air guide 300 increases, the front aesthetics of the cooking appliance may be improved. However, it may be difficult for the air to be discharged to a position in front of the cooking appliance through the front space S (see FIG. 3) as the area size screened with the air guide 300 increases.

[0260] On the contrary, as the thickness of the air guide 300 becomes smaller, the area size screened with the air guide 300 may be reduced. As the area size screened with the air guide 300 is reduced, the effect of improving the aesthetics of the front surface of the cooking appliance will be reduced. However, instead, the discharge of the air to a position in front of the cooking appliance through the front space S may be more smoothly performed.

[0261] In consideration of the above facts, it is preferable that the thickness of the air guide 300 is set to the largest thickness within a range in which the discharge of the air to a position in front of the cooking appliance through the front space is smoothly performed.

[0262] When the thickness of the air guide 300 is set to satisfy the above condition, the discharge efficiency of the air through the front gap may be maintained at a certain level or greater, while the front aesthetics of the cooking appliance may be effectively improved.

[0263] According to the present embodiment, a portion of an area exposed to a position in front of the cooking appliance through the front gap may be screened with the air guide 300, thereby improving the front aesthetics of the cooking appliance.

[0264] In an example, the air guide 300 may be disposed in the front gap, and may be disposed at a center in the vertical direction of the front gap. That is, the air guide 300 may be disposed between the door 150 closing the cooking chamber and the control panel 200, and may be disposed at a position (hereinafter, referred to as a "central position") at which a vertical distance between the air guide 300 and the control panel 200 is set to be equal to a vertical distance between the air guide 300 and the door 150.

[0265] Accordingly, the air guide 300 may act as a structure that screens the front gap while being positioned at the vertical center of the front gap, that is, the central position. The air guide 300 may allow the upper area of the front gap and the lower area of the front gap to be symmetrical each other around the air guide 300, so that the front shape of the cooking appliance may be visible to the user in a more stable form, thereby contributing to improving the front aesthetics of the cooking appliance.

[0266] As described above, the air guide 300 may be coupled to the control panel 200 via the cover protrusions 210 and 220.

[0267] For example, the cover protrusions 210 and 220 may include outer cover protrusions 210.

[0268] The outer cover protrusion 210 may protrude downwardly from the lower end of the control panel 200. The outer cover protrusion 210 may be coupled to the air guide 300 disposed under the control panel 200. Due to the coupling between the outer cover protrusion 210 and the air guide 300, the air guide 300 may be spaced apart from the lower end of the control panel 200 by a predetermined distance and may be coupled to the control panel 200.

[0269] Preferably, when the outer cover protrusion 210 is coupled to the air guide 300, the air guide 300 may be disposed at the central position.

[0270] The outer cover protrusion 210 may be positioned such that at least a portion of the outer cover protrusion 210 may screen at least a portion of the latch 140 while being disposed in front thereof. For example, the outer cover protrusion 210 may protrude downwardly from the lower end of the control panel 200 and may overlap the upper portion of the latch 140 in the front-rear direction.

[0271] At least a portion of the latch 140 is screened with the outer cover protrusion 210 positioned as described above. Accordingly, in the front view, at least a portion of the latch 140 is screened with the outer cover protrusion 210 and is not visible to the viewer.

[0272] For example, the outer cover protrusion 210 may protrude from the lower end of the control panel 200 to the central position. In addition, a width of the outer cover protrusion 210 may be set to be equal to or greater than a width of the latch 140. The outer cover protrusion 210 may screen the upper half of the latch 140 exposed through the front gap while being positioned in front thereof. The lower half of the latch 140 may be disposed at a lower vertical level that that of the air guide 300 and thus may be exposed to the outside.

[0273] According to the present embodiment, a side view shape of the latch 140 may be set to have an approximately "an inverted L" shape. The latch 140 may be formed in a shape in which an upper end portion of the latch 140 protrudes in a frontward direction. Accordingly, in a front view, the upper half of the latch 140 has a more complicated shape than that of the lower half of the latch 140.

[0274] The outer cover protrusion 210 may protrude from the control panel 200 by a length required for the outer cover protrusion 210 to be coupled to the air guide 300, and may protrude from the control panel 200 by a length required for the outer cover protrusion 210 to screen the upper half of the latch 140.

[0275] That is, the outer cover protrusion 210 may not protrude by a length greater than the length by which the outer cover protrusion 210 protrudes to fix the air guide 300 at the center position and at the same time to screen the upper half of the latch 140.

[0276] If the outer cover protrusion 210 protrudes by a length greater than the length by which the outer cover protrusion 210 protrudes to fix the air guide 300 at the center position and at the same time to screen the upper half of the latch 140, the outer cover protrusion 210 may screen a larger portion of the latch 140, while the coupling structure of the outer cover protrusion 210 and the air guide 300 may become complicated or it may be difficult to couple the outer cover protrusion 210 and the air guide 300 to each other. In addition, due to an unnecessarily protruding structure, a problem in which the front aesthetics of the cooking appliance is deteriorated may also occur.

[0277] In consideration of the above fact, in the present embodiment, the outer cover protrusion 210 does not protrude by the unnecessarily increased length. Rather, the outer cover protrusion 210 may protrude by the length by which the outer cover protrusion 210 may fix the air guide 300 at the center position and at the same time, may screen the upper half of the latch 140.

[0278] The outer cover protrusion 210 may protrude to screen the upper half portion of the latch 140 capable of adversely affecting the front aesthetics of the cooking appliance, while the outer cover protrusion 210 may protrude such that the air guide 300 is disposed at the center position, thereby contributing to effectively improving the front aesthetics of the cooking appliance.

[0279] In another example, the air guide 300 may be disposed in the front gap, and may be disposed at a position further biased downwardly from the vertical center of the front gap.

[0280] In consideration of that a vertical level of eyes of the user is higher than the vertical level of the air guide 300 disposed between the door 150 and the control panel 200, the air guide 300 should be disposed at the above position so that the user may better identify the air guide 300.

[0281] In addition, when the air guide 300 is disposed at a position where the air guide 300 can be seen from the outside out of the cooking appliance, the aesthetic sense of the home appliance resulting from the air guide 300 may be more effectively expressed.

[0282] That is, the air guide 300 may be disposed at a position biased downwardly from the vertical center of the front gap, such that the aesthetic sense may be effectively expressed.

[0283] In addition, when the air guide 300 is disposed at the above defined position, the vertical dimension of the cover protrusion 210 and 220, particularly, the outer cover protrusion 210 should be increased correspondingly.

[0284] When the vertical dimension of the outer cover protrusion 200 is increased, the outer cover protrusion 210 may screen the upper half of the latch 140 and a further area thereof. As described above, the larger area size of the latch 140 may be screened with the outer cover protrusion 210, such that the front aesthetics of the cooking appliance may be more effectively improved.

[0285] In one example, in the present embodiment, the latch 140 is illustrated as being disposed at one lateral side of the main body 100 in the lateral direction. For example, in the cooking appliance, one latch 140 may be disposed at a position biased in the lateral direction to one lateral side of the main body 100. In this case, the latch 140 may be disposed closer to one lateral side of the main body 100 in the lateral direction than the exhaust port 122 may be.

[0286] According to this embodiment, a pair of outer cover protrusions 210 may be disposed between the control panel 200 and the air guide 300. The pair of outer cover protrusions 210 may be arranged symmetrically with each other around a lateral center of the cooking chamber, that is, around a lateral center of the main body 100. In other words, the pair of outer cover protrusions 210 may be arranged symmetrically with each other around the lateral center of the control panel 200.

[0287] One of the pair of outer cover protrusions 210 may be disposed in front of the latch 140 to screen the upper half of the latch 140. The other of the pair of outer cover protrusions 210 may not be disposed in front of the latch 140.

[0288] However, the pair of outer cover protrusions 210 are symmetrically arranged with each other as described above, the shape of the cover protrusions 210 and 220 and the air guide 300 exposed through the front gap may be visible to the viewer in front of the home appliance in a more balanced manner.

[0289] The cover protrusions 210 and 220 may include inner cover protrusions 220.

[0290] The inner cover protrusion 220 may protrude downwardly from the lower end of the control panel 200. The inner cover protrusion 220 may be coupled to the air guide 300 disposed under the control panel 200. Due to the coupling between the inner cover protrusion 220 and the air guide 300, the air guide 300 may be spaced apart from the lower end of the control panel 200 by a predetermined distance and may be coupled to the control panel 200.

[0291] Preferably, when the inner cover protrusion 220 is coupled to the air guide 300, the air guide 300 may be disposed at the central position.

[0292] The inner cover protrusion 220 may be disposed at a position at which at least a portion of the partition wall 121 may be screened with at least a portion of the inner cover protrusion 220 disposed in front of the partition wall 121. For example, the inner cover protrusion 220 may protrude downwardly from the lower end of the control panel 200, and may overlap the upper portion of the partition wall 121 in the front-rear direction.

[0293] At least a portion of the partition wall 121 is screened with the inner cover protrusion 220 positioned as described above. Accordingly, in the front view, at least a portion of the partition wall 121 is screened with the inner cover protrusion 220 so as not to be visible to the viewer in front of the cooking appliance.

[0294] The inner cover protrusion 220 positioned as described above may be disposed between the pair of outer cover protrusions 210. For example, among the plurality of cover protrusions 210 and 220 arranged in the lateral direction, the outer cover protrusions 210 may be respectively disposed at both outermost ends in the lateral direction, and the inner cover protrusions 220 may be disposed between the plurality of cover protrusions 210 and 220.

[0295] Due to the inner cover protrusion 220 and the outer cover protrusion 210 provided as described above, the air guide 300 may be coupled to the cover protrusions 210 and 220 at a plurality of points arranged laterally and thus may be stably fixed to the lower end of the control panel 200.

[0296] That is, the inner cover protrusion 220 may increase the number of the coupling points between the control panel 200 and the air guide 300, thereby contributing to more stably fixing the air guide 300 to the control panel.

[0297] In addition, the inner cover protrusion 220 is disposed at a position at which the partition wall 121 may be screened with the inner cover protrusion 220 disposed in front thereof, so that the number of vertical structures exposed through the front gap is not increased.

[0298] That is, the inner cover protrusion 220 may be disposed such that the inner cover protrusion 220 screens the partition wall 121 as a vertical structure exposed through the front gap. As a result, the number of vertical structures exposed through the front gap and visible to the outside may not be increased.

[0299] This may effectively prevent the front aesthetics of the cooking appliance from being degraded due to the vertical structure exposed through the front gap.

[0300] In addition, the inner cover protrusion 220 positioned as described above may be disposed at a position at which the inner cover protrusion 220 non-overlaps the exhaust port 122 in the front-rear direction. The exhaust port 122 may constitute a passage through which the air in the electric component chamber 250 (see FIG. 3) is discharged to the front space S.

[0301] The air introduced into the electric component chamber 103 under the operation of the fan 260 (see FIG. 3) may be heat-exchanged in the electric component chamber 103 and may cool the electric components. The air heat-exchanged in the electric component chamber 103 may be discharged to the front space S through the exhaust port 122 in a high temperature state.

[0302] It is assumed that the inner cover protrusion 220 is made of a plastic material. In this case, when the inner cover protrusion 220 is always exposed to the high-temperature air discharged through the exhaust port 122, the risk of thermal deformation of the inner cover protrusion 220 may be increased.

[0303] For example, if the inner cover protrusion 220 overlaps the exhaust port 122 other than the partition wall 121 in the front-rear direction, thermal deformation of the inner cover protrusion 220 may occur due to the high-temperature air discharged through the exhaust port 122.

[0304] In consideration of this fact, in the present embodiment, the inner cover protrusion 220 nonoverlaps the exhaust port 122 but overlaps the partition wall 121 in the front-rear direction.

[0305] Accordingly, the generation of thermal deformation of the inner cover protrusion 220 may be effectively prevented, and the discharge of air through the exhaust port 122 may be smoothly performed without being disturbed

by the inner cover protrusion 220.

[0306] That is, the inner cover protrusion 220 according to the present embodiment may be disposed at a position at which the inner cover protrusion 220 nonoverlaps the exhaust port 122 in the front-rear direction, thereby lowering the risk of heat deformation of the inner cover protrusion 220 without interrupting the discharge of air through the exhaust port 122, and further, improving the front aesthetics of the cooking appliance.

[0307] In summary, the effects provided by the air guide 300 and the cover protrusions 210 and 220 for fixing the air guide 300 to the control panel are as follows.

[0308] First, a portion of each of the structures exposed through the front gap may be screened with the air guide 300 as a structure that laterally extends across the front gap and screens the front gap, thereby improving the front aesthetics of the cooking appliance.

[0309] The air guide 300 covers a portion of each of other structures in rear of the air guide 300, and at the same time, allows a line of sight of the user that views the front gap to be concentrated on the air guide 300, thereby providing an effect that it seems like that only the air guide 300 is present in the front gap.

[0310] Further, the air guide 300 may constitute the structure that screens the front gap while being disposed at the central position of the front gap so that the upper area of the front gap and the lower area of the front gap are symmetrical to each other, and thus the front shape of the cooking appliance may be visible to the user in a more stable and balanced form.

[0311] Accordingly, the air guide 300 may contribute to effectively improving the front aesthetics of the cooking appliance.

[0312] Second, at least a portion of a large complex structure such as the latch 140 is screened with the outer cover protrusion 210, so that the front aesthetics of the cooking appliance can be more effectively improved.

[0313] According to the present embodiment, the upper half of the latch 140 which may affect the adverse effect on the front aesthetics of the cooking appliance may be screened with the outer cover protrusion 210 provided to fix the air guide 300 to the control panel.

[0314] That is, since the position of the outer cover protrusion 210 provided to fix the air guide 300 to the control panel is set to a position overlapping the latch 140 in the front-rear direction, the stable fixing of the air guide 300 and the improvement of the front aesthetics of the cooking appliance may be achieved together.

[0315] Third, the inner cover protrusion 220 is disposed at a position so as to screen the partition wall 121 distinguishing the exhaust ports 122 from each other while being positioned in front of the partition wall 121, thereby reducing the risk of thermal deformation of the inner cover protrusion 220 without interrupting the discharge of air through the exhaust port 122 and further improving the front aesthetics of the cooking appliance.

[Coupling Structure Between Control Panel and Air Guide]

[0316] FIG. 19 is a cross-sectional perspective view illustrating a coupling structure between the air guide and the control panel, and FIG. 20 is a cross-sectional exploded perspective view illustrating a removed state of the air guide and the control panel as illustrated in FIG. 19 from each other. Further, FIG. 21 is a perspective view illustrating another example of the air guide as illustrated in FIG. 13, and FIG. 22 is a cross-sectional exploded perspective view illustrating a coupling structure between the air guide and the control panel as illustrated in FIG. 21

[0317] Referring to FIGS. 13 and 17 to 20, the cover protrusions 210 and 220 may be included in the front panel 120. For example, the cover protrusions 210 and 220 may be integrally formed with the control panel 120. More specifically, the cover protrusions 210 and 220 may be integrally formed with the lower end of the control panel 200.

[0318] In this embodiment, the lower end of the control panel 200 and the cover protrusions 210 and 220 may be made of a plastic material. The cover protrusions 210 and 220 are integrally formed with the lower end of the control panel 200, and the cover protrusions 210 and 220 and the lower end of the control panel 200 may be monolithic and may be made of the plastic material, Thus, a cost required for the addition of the cover protrusions 210 and 220 may be reduced, and the weight of the cover protrusions 210 and 220 may be considerably lowered compared to a case when the cover protrusions 210 and 220 are made of a metal material.

[0319] The air guide 300 may be made of a metal material. In an example, the air guide 300 may be made of a metal material having excellent heat resistance and metal-specific gloss. The air guide 300 may not be easily deformed even under high-temperature heat, may not be easily damaged even when an impact is applied thereto, and may contribute to improving the aesthetics of the cooking appliance due to the metal gloss.

[0320] In this embodiment, the air guide 300 may be made of the metal material in consideration of the fact that the air guide 300 is disposed at a path through which high-temperature air is discharged, the air guide 300 is disposed at a position on the front surface of the cooking appliance so as to be visible to the user, and the contact of the air guide 300 with the user frequently occurs.

[0321] The cover protrusions 210 and 220 may be coupled to the guide main body 310. A hollow may be formed in each of the cover protrusions 210 and 220, and a coupling hole communicating with the hollow may be formed to extend through the guide main body 310 in the vertical direction. The cover protrusions 210 and 220 and the guide main body 310 may be

coupled to each other via a fastening member 201 such as a screw.

[0322] In another example, as illustrated in FIGS. 21 and 22, cover protrusions 330 and 340 may be included in an air guide 300a. For example, the cover protrusions 330 and 340 may be integrally formed with the air guide 300a.

[0323] In this embodiment, the cover protrusions 330 and 340 and a main body of the air guide 300a are illustrated as being made of a metal material. In an example, the main body of the air guide 300 and the cover protrusions 330 and 340 may be made of a metal material having excellent heat resistance and metal-specific gloss.

[0324] As described above, since the cover protrusions 330 and 340 are integrally formed with the air guide 300a and are monolithic and are made of the metal material, the cover protrusions 330 and 340 may not be easily deformed even under high-temperature heat.

[0325] In addition, since all of the cover protrusions 330 and 340 and the air guide 300a as most of the structures exposed through the front gap are made of the metal material having metal gloss, the aesthetics of the cooking appliance may be more effectively improved.

[Position of Air Guide in Consideration of Air Discharge Flow]

[0326] FIG. 23 is a cross-sectional view illustrating an air flow inside the cooking appliance according to an embodiment of the present disclosure, FIG. 24 is an enlarged view of a portion of the cooking appliance as illustrated in FIG. 23, and FIG. 25 is an enlarged view of a portion of the cooking appliance as illustrated in FIG. 24.

[0327] Referring to FIGS. 23 to 26, external air may be introduced from a rear side of the cooking appliance into the electric component chamber 103 under the operation of the fan module 170. As described above, the air introduced into the electric component chamber 103 may flow in a frontward direction inside the electric component chamber 103 and may cool the electric components inside the electric component chamber 103.

[0328] More specifically, the external air may be introduced into the cooking appliance through a lower end of the main body 100. The external air introduced through the lower end of the main body 100 may cool various components disposed in the rear space of the cooking appliance, for example, a motor for driving the convection unit 160 while flowing through the rear space of the cooking appliance in which the convection unit 160 and the like are disposed.

[0329] The air flowing upward while flowing through the rear space of the cooking appliance may flow toward the electric component chamber 103 through a space covered with the electric component chamber cover 135 and defined between the rear space of the cooking appliance and the electric component chamber 103.

[0330] The air having flowed into the electric component chamber 103 may be suctioned by the fan module 170 and introduced into the cooling flow path 105. The air introduced into the cooling flow path 105 may flow in a frontward direction in the cooling flow path 105 and may cool the electric components in the electric component chamber 103.

[0331] As described above, the air having flowed in a frontward direction in the electric component chamber 103 may be discharged to a position in front of the electric component chamber 103, that is, the front space S through the exhaust port 122.

[0332] In addition, the air in the door 150 heated by the heat transferred from the cooking chamber 101 during the cooking process may be discharged to the outside out of the door 150 through the door exhaust port 152 defined in the upper end of the door 150.

[0333] As the hot air inside the door 150 is discharged, the external air in the lower end of the front portion of the cooking appliance may be introduced into the door 150 through an air flow hole defined in the lower end of the door 150 and may flow upwardly therein. In this process, the door 150 heated by the heat transferred from the cooking chamber 101 to the door 150 may be cooled by the air.

[0334] In addition, the air rising in the door 150 while cooling the door 150 may be discharged to the front space S through the door exhaust port 152. That is, the air discharged through the exhaust port 122 and the air discharged through the door exhaust port 152 may merge with each other in the front space S and then may be discharged to a position in front of the cooking device.

[0335] According to the present embodiment, the front space S may be a space surrounded with the door 150, the front panel 120, and the control panel 200. The air guide 300 may be disposed in the front space S.

[0336] The exhaust port 122 may communicate with the front space S while being disposed in rear of the front space S. The door exhaust port 152 may communicate with the front space S while being disposed under the front space S. In addition, the front space S may be opened toward a position in front of the cooking appliance.

[0337] The door exhaust port 152 may be disposed between the air guide 300 and the front panel 120. Specifically, the door exhaust port 152 may be disposed in front of the exhaust port 122. That is, in the front-rear direction, the door exhaust port 152 may be disposed between the air guide 300 and the exhaust port 122.

[0338] In addition, the door exhaust port 152 may be disposed under the air guide 300 and the exhaust port 122. In addition, the door exhaust port 152 may be defined in the upper end of the door 150, and may be defined in the second half 150b thereof.

[0339] Accordingly, the door exhaust port 152 may be disposed at a position biased rearwardly in the door 150, and may

be disposed at a lower vertical level than a vertical level of an uppermost end of the door 150 constituted by the front half portion 150a.

[0340] Referring to the arrangement relationship between the exhaust port 122, the door exhaust port 152, and the air guide 300, the door exhaust port 152 is disposed at a position in the door 150 closest to the exhaust port 122 in the front-rear direction.

[0341] If the door exhaust port 152 is disposed in the front half portion 150a rather than the rear portion 150b of the door 150, the possibility that the hot air discharged through the exhaust port 122 flows back into the door 150 through the door exhaust port 152 is increased.

[0342] The air discharged through the exhaust port 122 gradually diffuses in the front space S and flows the front space S in a frontward direction. That is, the air discharged through the exhaust port 122 may flow in a frontward direction while being spread in the vertical direction as well as the left-right direction in the front space S.

[0343] Therefore, as the door exhaust port 152 is located at a front side in the front space S, the possibility that the air discharged through the exhaust port 122 is introduced into the door exhaust port 152 is increased. When the hot air discharged through the exhaust port 122 flows back into the door 150 through the door exhaust port 152, cooling of the door 150 may not be smoothly performed, and the heat introduced into the front space S may not be smoothly discharged to the outside out of the cooking device.

[0344] In consideration of this fact, in the present embodiment, the door exhaust port 152 may be disposed in the rear portion 150b of the door 150, and thus, the door exhaust port 152 may be disposed at a position in the door 150 closest to the exhaust port 122 in the front-rear direction.

[0345] Accordingly, the door exhaust port 152 may be disposed at a position which may be furthest from the flow area in which the air discharged through the exhaust port 122 flows, among possible positions in the front-rear direction in the door 150.

[0346] In addition, according to the present embodiment, the door exhaust port 152 may be disposed in the rear half portion 150b, and thus may be disposed at a lower vertical level than that of the uppermost end of the door 150 constituted by the front half portion 150a. That is, the door exhaust port 152 may be disposed at a position farther downwardly from the flow area in which the air discharged through the exhaust port 122 flows.

[0347] Accordingly, the door exhaust port 152 may be disposed at a position which may be furthest from the flow area in which the air discharged through the exhaust port 122 flows. The door exhaust port 152 positioned as described above may contribute to preventing the hot air discharged into the front space S from flowing backward into the door 150.

[0348] In addition, the door exhaust port 152 may not overlap the air guide 300 in the vertical direction, but may be disposed in rear of the air guide 300 in the front-rear direction. Accordingly, the flow of air discharged from the door exhaust port 152 may smoothly flow toward the front space S without being disturbed by the air guide 300.

[0349] According to this embodiment, the door exhaust port 152 may be disposed between the air guide 300 and the front panel 120. That is, the air guide 300 may be disposed in front of the exhaust port 122 and the door exhaust port 152. The air guide 300 may be disposed at a position biased in a frontward direction in the front space S.

[0350] The air guide 300 positioned as described above may guide the flow of air discharged from the exhaust port 122 and the door exhaust port 152 to the front space S toward a position in front of the front space S.

[0351] For example, the air discharged from the exhaust port 122 and air discharged from the door exhaust port 152 to the front space S may merge with each other in the front space S and then be discharged to a position in front of the cooking appliance. The air guide 300 may be disposed in a flow path (hereinafter, referred to as an "air discharge flow path") along which the air discharged from the front space S flows to a position in front of the cooking appliance.

[0352] The air guide 300 positioned as described above may be provided in the form of a frame having a width greater than each of a length and a thickness and having a thickness smaller than each of a length and a width. In addition, the air guide 300 disposed at the central position of the front gap may be disposed at the center in the vertical direction of the front space S.

[0353] The air guide 300 may be disposed in the air discharge flow path to partition the air discharge flow path into an upper portion and a lower portion. Accordingly, the air introduced into the front space S through the exhaust port 122 and the door exhaust port 152 may be divided into upper and lower portions while flowing through the air discharge flow path partitioned into the upper portion and the lower portion and the upper and lower portions of the air flow in a frontward direction in a separate manner.

[0354] When the flow of air discharged from the exhaust port 122 and the flow of air discharged from the door exhaust port 152 merge with each other in the front space S, the vortex may occur in the front space S.

[0355] When the vortex is generated in the front space S, the air introduced into the front space S may not be properly discharged to the outside out of the cooking appliance, or the air in the front space S may flow back into the door 150 through the door exhaust port 152.

[0356] In consideration of this fact, in the present embodiment, the air guide 300 is disposed at the front side of the front space S, and the flow of air flowing through the air discharge flow path is divided into the upper and lower portions by the air guide 300.

[0357] As described above, when the flow of air in the front space S is divided into the upper and lower portions by the air guide 300, and then the upper and lower portions flow in the separate manner, the possibility at which the vortex is generated in the front space S may be significantly reduced.

[0358] That is, the air guide 300 disposed in the front space S and at the front side of the front space S may be disposed in the air discharge flow path to divide the flow of air flowing through the air discharge flow path into the separate upper and lower portions, thereby effectively suppressing the generation of the vortex in the front space S.

[0359] In addition, the inner cover protrusion 220 provided to fix the air guide 300 to the control panel 200 may be disposed between the exhaust port 122 and the exhaust port 122.

[0360] The inner cover protrusion 220 positioned as described above may screen the partition wall 121 while being disposed in front of the partition wall 121. The inner cover protrusion 220 may be disposed at a position at which the inner cover protrusion 220 does not overlap the exhaust port 122 in the front-rear direction, thereby effectively lowering a flow path resistance caused by the cover protrusions 210 and 220 or the air guide 300.

[0361] In addition, as described above, a front end 301 of the air guide 300 disposed in the front space S and at the front side of the front space S may be disposed at a position vertically overlapping at least a portion of the front glass 153 of the door 150.

[0362] For example, the front end 301 of the air guide 300 may coincide with a rear end of the front glass 152 in the front-rear direction, or may be disposed at a position positioned in a frontward direction beyond the rear end of the front glass 152.

[0363] Since the air guide 300 is disposed at a position biased in a frontward direction in the front space S, the flow of air flowing from the front space S toward a position in front of the cooking appliance may be more effectively guided by the air guide 300.

[0364] In addition, since the air guide 300 is disposed at a position where the air guide 300 is visible to the outside out of the cooking appliance as described above, an esthetic sense resulting from the air guide 300 may be more effectively expressed.

[0365] In the process in which hot air is discharged from the front space S, a portion of the discharged air may contact the lower end of the control panel 200, and thus condensed water may be deposited on the lower end of the control panel 200.

[0366] As described above, when the condensed water deposited on the lower end of the control panel 200 falls down onto the upper end of the door 150, the water may collide with the door 150 and may bounce therefrom toward the surroundings around the door 150 to contaminate the surroundings.

[0367] When, as described above, the air guide 300 is disposed at a position biased in a frontward direction in the front space S, the air guide may block the space between the control panel 200 and the door 150 so that the condensate or the condensed water deposited on the lower end of the control panel 200 does not fall onto the door 150.

[0368] Since a distance between the control panel 200 and the air guide 300 is much smaller to a distance between the control panel 200 and the door 150, an amount of the water splashed to the surroundings around the air guide 300 is not large even when the condensed water drops onto the air guide 300.

[0369] That is, due to the air guide 300 having the above-described configuration, the occurrence of the contamination of the cooking appliance due to the condensed water may be significantly reduced.

[0370] In addition, the rear end 303 of the air guide 300 may be disposed in front of the door exhaust port 152 in the front-rear direction.

[0371] Accordingly, a passage having a sufficient height for discharging the air inside the door 150 to the front space S through the door exhaust port 152 may be formed between the door exhaust port 152 and the air guide 300.

[0372] Accordingly, the air discharged from the door exhaust port 152 may be sufficiently mixed with the air discharged from the exhaust port 112 in the front space S, and then the mixed air may flow through an area in which the air guide 300 is disposed.

[0373] In addition, when the rear end 300 of the air guide 300 is disposed at the above defined position, the air guide 300 may not be an obstacle disposed on top of the door exhaust port 152. Due to the air guide 300, the flow path resistance around the door exhaust port 152 may be effectively reduced.

[0374] More specifically, the rear end 303 of the air guide 300 may be disposed in front of the rear half portion or the rear half portion 150b of the door 150 in the front-rear direction.

[0375] When the position of the rear end 303 of the air guide 300 is set as described above, a distance between the air guide 300 and the door exhaust port 152 required to allow the air discharged from the door exhaust port 152 to smoothly flow may be sufficiently secured.

[0376] In another example, the front end 301 of the air guide 300 may coincide with at least one of the front end of the control panel 200 and the front end of the door 150 in the front-rear direction.

[0377] For example, in the side view, the front end 301 of the air guide 300 and the front lower edge of the control panel 200 may be aligned with each other in the same line. In addition, in the side view, the front end 301 of the air guide 300 and a front upper edge of the door 150 may be aligned with each other in the same line.

[0378] As the air guide 300 is positioned as described above, the positions of the control panel 200, the air guide 300, and

the door 150 may be aligned with each other, such that the appearance of the cooking appliance may be visible to the user in the more balanced manner, thereby further improving the aesthetics of the cooking appliance.

[0379] As described above, the air guide 300 is positioned in the front space S so as to be biased toward the front side of the front space S, thereby improving the aesthetics of the cooking appliance.

[0380] That is, the air guide 300 according to the present embodiment may be positioned in the front space S so s to be biased toward the front side of the front space S, thereby providing an effect of suppressing the vortex generation in the front space S and an effect of improving the aesthetics of the cooking appliance.

[0381] Although the present disclosure has been described with reference to the embodiments illustrated in the drawings, the embodiments are merely examples. It may be appreciated that those skilled in the art may made various modifications and other equivalent embodiments therefrom. Accordingly, the true technical protection scope of the present disclosure should be defined by following claims.

Reference numerals

100:	Main body	151:	Door frame
110:	Cavity	151a:	Catching groove
120:	Front panel	152:	Door exhaust port
121:	Partition wall	153:	Front glass
122:	Exhaust port	154:	Inner glass
124:	Latch hole	155:	Handle
130:	Cooking chamber	160:	Convection unit
131:	Upper panel	200:	Control panel
132:	Air inlet hole	201:	Fastening member
133:	Electric component chamber cover	210 and 330:	Outer cover protrusion
135:	Cooling flow path cover	220 and 340:	Inner cover protrusion
140:	Latch	250:	Electric component chamber
145:	Latch driver	255:	Cooling flow path
150:	Door	260:	Fan
150a:	First half portion	300:	Air guide
150b:	Second half portion	310:	Guide body
		320:	Extension
		S:	Front space

Claims

1. A cooking appliance comprising:

a cavity having a cooking chamber defined therein and having an open front surface;
a door disposed in front of the cavity to open and close the cooking chamber;
a control panel disposed on top of the cavity and the door;
a front panel disposed between the cavity and the door; and
an air guide disposed in front of the front panel so as to screen at least a portion of the front panel, wherein the air guide is disposed between the door and the control panel.

2. The cooking appliance of claim 1, further comprising a cover protrusion protruding downwardly from a lower end of the control panel,
wherein the air guide is spaced apart from the lower end of the control panel and is coupled to the control panel via the cover protrusion.

3. The cooking appliance of claim 1, further comprising a plurality of inner cover protrusions protruding downwardly from a lower end of the control panel,

wherein a plurality of exhaust ports are formed in the front panel, and are spaced apart from each other by a predetermined distance in a lateral direction,
wherein a partition wall is formed between two adjacent exhaust ports,

wherein the inner cover protrusion is disposed in front of each partition wall so as to screen each partition wall.

4. The cooking appliance of claim 1, further comprising:

a latch disposed in the cavity and selectively engaged with the door; and
an outer cover protrusion protruding downwardly from a lower end of the control panel,
wherein at least a portion of the latch is exposed to a position in front of the front panel,
wherein the outer cover protrusion is disposed in front of the latch and screens at least a portion of the latch.

5. The cooking appliance of claim 1, wherein the air guide is disposed in a front space surrounded with the door, the front panel, and the control panel.

6. The cooking appliance of claim 5, wherein a door exhaust port configured to communicate an inner space of the door with the front space is formed in an upper end of the door facing the control panel,
wherein the door exhaust port is disposed between the air guide and the front panel in a front-rear direction.

7. The cooking appliance of claim 6, wherein an electric component chamber is disposed on top of the cavity,

wherein at least a portion of the front panel is disposed in front of the electric component chamber,
wherein an exhaust port for communicating an inner space of the electric component chamber with the front space is formed in the front panel,
wherein the door exhaust port is disposed between the air guide and the exhaust port of the front panel in the front-rear direction.

8. The cooking appliance of claim 7, wherein the lower end of the control panel and the cover protrusion are formed integrally with each other and are made of a plastic material,
wherein the air guide is made of a metal material.

9. The cooking appliance of claim 5, wherein a door exhaust port configured to communicate an inner space of the door with the front space is formed in an upper end of the door facing the control panel,

wherein the door is divided into a first half portion and a second half portion arranged in a front-rear direction,
wherein the door exhaust port is disposed in the second half portion disposed in rear of the first half portion.

10. The cooking appliance of claim 5, wherein the air guide divides at least a portion of the front space into an upper space and a lower space.

FIG. 1

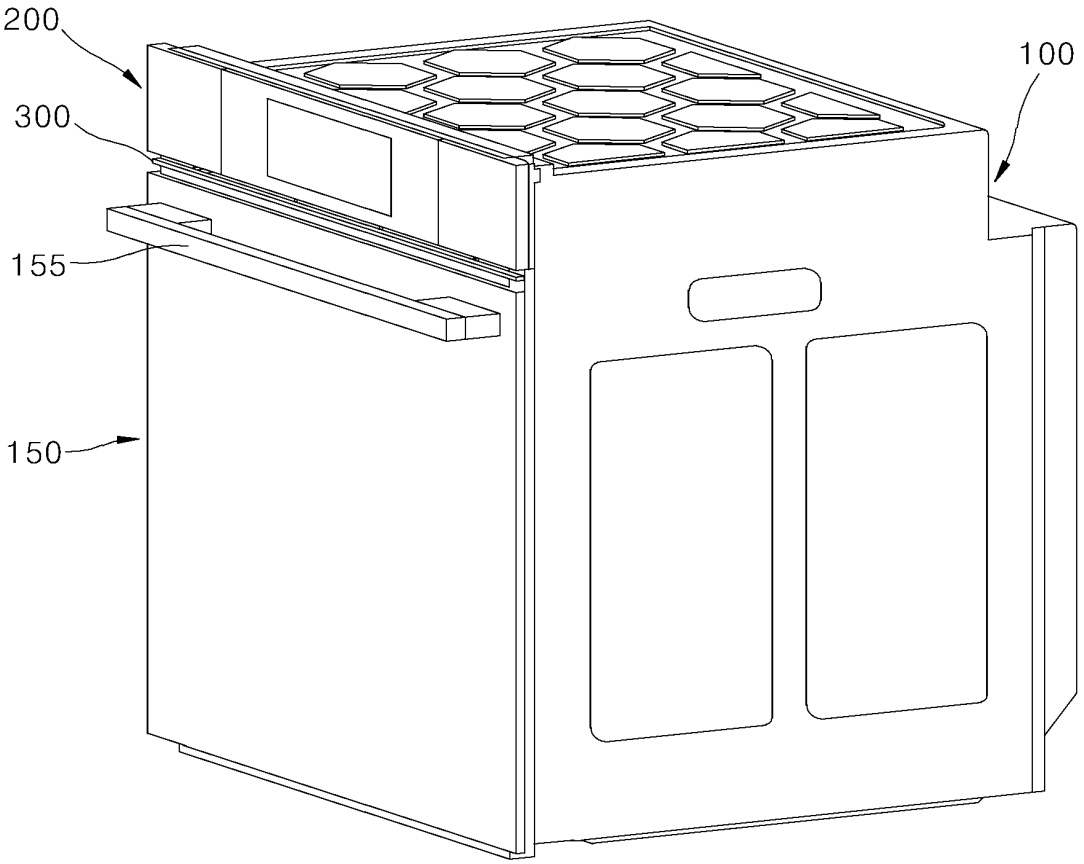
200
300
155
150
100

FIG. 2

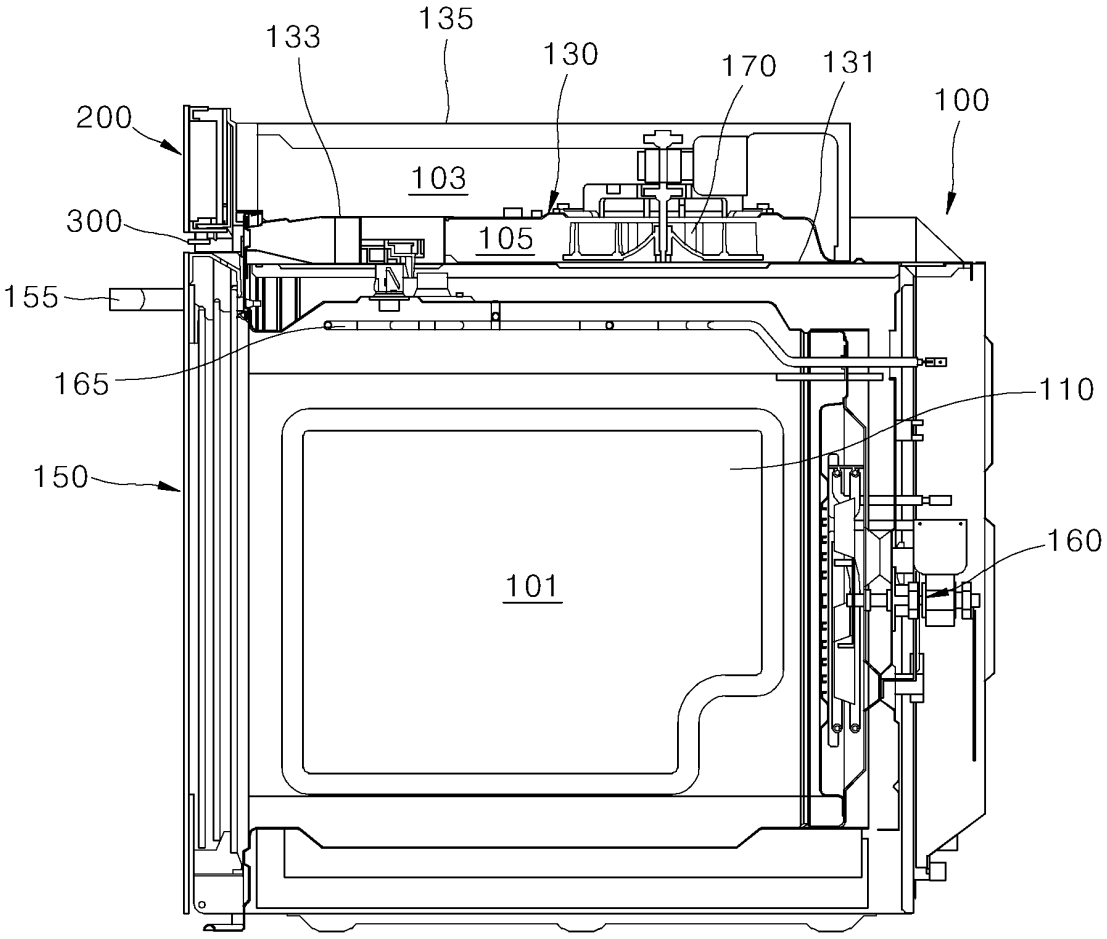
133
135
130
170
131
100
200
103
300
105
155
165
110
150
101
160

FIG. 3

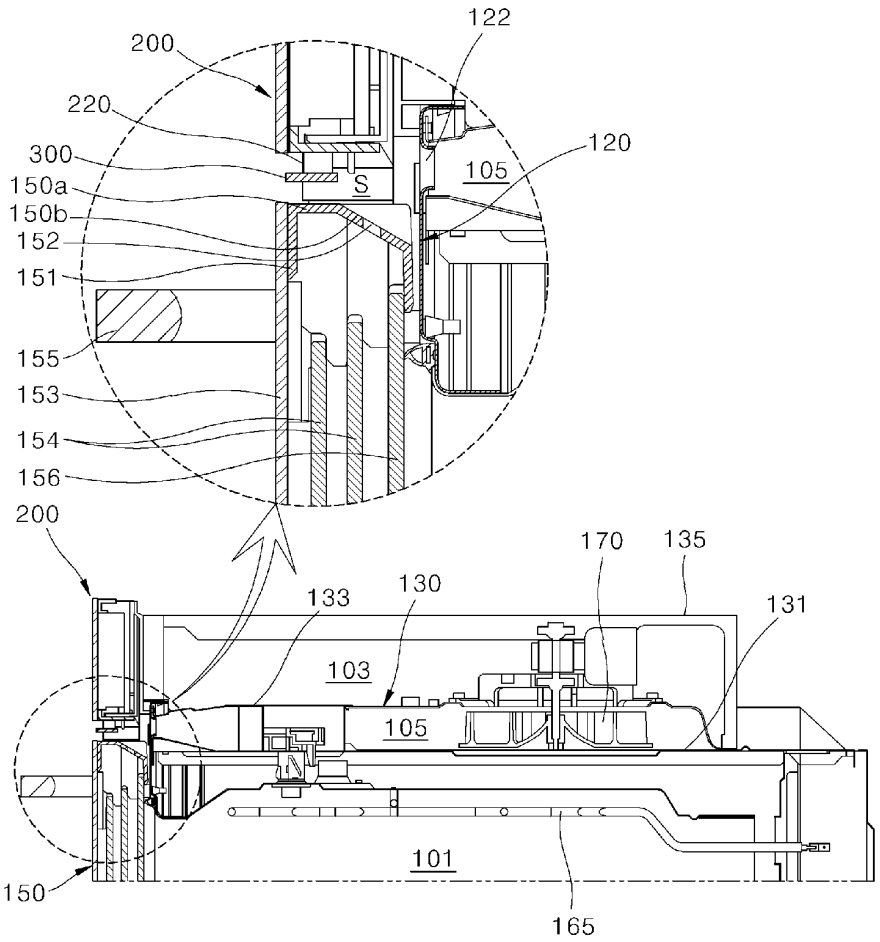
122
200
220
120
300
105
S
150a
150b
152
151
155
153
154
156
200
170
135
133
130
131
103
105
101
150
165

FIG. 4

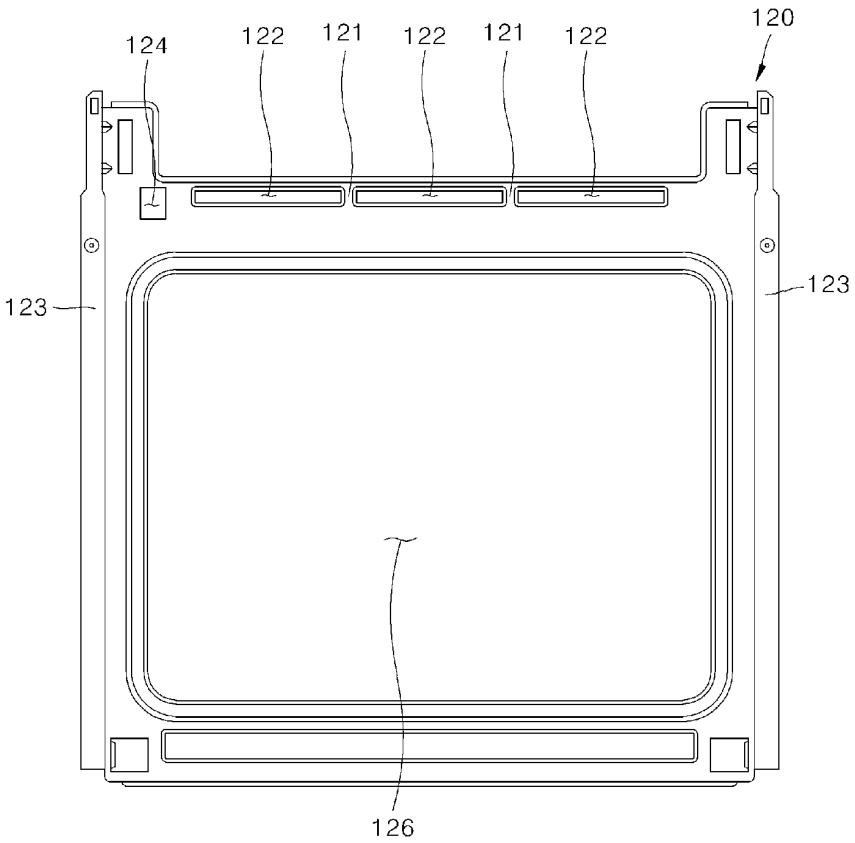
120
124
122
121
122
121
122
123
123
126

FIG. 5

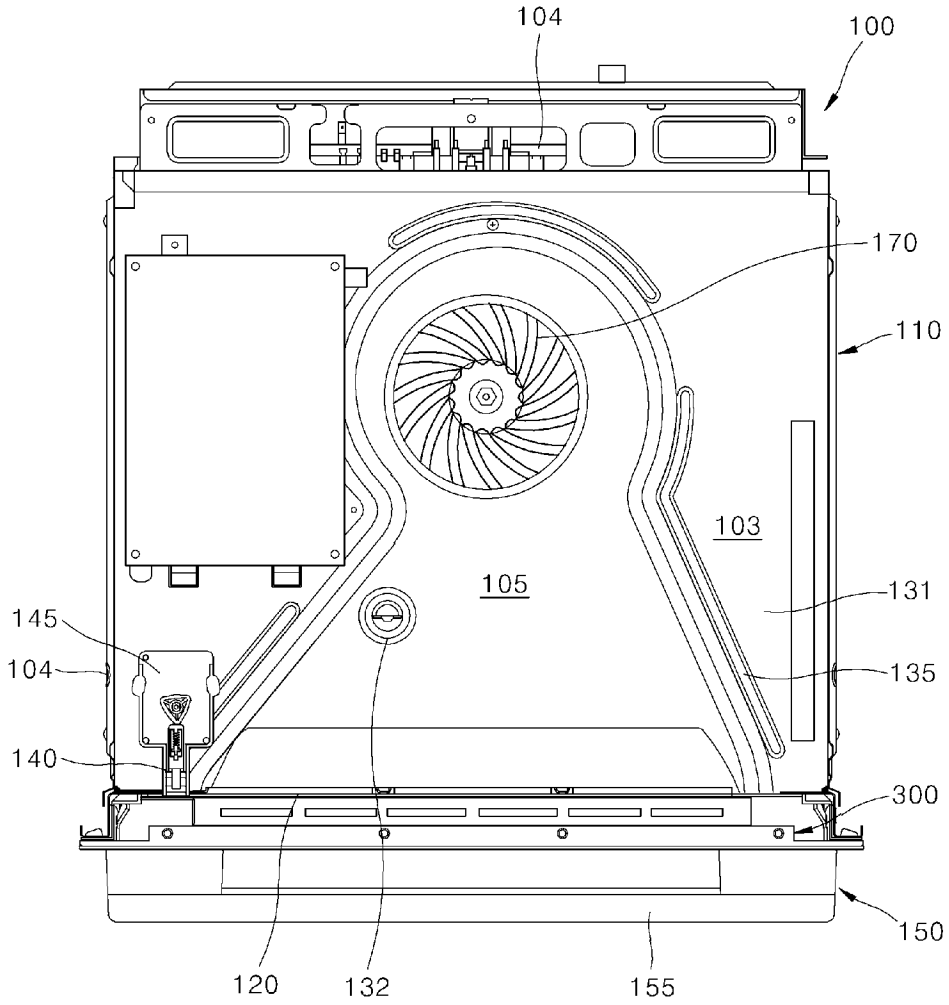
104
100
170
110
103
105
131
145
104
135
140
300
150
120
132
155

FIG. 6

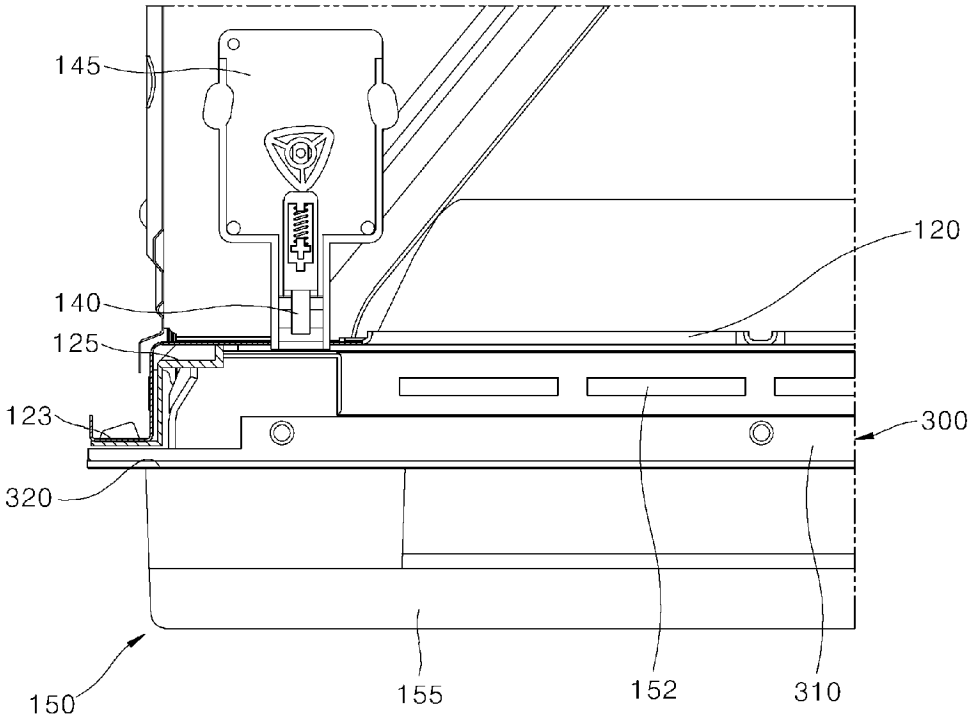
145
120
140
125
123
300
320
150
155
152
310

FIG. 7

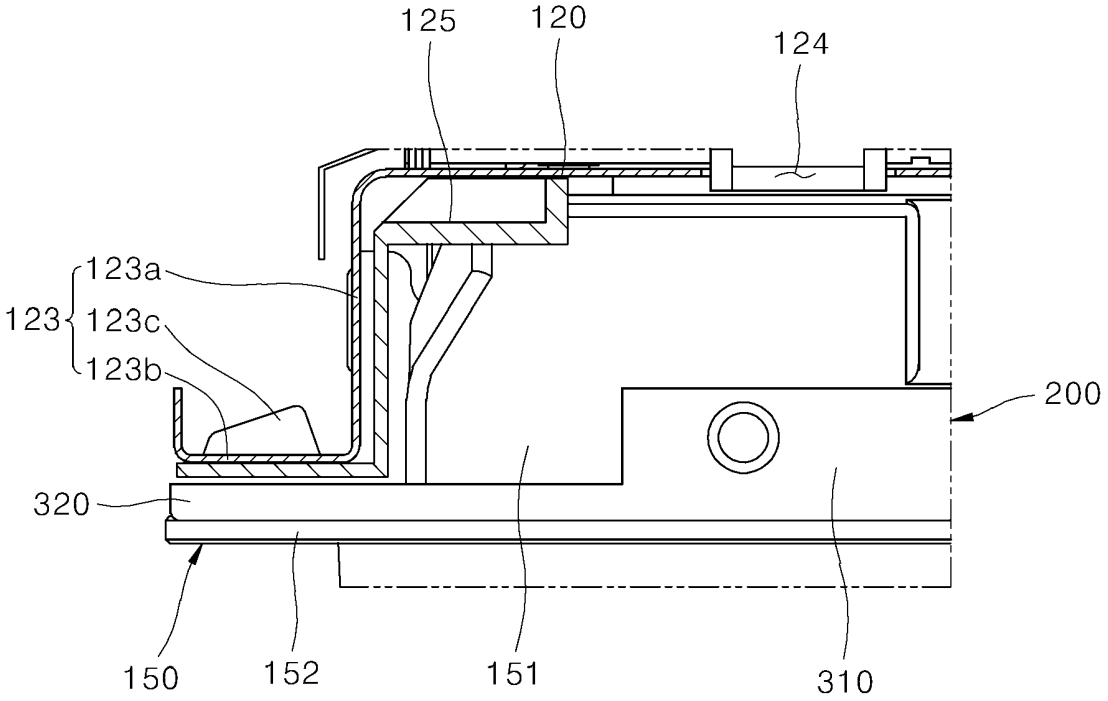
125
120
124
123a
123
123c
123b
200
320
150
152
151
310

FIG. 8

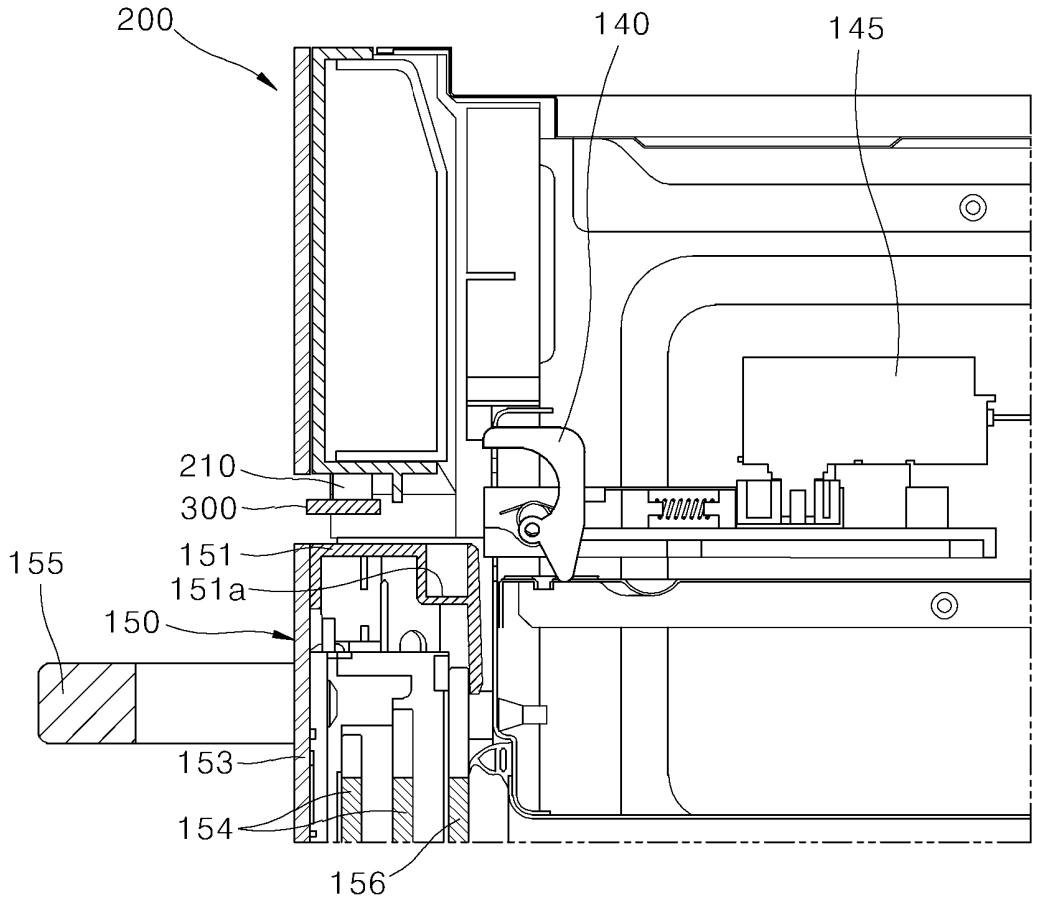
200
140
145
210
300
151
155
151a
150
153
154
156

FIG. 9

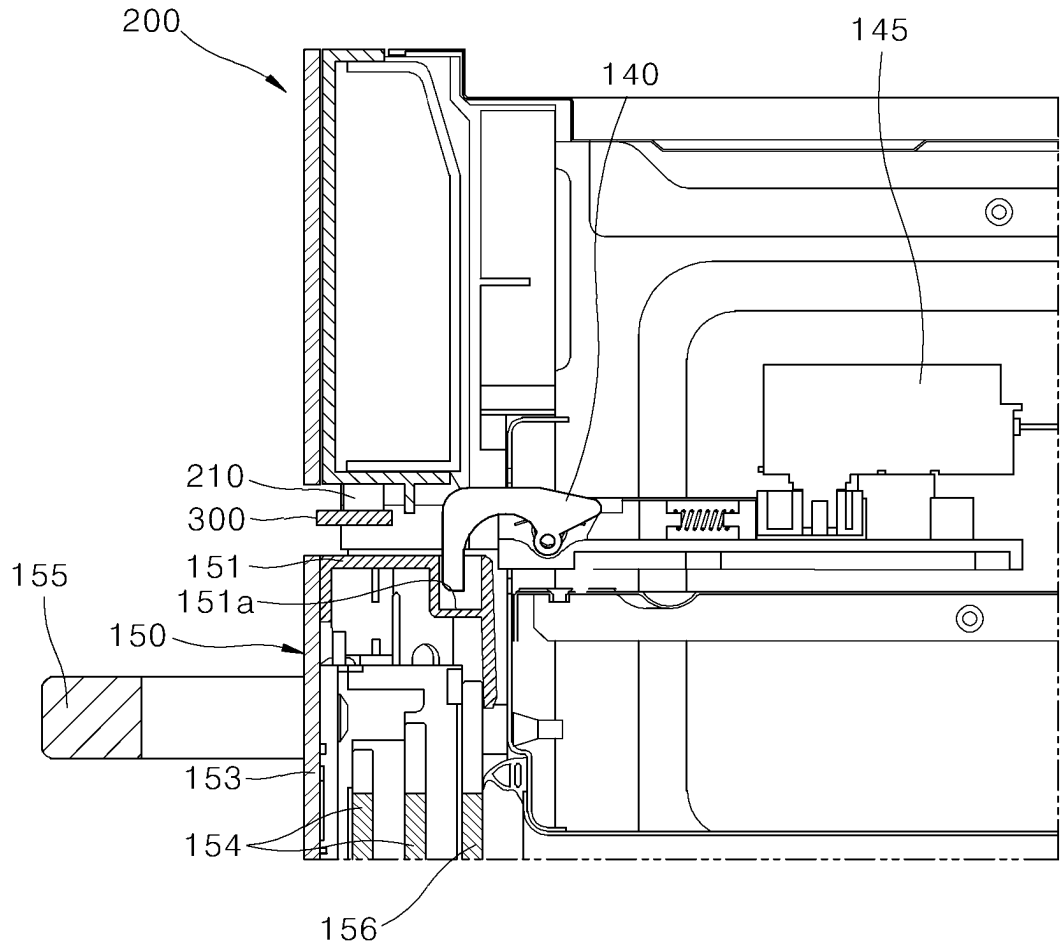
200
145
140
210
300
151
151a
155
150
153
154
156

FIG. 10

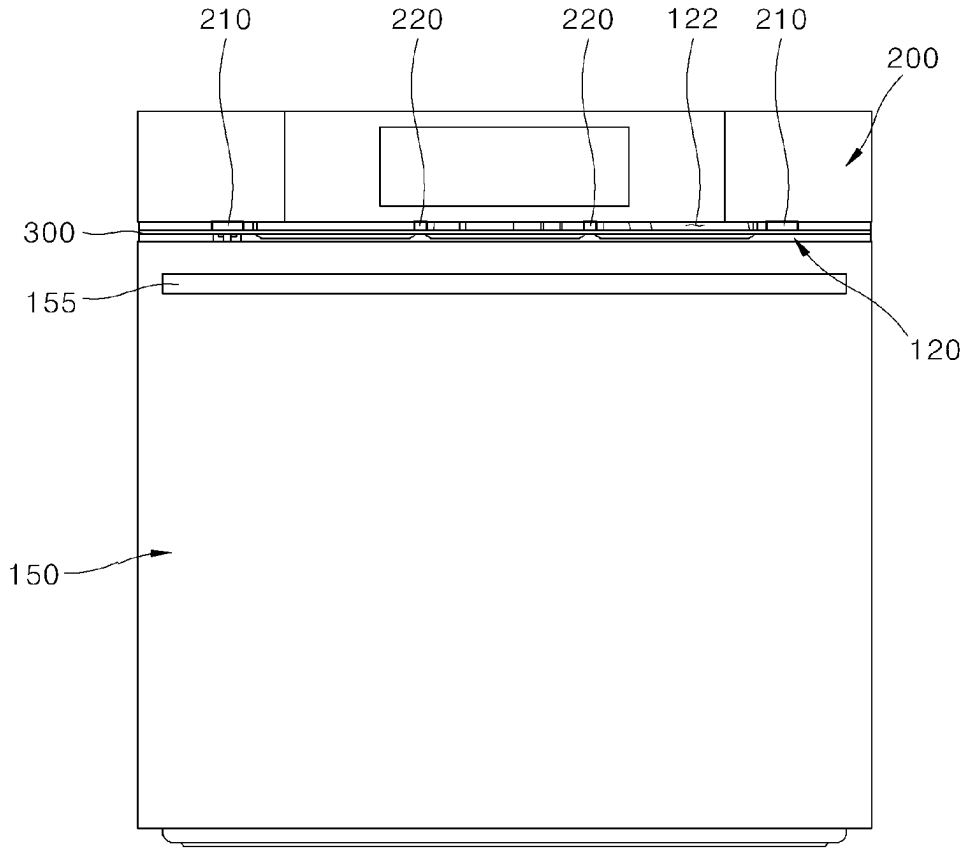
210
220
220
122
210
200
300
155
120
150

FIG. 11

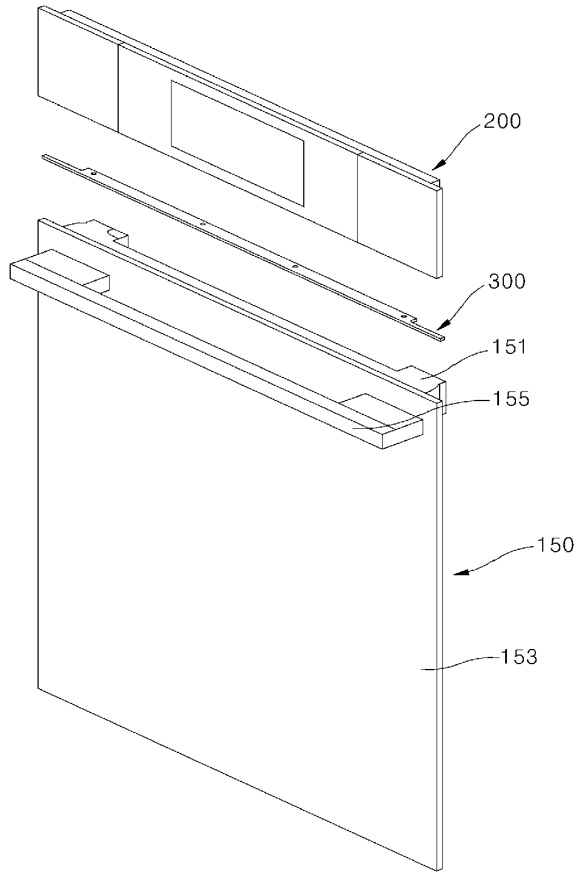
200
300
151
155
150
153

FIG. 12

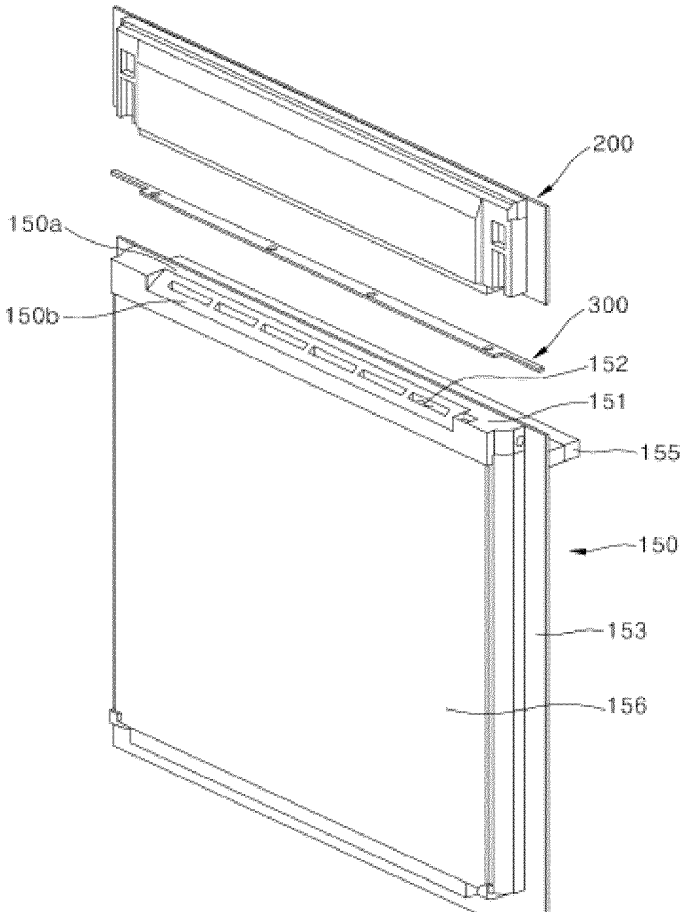
200
150a
150b
300
152
151
155
150
153
156

FIG. 13

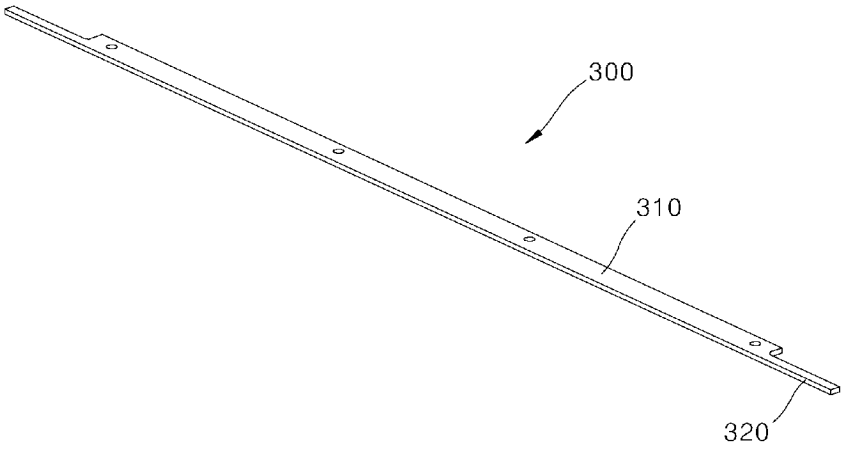

FIG. 14

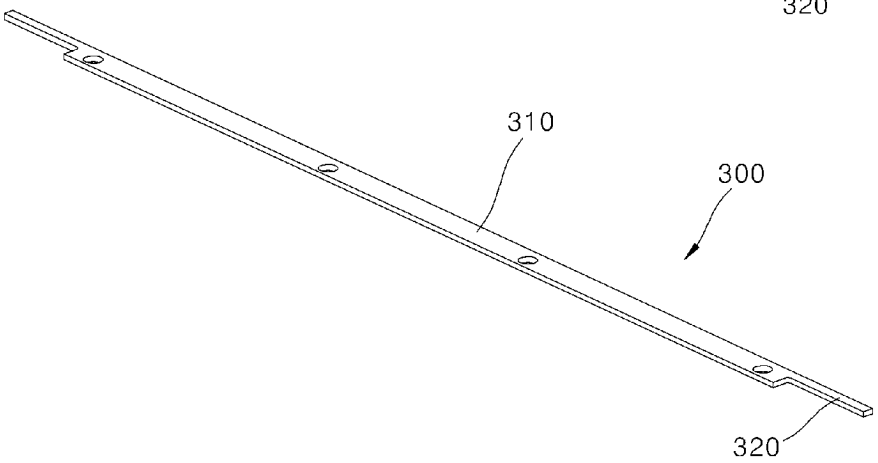

FIG. 15

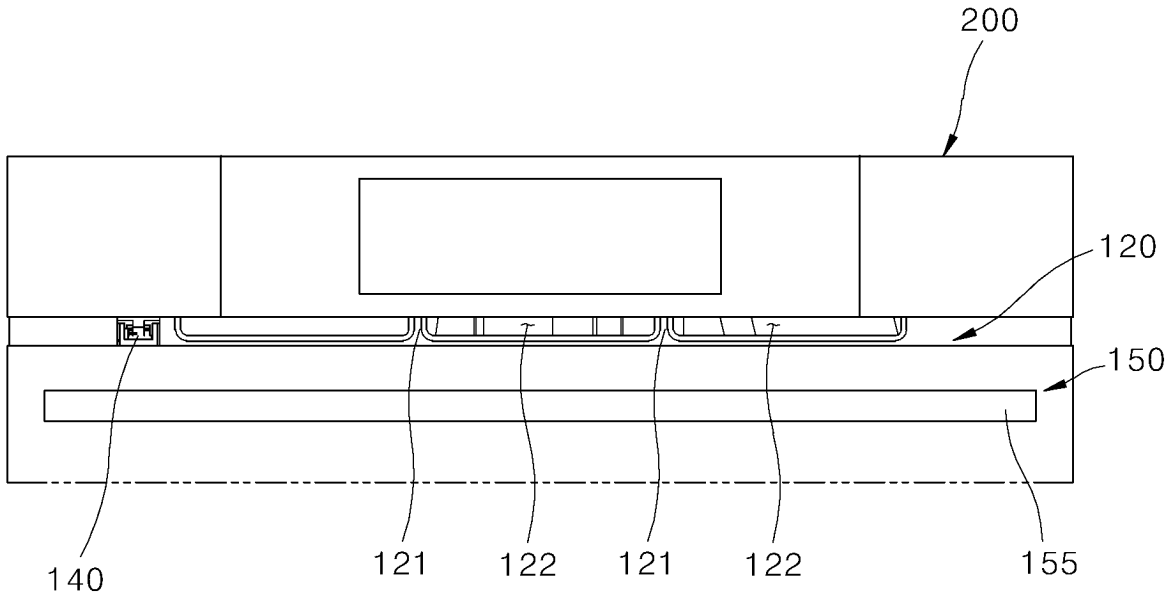

FIG. 16

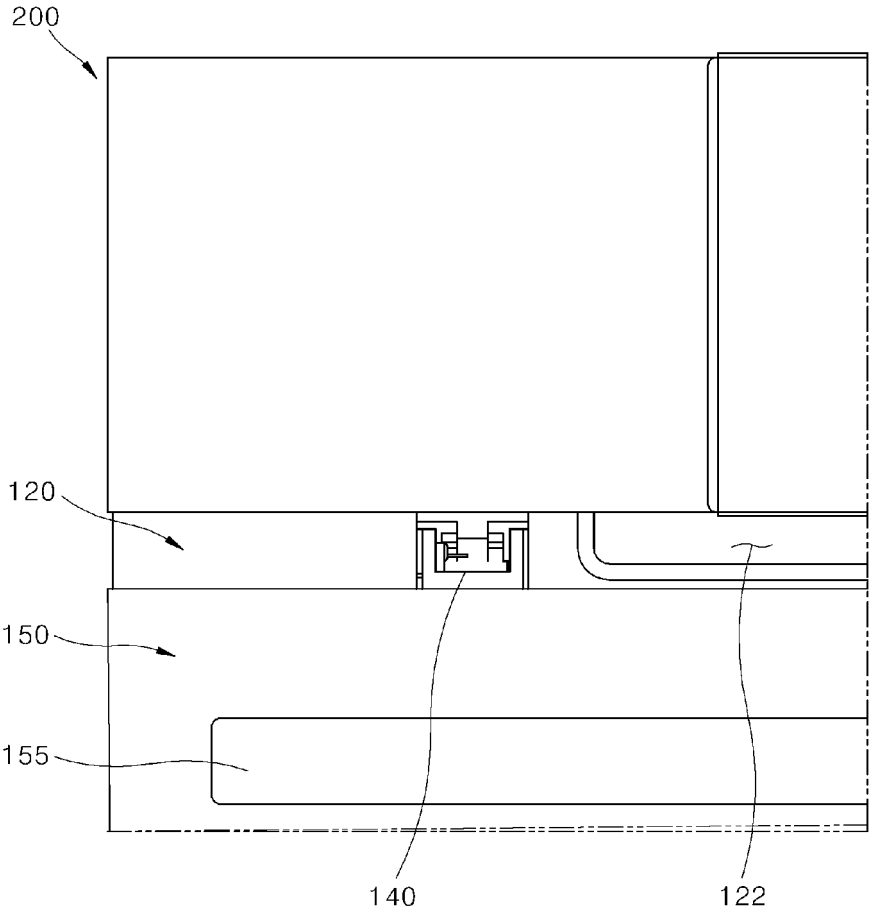
200
120
150
155
140
122

FIG. 17

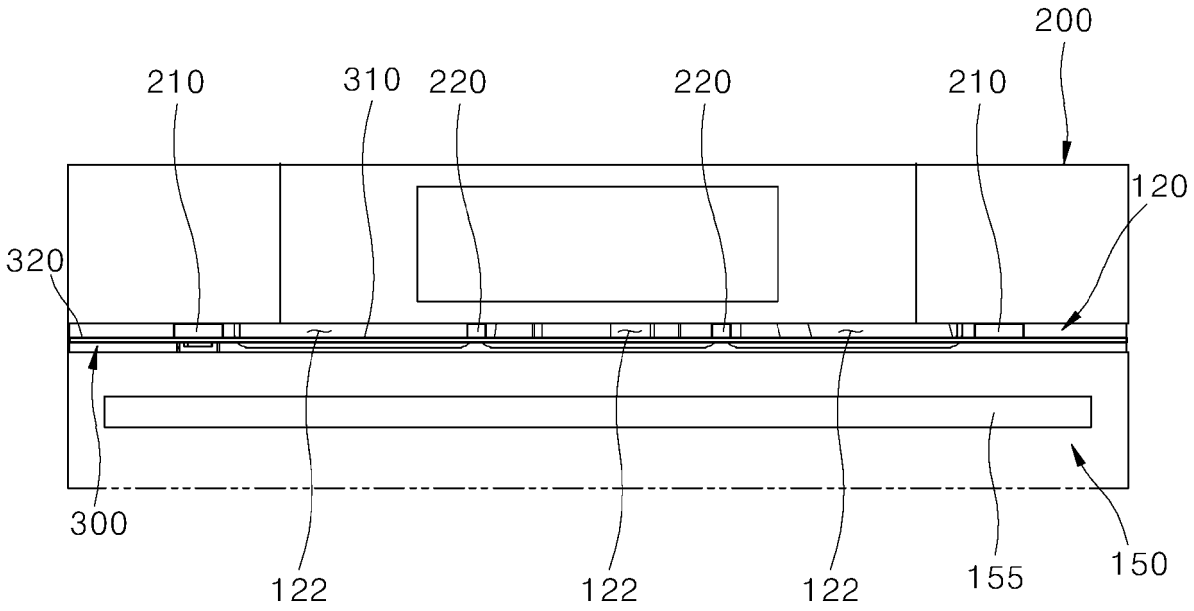
200
210
310
220
220
210
120
320
300
122
122
122
155
150

FIG. 18

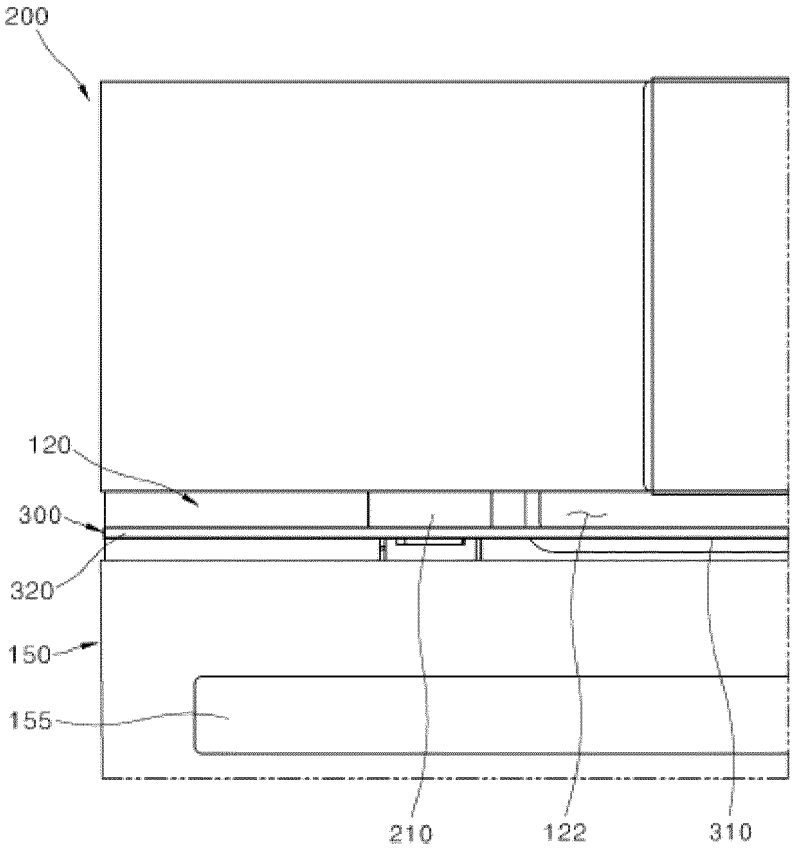
200
120
300
320
150
155
210
122
310

FIG. 19

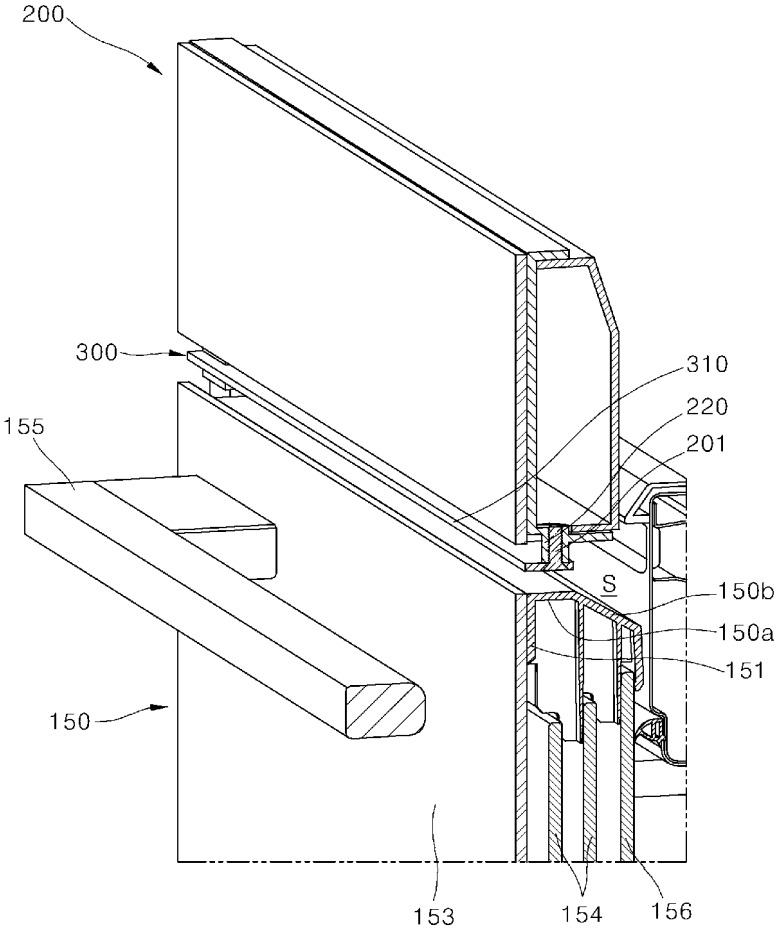
200
300
155
310
220
201
S
150b
150a
151
150
153
154
156

FIG. 20

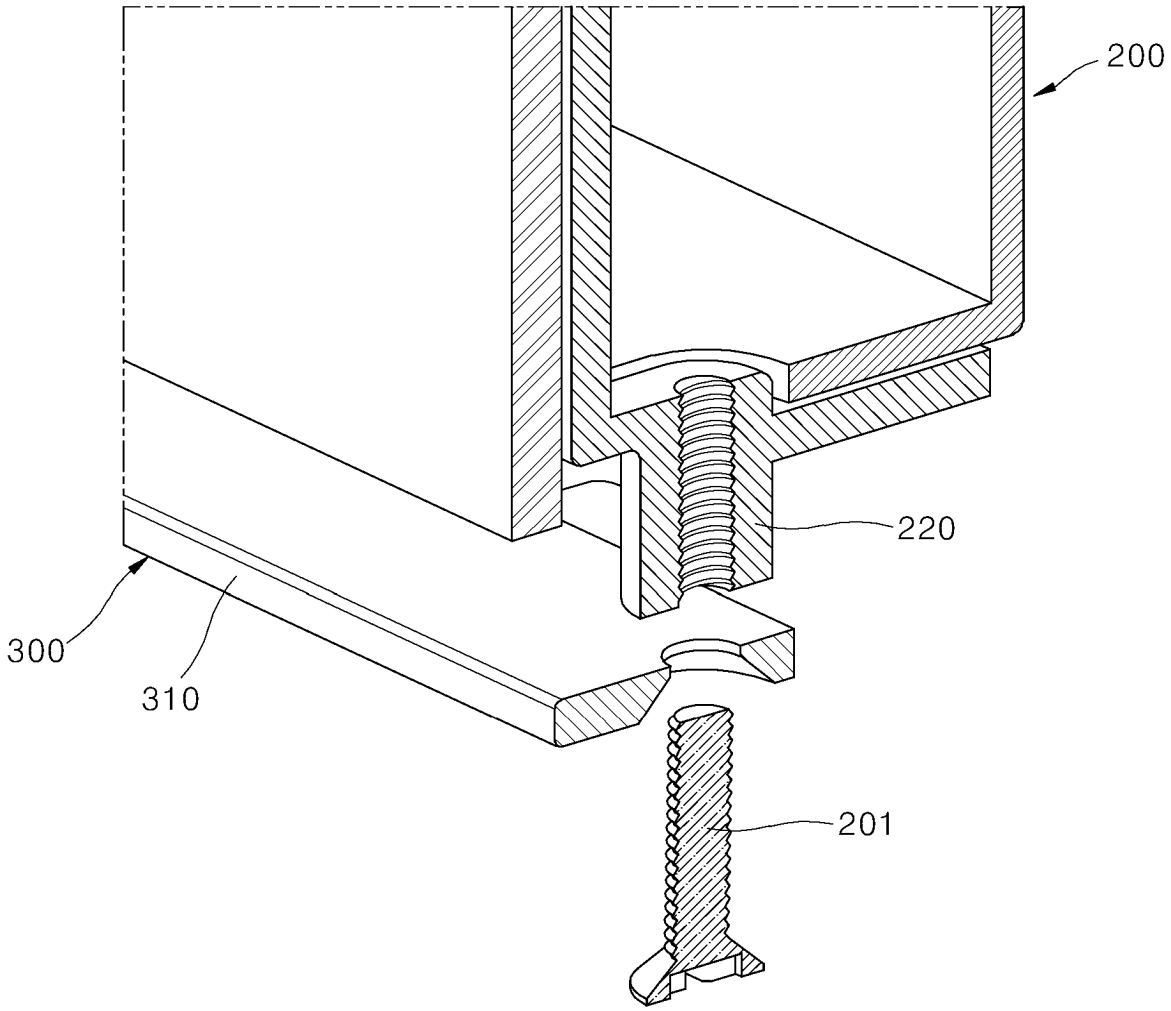

FIG. 21

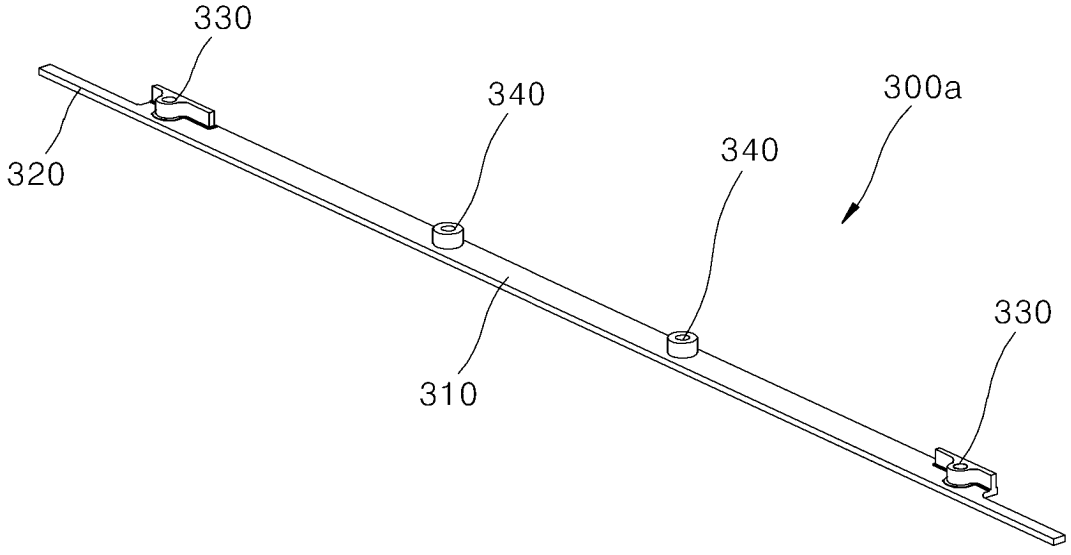

FIG. 22

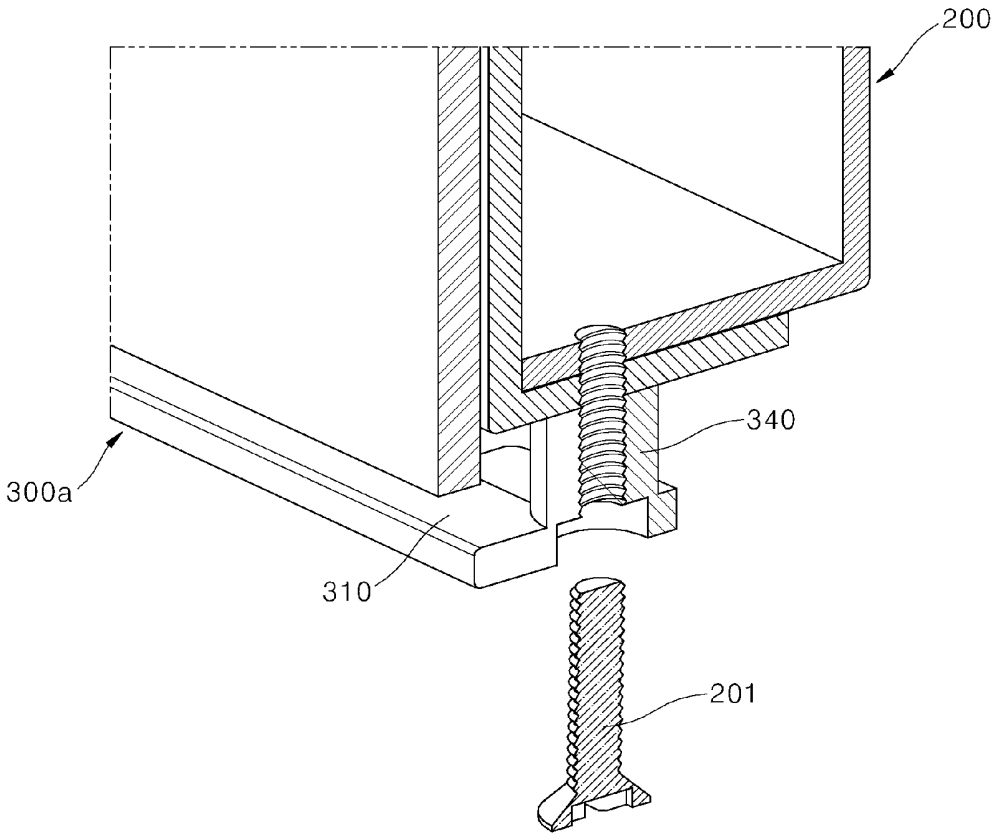
200
340
300a
310
201

FIG. 23

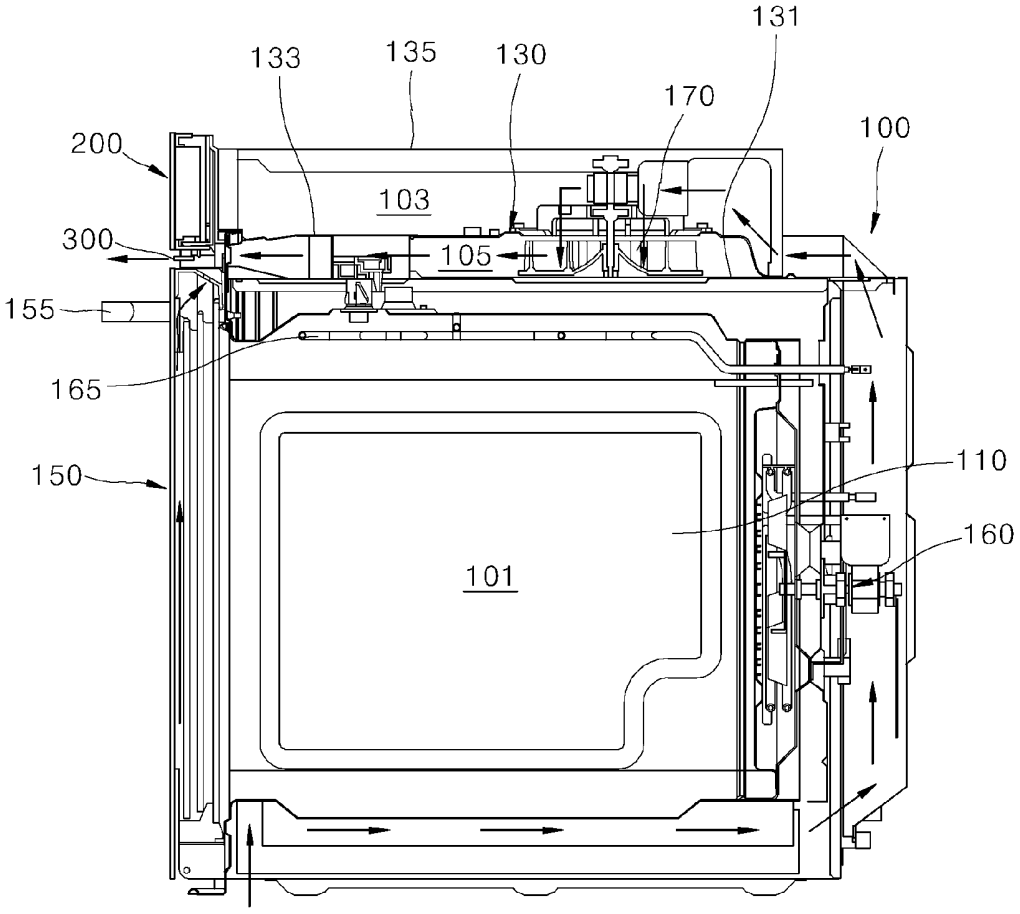
131
133
135
130
170
100
200
103
300
105
155
165
150
110
160
101

FIG. 24

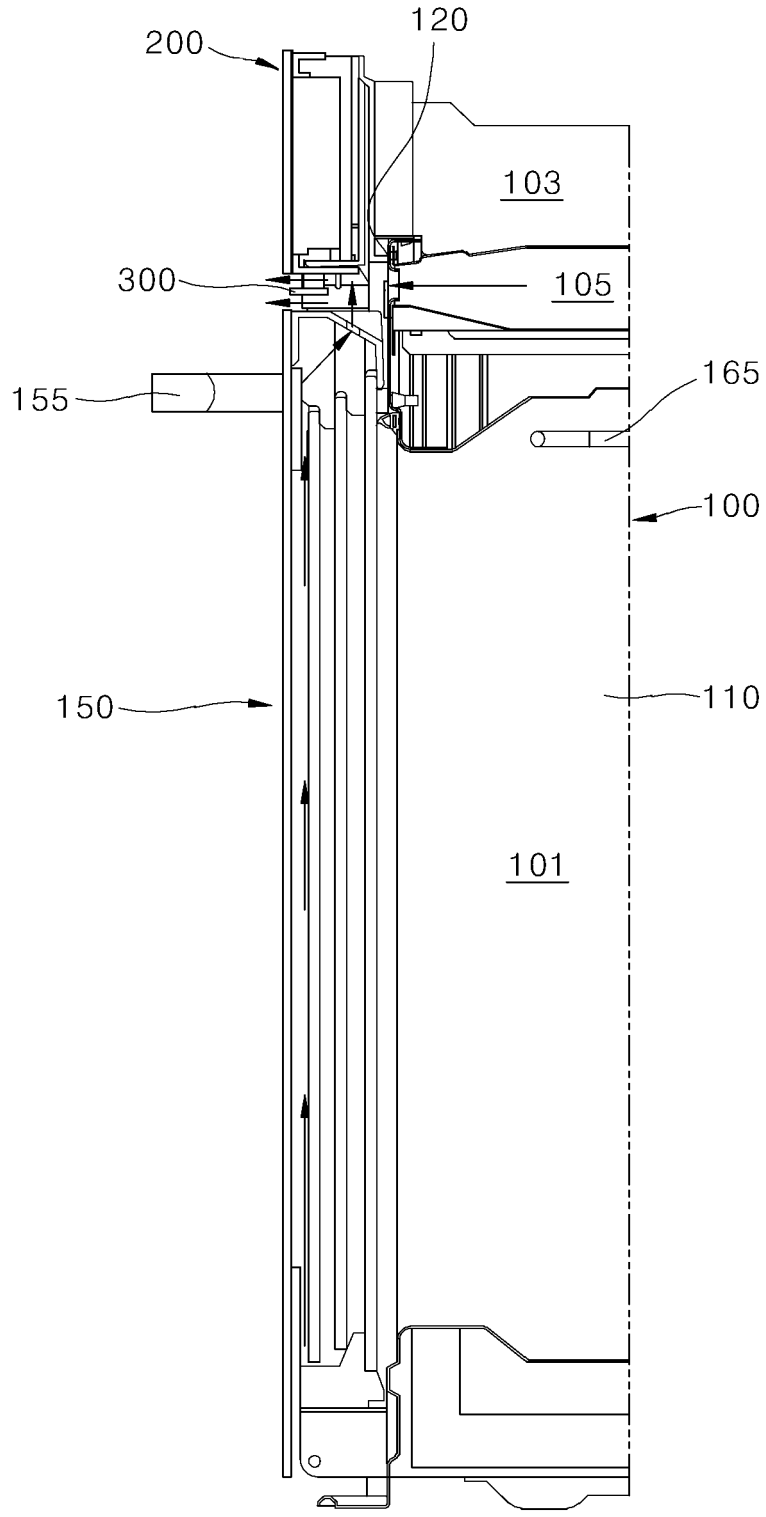

FIG. 25

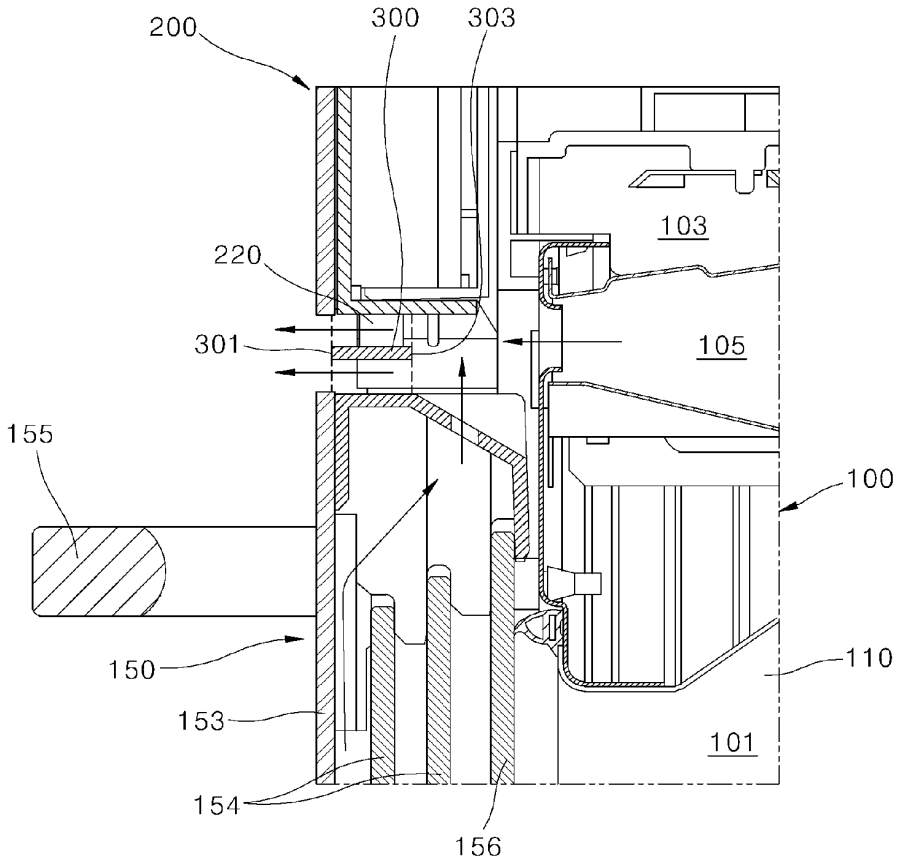
200
300
303
103
220
301
105
155
100
150
110
153
101
154
156

FIG. 26

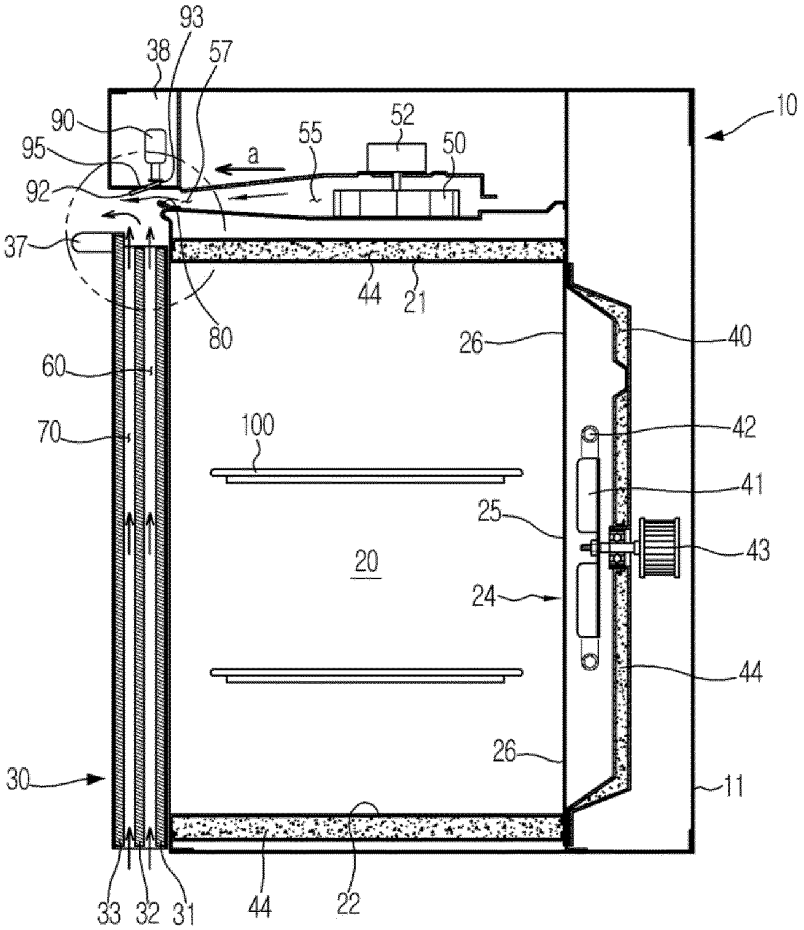
93
38
57
10
90
52
55
50
95
a
92
37
44
21
80
26
40
60
70
100
42
41
25
43
20
24
44
26
30
11
33
32
31
44
22

FIG. 27

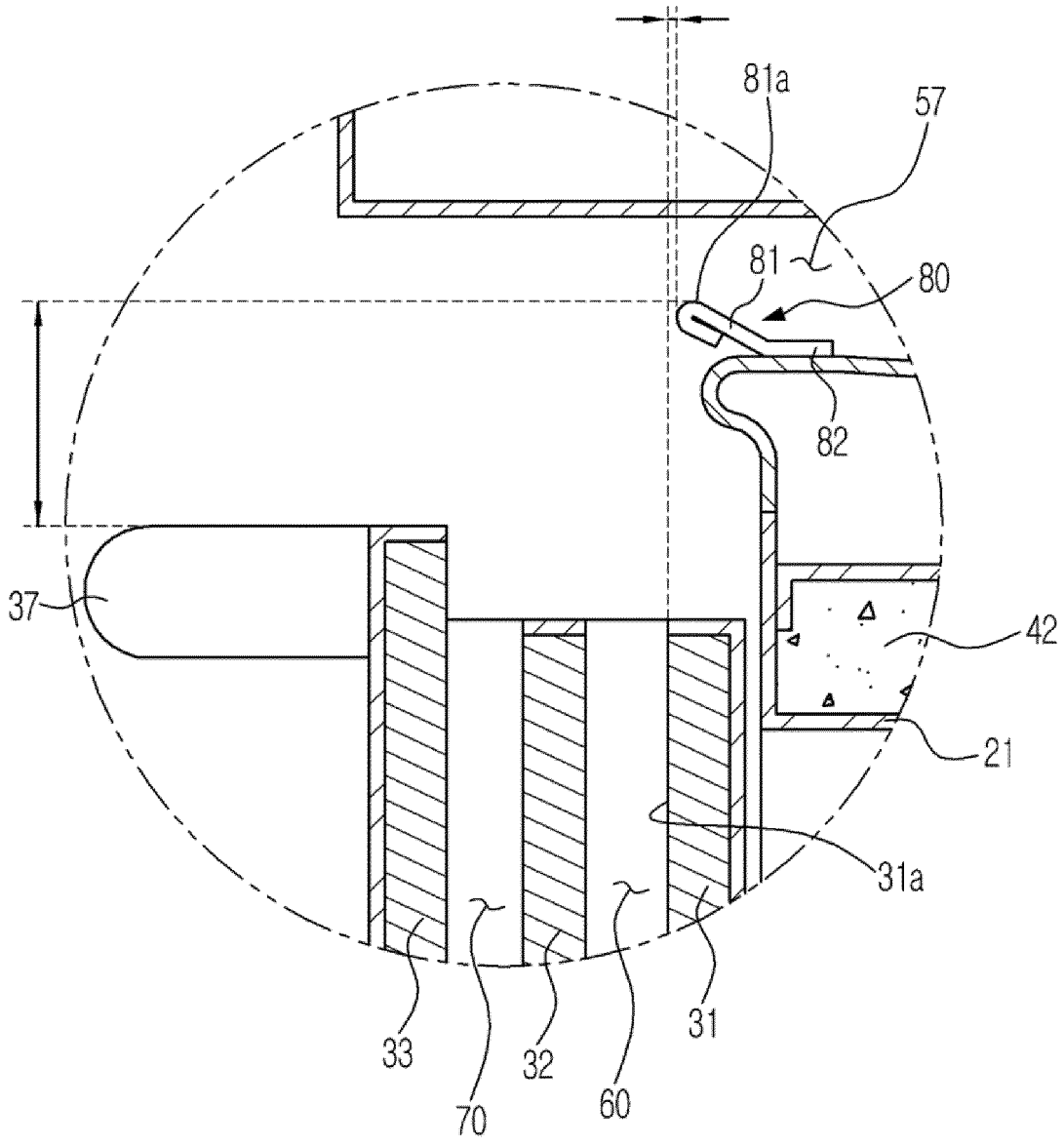

INTERNATIONAL SEARCH REPORT

International application No.
PCT/KR2022/017591

A. CLASSIFICATION OF SUBJECT MATTER

F24C 7/08(2006.01)i; **F24C 15/00**(2006.01)i; **F24C 15/02**(2006.01)i; **F24C 15/04**(2006.01)i

According to International Patent Classification (IPC) or to both national classification and IPC

B. FIELDS SEARCHED

Minimum documentation searched (classification system followed by classification symbols)

F24C 7/08(2006.01); F24C 15/00(2006.01); F24C 15/02(2006.01); F24C 15/04(2006.01); F24C 15/20(2006.01); F24C 3/12(2006.01)

Documentation searched other than minimum documentation to the extent that such documents are included in the fields searched

Korean utility models and applications for utility models: IPC as above
Japanese utility models and applications for utility models: IPC as above

Electronic data base consulted during the international search (name of data base and, where practicable, search terms used)

eKOMPASS (KIPO internal) & keywords: 캐비티 (cavity), 패널 (panel), 도어 (door), 에어가이드 (air guide), 조리기기 (cooking appliance)

C. DOCUMENTS CONSIDERED TO BE RELEVANT

Category*	Citation of document, with indication, where appropriate, of the relevant passages	Relevant to claim No.
X	KR 10-2019-0124584 A (SAMSUNG ELECTRONICS CO., LTD.) 05 November 2019 (2019-11-05) See paragraphs [0050]-[0164] and figures 4-8.	1-10
A	KR 10-2009-0123429 A (LG ELECTRONICS INC.) 02 December 2009 (2009-12-02) See paragraphs [0013]-[0047].	1-10
A	KR 10-2021-0106290 A (LG ELECTRONICS INC.) 30 August 2021 (2021-08-30) See claims 1-13.	1-10
A	US 2020-0408418 A1 (BSH HOME APPLIANCES CORPORATION et al.) 31 December 2020 (2020-12-31) See paragraphs [0033]-[0048].	1-10
A	KR 10-0649602 B1 (LG ELECTRONICS INC.) 27 November 2006 (2006-11-27) See claims 1-8.	1-10

☐ Further documents are listed in the continuation of Box C. ☑ See patent family annex.

* Special categories of cited documents:
"A" document defining the general state of the art which is not considered to be of particular relevance
"D" document cited by the applicant in the international application
"E" earlier application or patent but published on or after the international filing date
"L" document which may throw doubts on priority claim(s) or which is cited to establish the publication date of another citation or other special reason (as specified)
"O" document referring to an oral disclosure, use, exhibition or other means
"P" document published prior to the international filing date but later than the priority date claimed
"T" later document published after the international filing date or priority date and not in conflict with the application but cited to understand the principle or theory underlying the invention
"X" document of particular relevance; the claimed invention cannot be considered novel or cannot be considered to involve an inventive step when the document is taken alone
"Y" document of particular relevance; the claimed invention cannot be considered to involve an inventive step when the document is combined with one or more other such documents, such combination being obvious to a person skilled in the art
"&" document member of the same patent family

Date of the actual completion of the international search	Date of mailing of the international search report
17 February 2023	**20 February 2023**
Name and mailing address of the ISA/KR **Korean Intellectual Property Office** **Government Complex-Daejeon Building 4, 189 Cheongsa-ro, Seo-gu, Daejeon 35208** Facsimile No. **+82-42-481-8578**	Authorized officer Telephone No.

Form PCT/ISA/210 (second sheet) (July 2022)

INTERNATIONAL SEARCH REPORT
Information on patent family members

International application No.
PCT/KR2022/017591

Patent document cited in search report	Publication date (day/month/year)	Patent family member(s)	Publication date (day/month/year)
KR 10-2019-0124584 A	05 November 2019	KR 10-2471491 B1	28 November 2022
		US 11506396 B2	22 November 2022
		US 2021-0215345 A1	15 July 2021
		WO 2019-208953 A1	31 October 2019
KR 10-2009-0123429 A	02 December 2009	None	
KR 10-2021-0106290 A	30 August 2021	EP 3869105 A1	25 August 2021
		US 2021-0262671 A1	26 August 2021
US 2020-0408418 A1	31 December 2020	CA 3060505 A1	26 December 2020
		US 11073288 B2	27 July 2021
KR 10-0649602 B1	27 November 2006	KR 10-0649602 B1	27 November 2006

Form PCT/ISA/210 (patent family annex) (July 2022)

REFERENCES CITED IN THE DESCRIPTION

This list of references cited by the applicant is for the reader's convenience only. It does not form part of the European patent document. Even though great care has been taken in compiling the references, errors or omissions cannot be excluded and the EPO disclaims all liability in this regard.

Patent documents cited in the description

- KR 1020150030016 **[0025]**