Office de la Propriété Intellectuelle du Canada
Un organisme d'Industrie Canada

Canadian Intellectual Property Office
An agency of Industry Canada

CA 2876331 A1 2014/01/03

(21) 2 876 331

(12) DEMANDE DE BREVET CANADIEN
CANADIAN PATENT APPLICATION

(13) A1

(86) **Date de dépôt PCT/PCT Filing Date:** 2013/06/26
(87) **Date publication PCT/PCT Publication Date:** 2014/01/03
(85) **Entrée phase nationale/National Entry:** 2014/12/10
(86) **N° demande PCT/PCT Application No.:** US 2013/047756
(87) **N° publication PCT/PCT Publication No.:** 2014/004601
(30) **Priorité/Priority:** 2012/06/27 (US13/534,981)

(51) **Cl.Int./Int.Cl.** ***F16K 1/12*** (2006.01)

(71) **Demandeur/Applicant:**
FISHER CONTROLS INTERNATIONAL LLC, US

(72) **Inventeurs/Inventors:**
SCHADE, ROSS A., US;
JACKMAN, PHILLIP, US;
BOUWMAN, CHRISTOPHER E., US;
GUIEB-NEWTON, SEAN M., US;
JOHNSON, SHANE M., US;
COREY, BRIAN D., US;
MILLER, JUSTIN W., US

(74) **Agent:** ROBIC

(54) **Titre : VANNES AXIALES A FLUIDE AVEC ACTIONNEURS LINEAIRES**
(54) **Title: AXIAL FLUID VALVES HAVING LINEAR ACTUATORS**

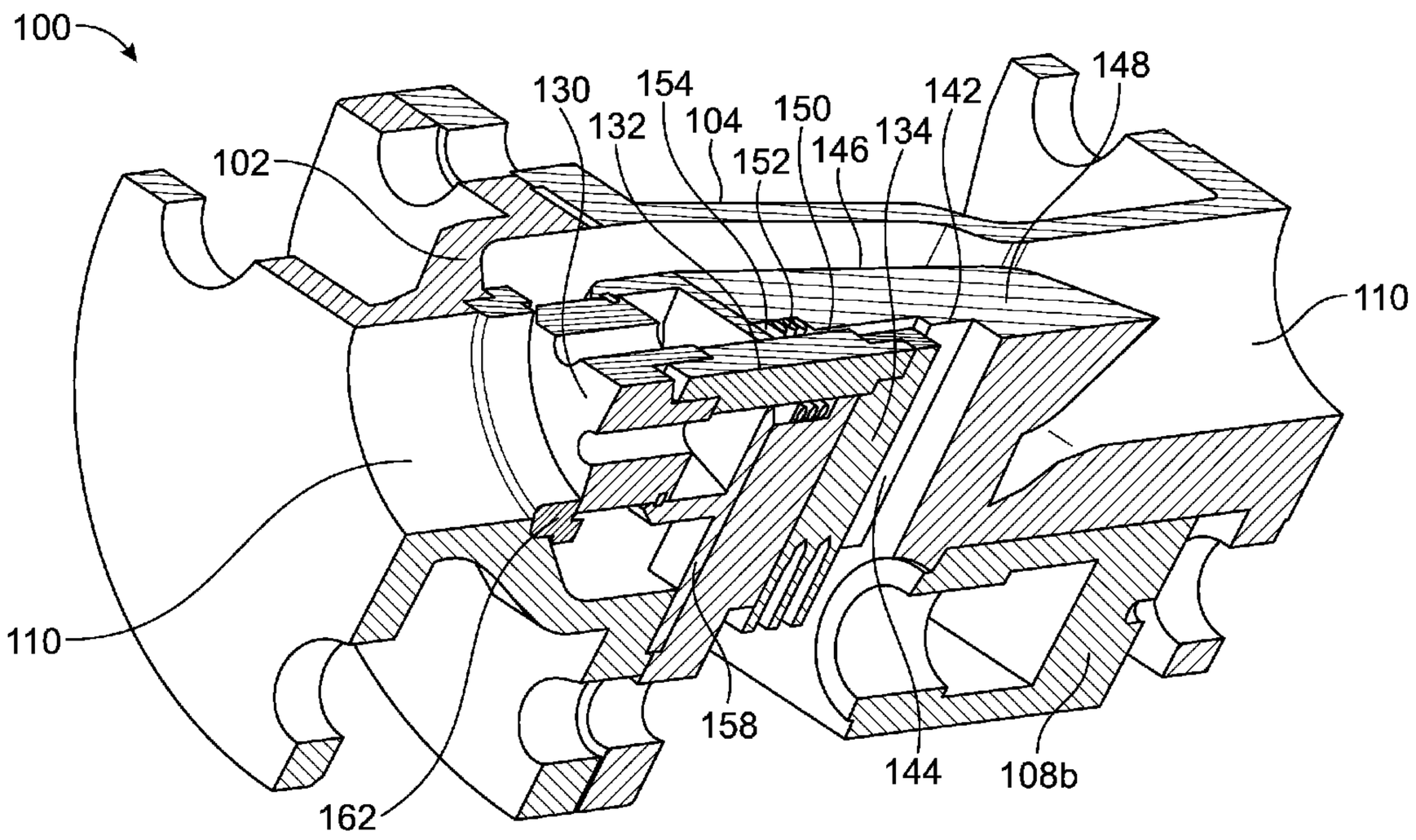

FIG. 2

(57) **Abrégé/Abstract:**
Axial fluid control valves having linear actuators are described herein. An example axial fluid control valve described herein includes a valve body defining a passageway (110) between an inlet (112) and an outlet (114). The example axial fluid valve includes a plug linkage assembly (106) movable relative to the axial valve body and along a first axis (140) substantially aligned with the passageway. The example axial fluid valve includes a linear actuator (108a) having a stem (182a) operatively coupled to the plug linkage assembly. The linear actuator is to move at least a portion of the plug linkage assembly along the first axis within the passageway to vary a flow of fluid through the passageway, wherein the stem of the linear actuator moves along a second axis (188a) different than the first axis.

(12) INTERNATIONAL APPLICATION PUBLISHED UNDER THE PATENT COOPERATION TREATY (PCT)

(19) World Intellectual Property Organization
International Bureau

(43) International Publication Date
3 January 2014 (03.01.2014)

WIPO | PCT

(10) International Publication Number
WO 2014/004601 A1

(51) **International Patent Classification**:
F16K 1/12 (2006.01)

(21) **International Application Number**:
PCT/US2013/047756

(22) **International Filing Date**:
26 June 2013 (26.06.2013)

(25) **Filing Language**: English

(26) **Publication Language**: English

(30) **Priority Data**:
13/534,981 27 June 2012 (27.06.2012) US

(71) **Applicant**: **FISHER CONTROLS INTERNATIONAL LLC** [US/US]; 205 S. Center Street, Marshalltown, IA 50158 (US).

(72) **Inventors**: **SCHADE, Ross A.**; 25498 Sand Hill Rail, Ames, IA 50010 (US). **JACKMAN, Phillip**; 4205 Phoenix St., Ames, IA 50014 (US). **BOUWMAN, Christopher E.**; 6854 Oakwood Dr., Urbandale, IA 50322 (US). **GUIEB-NEWTON, Sean M.**; 208 McConnell Dr., West Lake Hills, TX 78746 (US). **JOHNSON, Shane M.**; 2101 Oakwood Rd. #224, Ames, IA 50014 (US). **COREY, Brian D.**; 1115 Douglas St., Sioux City, IA 51105 (US). **MILLER, Justin W.**; 611 East South St. Apt. A-2, US, Marshalltown, IA 50158 (US).

(74) **Agent**: **READ, David C.**; MARSHALL, GERSTEIN & BORUN LLP, 233 S. Wacker Drive, 6300 Willis Tower, Chicago, IL 60606-6357 (US).

(81) **Designated States** *(unless otherwise indicated, for every kind of national protection available)*: AE, AG, AL, AM, AO, AT, AU, AZ, BA, BB, BG, BH, BN, BR, BW, BY, BZ, CA, CH, CL, CN, CO, CR, CU, CZ, DE, DK, DM, DO, DZ, EC, EE, EG, ES, FI, GB, GD, GE, GH, GM, GT, HN, HR, HU, ID, IL, IN, IS, JP, KE, KG, KN, KP, KR, KZ, LA, LC, LK, LR, LS, LT, LU, LY, MA, MD, ME, MG, MK, MN, MW, MX, MY, MZ, NA, NG, NI, NO, NZ, OM, PA, PE, PG, PH, PL, PT, QA, RO, RS, RU, RW, SC, SD, SE, SG, SK, SL, SM, ST, SV, SY, TH, TJ, TM, TN, TR, TT, TZ, UA, UG, US, UZ, VC, VN, ZA, ZM, ZW.

(84) **Designated States** *(unless otherwise indicated, for every kind of regional protection available)*: ARIPO (BW, GH, GM, KE, LR, LS, MW, MZ, NA, RW, SD, SL, SZ, TZ, UG, ZM, ZW), Eurasian (AM, AZ, BY, KG, KZ, RU, TJ, TM), European (AL, AT, BE, BG, CH, CY, CZ, DE, DK, EE, ES, FI, FR, GB, GR, HR, HU, IE, IS, IT, LT, LU, LV, MC, MK, MT, NL, NO, PL, PT, RO, RS, SE, SI, SK, SM, TR), OAPI (BF, BJ, CF, CG, CI, CM, GA, GN, GQ, GW, KM, ML, MR, NE, SN, TD, TG).

Published:

— *with international search report (Art. 21(3))*

(54) **Title**: AXIAL FLUID VALVES HAVING LINEAR ACTUATORS

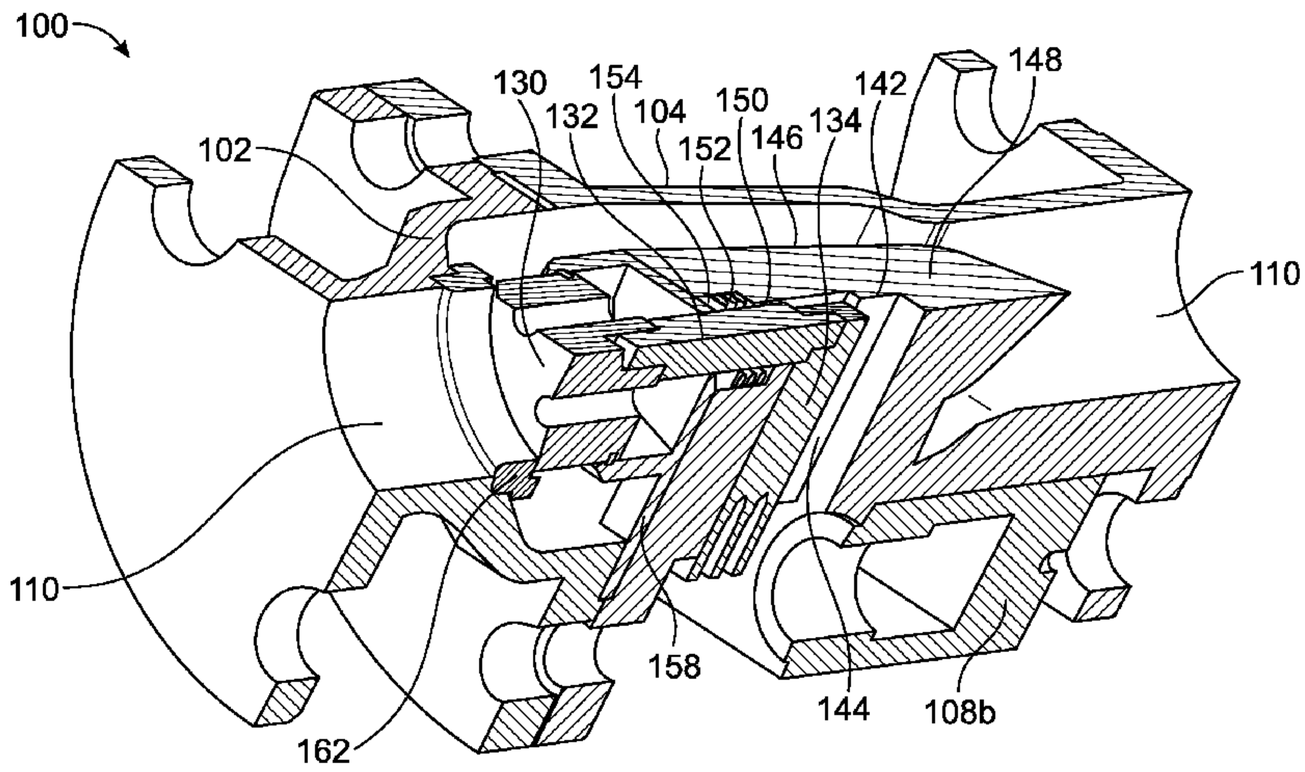

FIG. 2

(57) **Abstract**: Axial fluid control valves having linear actuators are described herein. An example axial fluid control valve described herein includes a valve body defining a passageway (110) between an inlet (112) and an outlet (114). The example axial fluid valve includes a plug linkage assembly (106) movable relative to the axial valve body and along a first axis (140) substantially aligned with the passageway. The example axial fluid valve includes a linear actuator (108a) having a stem (182a) operatively coupled to the plug linkage assembly. The linear actuator is to move at least a portion of the plug linkage assembly along the first axis within the passageway to vary a flow of fluid through the passageway, wherein the stem of the linear actuator moves along a second axis (188a) different than the first axis.

WO 2014/004601 A1

AXIAL FLUID VALVES HAVING LINEAR ACTUATORS

FIELD OF THE DISCLOSURE

[0001] The present disclosure relates generally to axial fluid valves and, more specifically, to axial fluid valves having linear actuators.

BACKGROUND

[0002] Fluid control valves (e.g., sliding stem valves, globe valves, rotary valves, butterfly valves, ball valves, etc.) are used in process control systems to control the flow of process fluids and typically include an actuator (e.g., rotary actuator, linear actuator, etc.) to automate operation of the valve. Some of these fluid control valves, although effective in many applications, involve tradeoffs. For example, butterfly valves may be used to control large flow volumes in an efficient manner, but are only capable of modest accuracy, and the seals therein are often limited in life cycle and temperature range. Globe valves, on the other hand, typically provide extremely rigid trim and precise control, but often provide lower flow capacity for a given line size.

[0003] In-line or axial fluid control valves are an alternative to the above-mentioned fluid control valves. One benefit of axial valves is that they incorporate globe valve style trim and, thus, the advantages offered thereby. Specifically, in axial valves, this trim may be oriented relative to the fluid flow path to increase efficiency and reduce energy losses due to noise and turbulence. Some known axial valves include an actuator mounted to an exterior surface of the valve body and positioned so the output shaft (e.g., stem, spindle, etc.) of the actuator is oriented substantially perpendicular to the fluid flow path of the valve. The output shaft of the actuator is commonly connected to a flow control member (e.g., a plug) within the valve body via a rack-on-rack, rack-and-pinion or similar gear assembly. The actuator moves the flow control member within the valve body relative to a seat ring between an open position and a closed position to allow or prevent the flow of fluid through the valve.

[0004] In these known axial fluid valves, because the motion of the actuator stem is substantially perpendicular to the flow path of the fluid through the valve, the externally mounted actuator configuration may require additional space which, in practice, is often very limited. Furthermore, many known axial fluid valves exhibit problems with actuation and sealing (e.g., gaskets, packing, seal rings). These known axial fluid valves often utilize actuators and transmissions within the fluid flow path and, as a result, require a large number of seals and gaskets to protect the gears and other actuation components from pressurized

process fluid. For example, some known axial valves use a complex gearbox to translate motion from an actuator to linear motion of a plug. Typically, the gearbox is in the fluid flow path and, thus, requires numerous seals to prevent process fluid from entering the gearbox. Operating axial fluid valves with such a large number of moving parts requiring numerous seals greatly increases the possibility of leakage of fluid outside the valve body and increases manufacturing and maintenance costs.

SUMMARY

[0005] An example apparatus includes an axial valve body defining a passageway between an inlet and an outlet. The example apparatus includes a plug linkage assembly movable relative to the axial valve body and along a first axis substantially aligned with the passageway. The example apparatus includes a linear actuator having a stem operatively coupled to the plug linkage assembly to move at least a portion of the plug linkage assembly along the first axis within the passageway to vary a flow of fluid through the passageway. The stem of the linear actuator moves along a second axis different than the first axis.

[0006] In another example, an apparatus described herein includes an axial valve body defining a passageway between an inlet and an outlet. A plug is slidably movable relative to the axial valve body and along a first axis substantially aligned with a fluid flow path of the passageway. A linkage bar is operatively coupled to the plug, and a longitudinal axis of the linkage bar is oriented along a second axis different than the first axis. The linkage bar is to move in a direction substantially aligned with the first axis to move the plug.

[0007] In yet another example, an apparatus includes a valve stem and a plug operatively connected to an end of the valve stem. The plug has an axis substantially aligned with the valve stem. A linkage bar is operatively connected to another end of the valve stem. A linear actuator is operatively connected to the linkage bar to move at least a portion of the linkage bar in a direction substantially parallel to the axis of the valve stem. The plug and valve stem are disposed inside an axial valve body and substantially aligned with a fluid flow path through the axial valve body.

BRIEF DESCRIPTION OF THE DRAWINGS

[0008] FIG. 1 illustrates a cross-sectional view of an example axial fluid control valve in accordance with the teachings of this disclosure.

[0009] FIG. 2 illustrates a perspective cross-sectional view of the example axial fluid control valve of FIG. 1.

[0010] FIG. 3 illustrates a cross-sectional view of an alternative example axial fluid control valve with a single linear actuator and rocker linkage bar.

DETAILED DESCRIPTION

[0011] Certain examples are shown in the above-identified figures and described in detail below. In describing these examples, like or identical reference numbers are used to identify the same or similar elements. The figures are not necessarily to scale and certain features and certain views of the figures may be shown exaggerated in scale or in schematic for clarity and/or conciseness. Additionally, several examples have been described throughout this specification. Any features from any example may be included with, a replacement for, or otherwise combined with other features from other examples.

[0012] The example axial fluid valves described herein reduce valve noise, provide an axially aligned passageway to reduce turbulent fluid flow and improve flow capacity, reduce the overall dimensions required to accommodate an axial valve within a piping system, significantly eliminate in-flow actuating components, which require numerous seals and gaskets, and increase flow efficiency to enable the use of smaller pumps and piping. In general, the example axial fluid valves described herein enable the use of globe valve style trim (e.g., a plug and seat ring) operatively coupled to one or more linear actuators (e.g., pneumatic actuators, hydraulic actuators, electric actuators) via a plug linkage assembly. A portion of the plug linkage assembly extends into or through a bore in the valve body in a manner that reduces or eliminates potential leakage paths commonly found in many known axial fluid valves.

[0013] One example axial fluid valve described herein includes a linear actuator offset and fluidly isolated from a fluid flow path of the valve and operatively coupled (e.g., connected) to a plug linkage assembly (e.g., a stem and a linkage bar). A portion of the plug linkage assembly (e.g., the linkage bar) is slidably moveable within a bore or opening that extends into or through a body of the valve and which fluidly isolates the plug linkage assembly from the fluid flow path. At least a portion of the plug linkage assembly is axially aligned with the fluid flow path, which greatly increases flow efficiency by reducing restrictions and, thus, turbulent flow through a passageway of the valve.

[0014] More specifically, in the example axial fluid valves described herein, an axial valve body includes a bore or opening that extends into or through the valve body. This bore or opening is fluidly isolated from a fluid passageway within the axial valve and is adapted to receive a linkage bar (e.g., a connecting rod, a rocker bar, etc.) that transfers linear motion of

an actuator stem to a stem of a plug within the axial valve. The linkage bar may be operatively connected to a stem of at least one linear actuator disposed outside the fluid passageway of valve body and is also connected to the plug stem through an aperture intersecting the bore or opening. The plug stem is sealed to the aperture via a packing.

[0015] The example valve body enables the linkage bar to pass through and remain isolated from the pressure boundary by directing the flow of fluid around the bore or opening and, thus, the linkage bar, within the fluid passageway of the valve body. In operation, the linkage bar transfers linear motion from the stem of a linear actuator that moves along an axis different than the axis along which the valve trim components move within the passageway of the valve body. For example, the axes along which the stem of the plug and the stem of the linear actuator move may be parallel but offset (i.e., non-coaxial).

[0016] The examples described herein enable a relatively large portion of the moving components of an axial fluid valve to be disposed outside the fluid flow path or stream, thereby significantly reducing the number of seals and gaskets required. Further, the example axial fluid valves described herein reduce leakage caused by seal failures because the actuator(s) may be disposed outside the fluid stream. The example axial fluid valves described herein also reduce the overall dimensions required to accommodate the plug linkage assembly within a piping system, thereby allowing the example axial fluid valves to be used with smaller pumps and piping.

[0017] In the example axial fluid valves described herein, because the valve body is configured to allow the linkage bar to pass into or through the valve body without being exposed to the pressure boundary within the fluid passageway of the valve body, a single packing and gasket may be used to separate the linkage bar and actuator(s) from the process fluid. The axial valve body and plug linkage assembly described herein significantly reduce the number of moving parts required to operate an axial fluid valve. Therefore, the plug assembly and external linear actuator(s) greatly simplify the manufacturing and machining requirements and, thus, decrease the cost of manufacturing an axial fluid valve. Furthermore, by having fewer moving parts, the example axial fluid valves described herein greatly reduce the possibility of mechanical failure and leakage during operations.

[0018] FIG. 1 illustrates a cross-sectional view of an example axial fluid control valve 100 described herein. The axial fluid control valve 100 includes a first valve body portion 102, a second valve body portion 104, a plug linkage assembly 106 and first and second linear actuators 108a and 108b. The valve body portions 102 and 104 are coupled to define a

passageway 110 that provides a fluid flow path between an inlet 112 and an outlet 114 when the axial fluid control valve 100 is installed in a fluid process system (e.g., a distribution piping system). In some examples, the first valve body portion 102 and the second valve body portion 104 may be integrally formed to define the axial fluid control valve 100 as a substantially unitary piece or structure.

[0019] The first valve body portion 102 includes a first flange 116 at the inlet 112 and a second flange 118 removably coupled to a third flange 120 of the second valve body portion 104. The second flange 118 of the first valve body portion 102 and the third flange 120 of the second valve body portion 104 are coupled via flange fasteners 122 (e.g., bolts). In other examples, the second flange 118 and the third flange 120 may be removably coupled with any other suitable fastening mechanism(s). The second valve body portion 104 also includes a fourth flange 124 at the outlet 114. In operation, the first flange 116 of the first valve body portion 102 may be coupled to an upstream pipe 126 and the fourth flange 124 of the second valve body portion 104 may be coupled to a downstream pipe 128.

[0020] In the example shown in FIG. 1, the axial fluid control valve 100 is in a first (closed) position. The axial fluid control valve 100 is interposed in a fluid flow path between an upstream supply source via the upstream pipe 126 and a downstream supply source via the downstream pipe 128. The process fluid may include any process fluid such as, for example, natural gas. In operation, the plug linkage assembly 106 operates between the first position to prevent the flow of fluid between the inlet 112 and the outlet 114 (e.g., the closed position) and a second position to allow fluid flow between the inlet 112 and the outlet 114 (e.g., an open position, not shown).

[0021] In the example axial fluid control valve 100 shown in FIG. 1, the plug linkage assembly 106 comprises a plug 130, a plug stem 132 and a linkage bar 134. As shown in the example, the plug stem 132 is coupled to the plug 130 at a first end 136 and coupled to the linkage bar 134 at a second end 138. In some examples, the plug stem 132 may be integrally formed with the plug 130 as a substantially unitary piece or structure. In the example shown, the plug 130 and a portion of the plug stem 132 are disposed within the passageway 110 such that their longitudinal axes are substantially axially aligned (i.e., coaxial) or substantially parallel to a longitudinal axis 140 of the passageway 110 and fluid flow therethrough.

[0022] In this example, the second valve body portion 104 comprises a bore 142 that extends through the second valve body portion 104 in a direction substantially perpendicular to the passageway 110. The bore 142 has an inner wall surface 144 and an outer wall surface 146.

The inner wall surface 144 of the bore 142 is fluidly isolated from the process fluid within the passageway 110. The process fluid flows through the passageway 110 and around the outer wall surface 146 of the bore 142. The bore 142 extends through the second valve body portion 104 and is sized to receive the linkage bar 134 and enable translation of the linkage bar 134 along the longitudinal axis 140 as described in more detail below.

[0023] As more clearly shown in FIG. 2, the bore 142 is fluidly isolated from the passageway 110 by the outer wall surface 146. Thus, the passageway 110 diverts to either side of the bore 142 within the axial fluid control valve 100 and the bore 142 is exposed to the atmosphere outside the axial fluid control valve 100. In the present example, the bore 142 is rectangular, but in other examples the bore 142 may be circular, elliptical, semi-elliptical, or any other shape capable of receiving the linkage bar 134.

[0024] The outer wall surface 146 of the bore 142 may be shaped to reduce friction and, thus, turbulence within the passageway 110 of the axial fluid control valve 100. As shown in FIGS. 1 and 2, the second valve body portion 104 also includes a conical protrusion or cone 148 extending away from the outer wall surface 146 of the bore 142. The cone 148 is shaped to reduce or minimize turbulence and, thus, increases flow efficiency and decreases energy loss due to turbulence and noise. In some examples, the cone 148 may be integrally formed with the second valve body portion 104 as a substantially unitary piece or structure.

[0025] In the example shown in FIGS. 1 and 2, the plug stem 132 extends through an aperture 150 in the bore 142. The aperture 150 includes a packing 152 to maintain a seal between the passageway 110 and the bore 142 and enables a smooth, linear movement of the plug stem 132. The packing 152 is held in place by a gland nut 154, which may compress the packing 152 to form a watertight seal and prevent leakage of process fluid from the passageway 110 to the bore 142.

[0026] In this example, the axial fluid control valve 100 further comprises gaskets (e.g., seals) 156 and 157 and a cage 158. The gaskets 156 and 157 are disposed on either side of the cage 158 between the second flange 118 of the first valve body portion 102 and the third flange 120 of the second valve body portion 104. The cage 158 extends outward and is axially aligned within the fluid flow path in the passageway 110. The plug 130 is slidable within the cage 158 and is sized to fit closely within the cage 158. In the example shown, a compression ring 160 is engaged between the plug 130 and the cage 158.

[0027] A seat ring 162 is operatively connected to an inside surface of the first valve body portion 102 adjacent the inlet 112. The seat ring 162 includes a flanged portion 164 to

receive a tapered surface 166 of the plug 130. In operation, the plug 130 is moved in a first direction toward the seat ring 162 to restrict or prevent the flow of fluid through the first and second valve body portions 102 and 104 and in a second direction away from the seat ring 162 to allow or increase the flow of fluid through the first and second valve body portions 102 and 104.

[0028] The plug 130 is a flow control member having holes 168a and 168b to balance pressure between the fluid stream within the passageway 110 and the area behind the plug 130 in a cage cavity 170. In other examples, the plug 130 may contain more or less than two holes to balance the pressure behind the plug 130 in the cage cavity 170. In still other examples, the plug 130 may be any other flow control member such as an unbalanced plug.

[0029] To move the plug linkage assembly 106 between the first position and the second position, the linkage bar 134 is operatively connected to the first linear actuator 108a and the second linear actuator 108b. The linkage bar 134 is oriented along a longitudinal axis 172 and is disposed within and extends through the bore 142. In the example shown, the linkage bar 134 is outside the pressure boundary of the passageway 110.

[0030] In this example, the first and second linear actuators 108a and 108b are pneumatic (operated by pressurized gas). Pneumatic actuators may be advantageous in applications involving a volatile process fluid such as, for example, natural gas. However, in other examples, the first and second linear actuators 108a and 108b may be any type of linear actuator such as, for example, a hydraulic actuator, an electric actuator, a mechanical actuator, an electro-mechanical actuator, a piezoelectroic actuator or any other suitable actuator or drive member.

[0031] In the example axial fluid control valve 100 shown, the linear actuators 108a and 108b include respective pressurized cylinders 180a and 180b and actuator stems 182a and 182b. The actuator stems 182a and 182b are coupled to the linkage bar 134 via adapters 184a and 184b at distal ends of the linkage bar 134. In the example shown, the adapters 184a and 184b are removably coupled to the linkage bar 134 by fasteners 186a-d (e.g., bolts). In other examples, the adapters 184a and 184b may be removably coupled to the linkage bar 134 with any other suitable fastening mechanism(s). In still other examples, the stems 182a and 182b may be removably coupled directly to the linkage bar 134 without the adapters 184a and 184b.

[0032] During operation, compressed gas fills the pressurized cylinders 180a and 180b to force the stems 182a and 182b toward the seat ring 162. The linear actuators 108a and 108b

are oriented along axes 188a and 188b that are substantially parallel to the passageway axis 140 but offset (i.e., non-coaxial) relative to the passageway axis 140. The stems 182a and 182b move the linkage bar 134 linearly along an axis substantially aligned with the passageway axis 140. In the present example, the linkage bar 134 operates as a connecting rod and moves the plug stem 132 and, thus, the plug 130 toward or away from the seat ring 162 to vary fluid flow through the passageway 110 between the inlet 112 and the outlet 114.

[0033] The example first valve body portion 102, second valve body portion 104 and/or the plug linkage assembly 106 may be made of any suitable material such as, for example, cast iron, carbon steel, corrosion resistant materials such as, for example, stainless steel, high nickel steel, etc., and/or any other suitable material(s), or a combination thereof.

[0034] FIG. 3 illustrates a cross-sectional view of an alternative example axial fluid control valve 300. The axial fluid control valve 300 includes a first valve body portion 302, a second valve body portion 304, a plug linkage assembly 306, and a linear actuator 308. The first valve body portion 302 and the second valve body portion 304 are coupled to define a passageway 310 that provides a fluid flow path between an inlet 312 and an outlet 314 when the axial fluid control valve 300 is installed in a fluid process system (e.g., a distribution piping system).

[0035] In the example shown, the axial fluid control valve 300 is in a second position (e.g., open). The axial fluid control valve 300 may be interposed in a fluid flow path between an upstream supply source via an upstream pipe 316 and a downstream supply source via the downstream pipe 318. In operation, the plug linkage assembly 306 operates between a first position to prevent a flow of fluid 319 between the inlet 312 and the outlet 314 (e.g., a closed position, not shown) and a second position to allow the flow of fluid 319 between the inlet 312 and the outlet 314 (e.g., an open position).

[0036] The example plug linkage assembly 306 comprises a plug 320, a stem 322, a linkage bar 324, a pin-in-slot joint 326, a joint 328 and a pivot or fulcrum 330. As shown in the example, the stem 322 is coupled to the plug 320 at a first end 332. The plug 320 and a portion of the stem 322 are disposed within the passageway 310 such that their longitudinal axes are substantially axially aligned (i.e., coaxial) or substantially parallel to a longitudinal axis 334 of the passageway 310 and fluid flow therethrough.

[0037] In this example, the second valve body portion 304 comprises a cavity 336, which extends into the second valve body portion 304. The cavity 336 receives the linkage bar 324,

the pin-in-slot joint 326 and the fulcrum 330. The fulcrum 330 is a pivotal joint coupled to an inner wall 338 of the cavity 336.

[0038] The cavity 336 is fluidly isolated from the passageway 310 by an outer wall 340 of the cavity 336. The passageway 310 diverts around either side of and underneath the cavity 336, and the inside of the cavity 336 is exposed to the atmosphere outside the axial fluid control valve 300.

[0039] The stem 322 traverses through an aperture 342 in the wall of the cavity 336. The aperture 342 includes packing 344 to maintain a seal between process fluid within the passageway 310 and the cavity 336. The packing 344 is held in place by a gland nut 346 to compress the packing 344 to form a watertight seal and prevent leakage of process fluid from the passageway 310 to the cavity 336.

[0040] In the example shown, the axial fluid control valve 300 further comprises gaskets (e.g., seals) 348 and 349 and a cage 354. The gaskets 348 and 349 are disposed on either side of the cage 354 between a second flange 350 of the first valve body portion 302 and a third flange 352 of the second valve body portion 304. The cage 354 extends axially within the fluid flow path in the passageway 310. A seat ring 356 is operatively connected to an inside surface of the first valve body portion 302 adjacent the inlet 312. The seat ring 356 includes a flanged portion 358 to receive the plug 320. In operation, the plug 320 is moved in a first direction toward the seat ring 356 to restrict or prevent the flow of fluid through the first and second valve body portions 302 and 304 and in a second direction away from the seat ring 356 to allow or increase the flow of fluid through the valve body portions 302 and 304.

[0041] A second end 360 of the stem 322 is pivotally and slidably attached to an end of the linkage bar 324 by the pin-in-slot joint 326 (e.g., a half joint). In the example shown, the linkage bar 324 contains a slot 362 within which the linkage bar 324 and the stem 322 are connected by a pin 364 (e.g., peg, knob, etc.). The linkage bar 324 is pivotally attached to the inner wall 338 of the cavity 336 by the fulcrum 330.

[0042] To move the plug linkage assembly 306 between the first position (closed) and the second position (open), the linkage bar 324 is pivotally connected to the linear actuator 308 by the joint 328. In the example shown, the actuator 308 includes a pressurized cylinder 366 and an actuator stem 368. The actuator stem 368 is pivotally coupled to an intermediate bar 370 by a hinge 372, and the intermediate bar 370 is pivotally coupled to the linkage bar 324 by the joint 328. In other examples, the actuator stem 368 and the linkage bar 324 may be slidably and pivotally attached by any other suitable mechanism(s).

[0043] In the example shown, during operation, compressed gas fills the pressurized cylinder 366 to force the actuator stem 368 in an outward direction (i.e., toward the seat ring 356). The linear actuator 308 is oriented along an axis 374, which is substantially parallel to the passageway axis 334 but offset (i.e., non-coaxial) relative to the passageway axis 334. The actuator stem 368, via the intermediate bar 370, moves the linkage bar 324, which pivots about the fulcrum 330 within the cavity 336. Consequently, the linkage bar 324 moves the stem 322 and the plug 320 away from the seat ring 356 to open the passageway 310 and allow the flow of fluid through the valve body from the inlet 312 to the outlet 314. In the present example, the linkage bar 324 acts as a lever or rocker, which transfers linear motion from the actuator 308 to linear motion in the plug 320.

[0044] The example axial fluid control valves 100 and 300 described herein advantageously reduce the overall dimensions required to accommodate an axial valve, significantly reduce the number of in-flow actuating components, which require extensive seals and gaskets, and increase flow efficiency. The example axial fluid control valves 100 and 300 also reduce unwanted leakage because the actuation components are disposed outside the pressure boundary of the fluid stream. Additionally, the example axial fluid control valves 100 and 300 include significantly fewer moving parts, which greatly reduce the costs of manufacturing and maintenance. The example valves described herein also include axially aligned passageways between the inlets and the outlets to provide a minimally restrictive flow path through the valves.

[0045] Although certain example apparatus have been described herein, the scope of coverage of this patent is not limited thereto. On the contrary, this patent covers all methods, apparatus, and articles of manufacture fairly falling within the scope of the appended claims either literally or under the doctrine of equivalents.

What is claimed is:

1. An apparatus comprising:

an axial valve body defining a passageway between an inlet and an outlet;

a plug linkage assembly movable relative to the axial valve body and along a first axis substantially aligned with the passageway; and

a linear actuator having a stem operatively coupled to the plug linkage assembly to move at least a portion of the plug linkage assembly along the first axis within the passageway to vary a flow of fluid through the passageway, wherein the stem of the linear actuator moves along a second axis different than the first axis.

2. The apparatus as defined in claim 1, wherein the axial valve body comprises a bore extending into the axial valve body, the bore fluidly isolated from the passageway, wherein at least a portion of the plug linkage assembly is disposed and is to move within the bore in the axial valve body.

3. The apparatus as defined in any of the preceding claims, wherein the plug linkage assembly comprises a linkage bar having a longitudinal axis oriented along a third axis different than the first axis, and wherein the linkage bar is to move in a direction substantially aligned with the first axis to move a plug.

4. The apparatus as defined in any of the preceding claims, wherein the plug linkage assembly comprises a linkage bar pivotally attached to a fulcrum fixed to the axial valve body.

5. The apparatus as defined in any of the preceding claims, wherein the linear actuator is fixed to an outer surface of the axial valve body.

6. The apparatus as defined in any of the preceding claims, wherein the axial valve body comprises an integrally molded housing to receive the linear actuator.

7. The apparatus as defined in any of the preceding claims, wherein the first axis and the second axis are substantially parallel.

8. The apparatus as defined in any of the preceding claims, wherein the axial valve body comprises a unitary structure between the inlet and the outlet.

9. The apparatus as defined in any of the preceding claims, further comprising a second linear actuator operatively coupled to the plug linkage assembly.

10. The apparatus as defined in any of the preceding claims, wherein the axial valve body comprises a seat and the linear actuator is to move the plug linkage assembly

toward the seat to prevent the flow of fluid between the inlet and the outlet and away from the seat to allow the flow of fluid between the inlet and the outlet.

11. The apparatus as defined in any of the preceding claims, further comprising a cage coupled to the axial valve body and substantially aligned along the first axis to receive at least a portion of the plug linkage assembly.

12. An apparatus comprising:

an axial valve body defining a passageway between an inlet and an outlet;

a plug slidably movable relative to the axial valve body and along a first axis substantially aligned with a fluid flow path of the passageway; and

a linkage bar operatively coupled to the plug, wherein a longitudinal axis of the linkage bar is oriented along a second axis different than the first axis, wherein the linkage bar is to move in a direction substantially aligned with the first axis to move the plug.

13. The apparatus as defined in claim 12, wherein the axial valve body comprises an opening extending into the axial valve body, the opening to receive the linkage bar.

14. The apparatus as defined in any of the preceding claims, wherein the second axis is substantially perpendicular to the first axis.

15. The apparatus as defined in any of the preceding claims, further comprising a linear actuator operatively coupled to the linkage bar.

16. The apparatus as defined in any of the preceding claims, wherein the passageway, the inlet, and the outlet are substantially aligned along the first axis.

17. The apparatus as defined in any of the preceding claims, wherein the linkage bar and the plug are operatively coupled via a stem and the stem is substantially aligned along the first axis within the passageway.

18. An apparatus comprising:

a valve stem;

a plug coupled to an end of the valve stem, wherein the plug has an axis substantially aligned with the valve stem;

a linkage bar coupled to another end of the valve stem; and

a linear actuator operatively connected to the linkage bar to move at least a portion of the linkage bar in a direction substantially parallel to the axis of the valve stem, wherein the plug and valve stem are disposed inside an axial valve body and substantially aligned with a fluid flow path through the axial valve body.

19. The apparatus as defined in claim 18, further comprising a second linear actuator operatively connected to the linkage bar, wherein the linear actuators move the plug via the valve stem and linkage bar to vary a flow of fluid through the axial valve body.

20. The apparatus as defined in any of the preceding claims, wherein the linear actuators are operatively coupled to distal ends of the linkage bar.

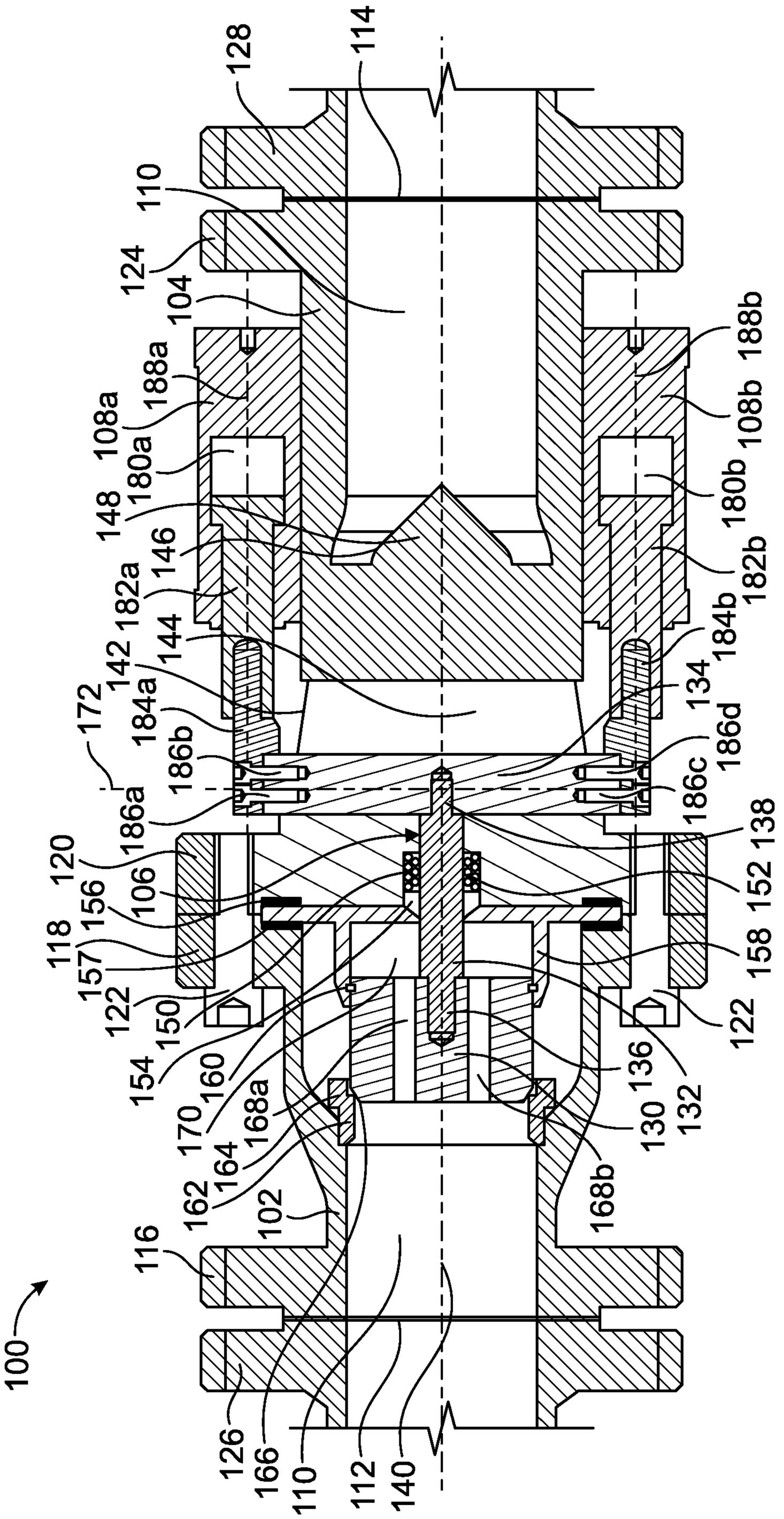
100
116
102
162
164
168a
170
154
160
150
122
157
118
156
106
120
126
166
110
112
140
168b
130
132
136
122
158
152
138
186c
186d
134
184b
182b
188b
108b
180b
146
144
142
172
184a
186b
186a
104
124
110
114
128
148
180a
108a
188a
182a

FIG. 1

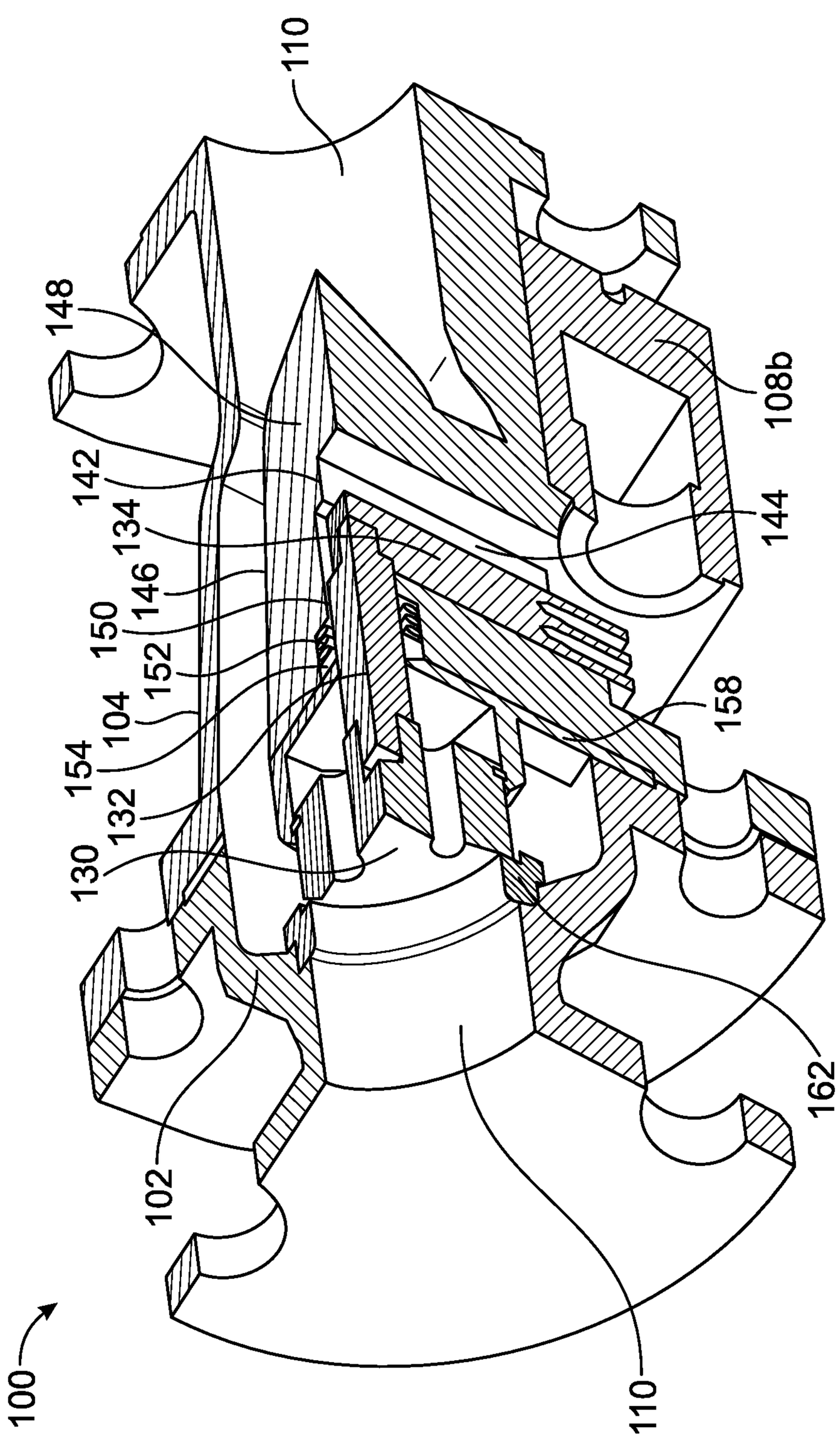
100
102
104
110
130
132
134
142
144
146
148
150
152
154
158
162
108b

FIG. 2

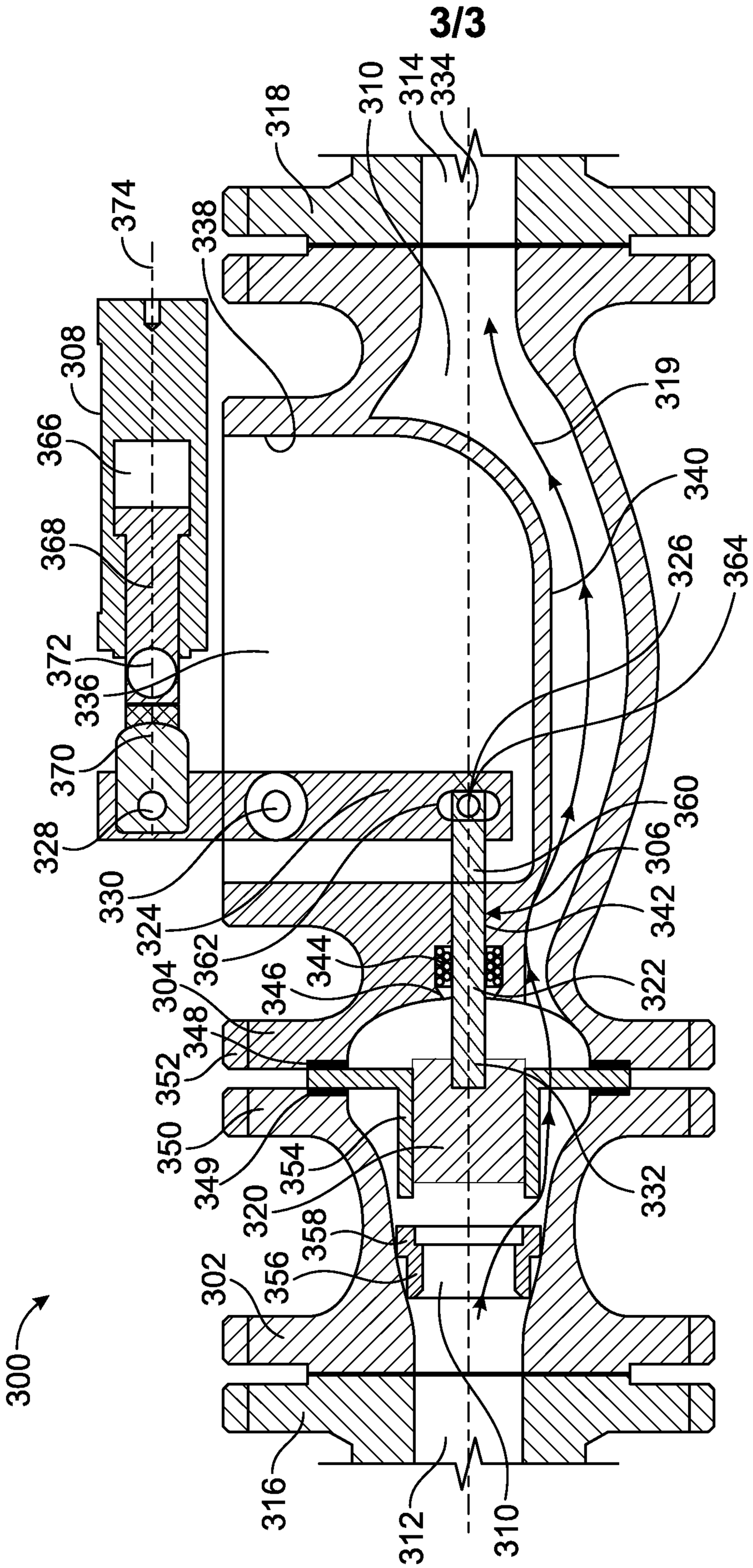
300
302
304
306
308
310
312
314
316
318
319
320
322
324
326
328
330
332
334
336
338
340
342
344
346
348
349
350
352
354
356
358
360
362
364
366
368
370
372
374

FIG. 3

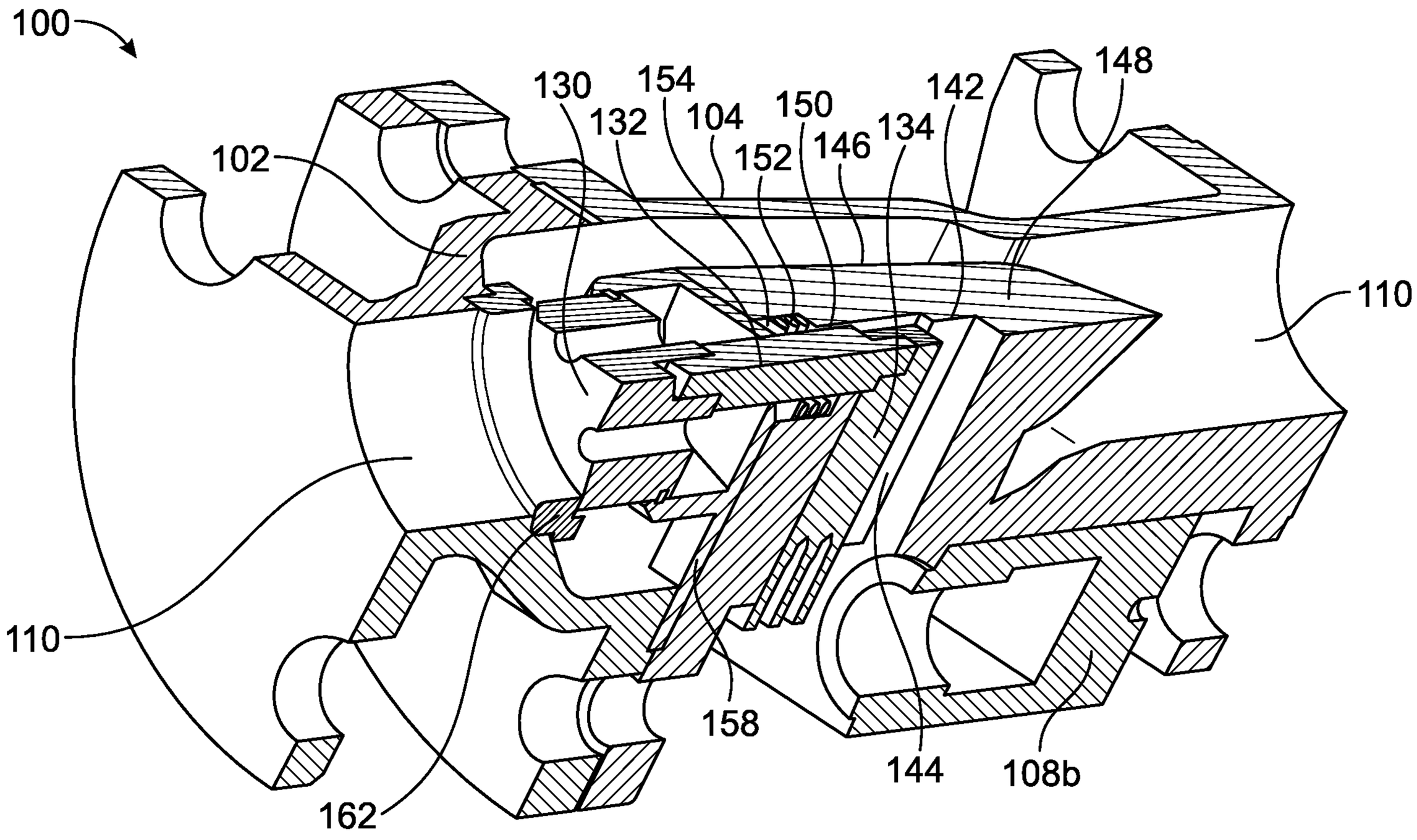
100
102
130
132
154
104
150
152
146
134
142
148
110
110
158
144
108b
162

FIG. 2