April 30, 1935. H. S. CHILES ET AL 1,999,956

THERAPEUTIC APPLIANCE

Filed July 26, 1932 2 Sheets-Sheet 1

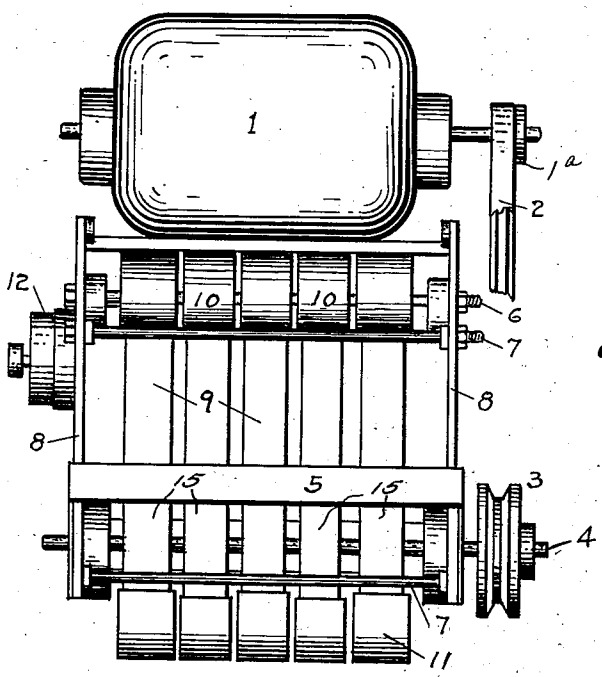

Fig. 1.

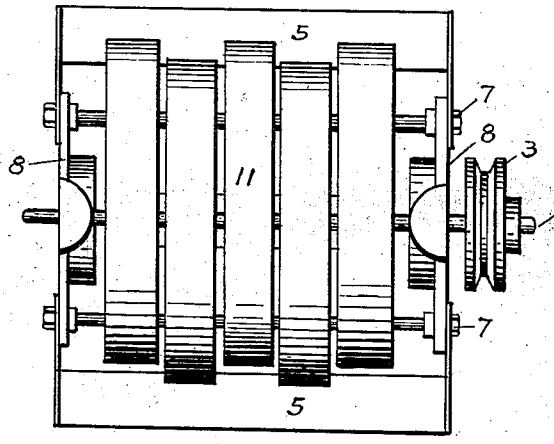

Fig. 2.

Inventors:
H. S. Chiles
F. L. Gerger
per Watson & Coleman
Attorney

April 30, 1935. H. S. CHILES ET AL 1,999,956

THERAPEUTIC APPLIANCE

Filed July 26, 1932 2 Sheets-Sheet 2

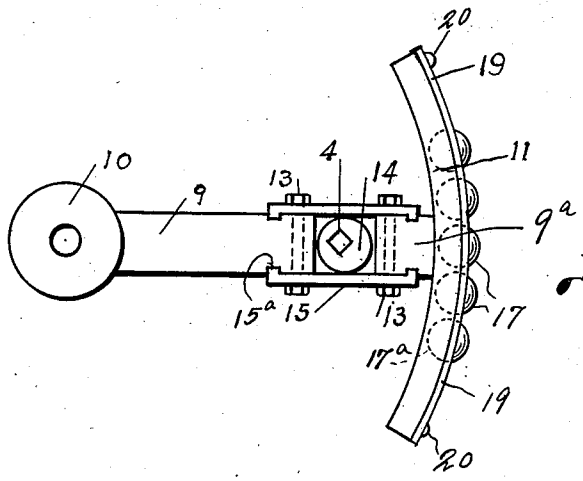

Fig. 3.

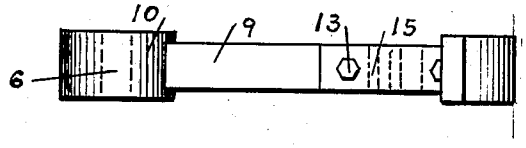

Fig. 4.

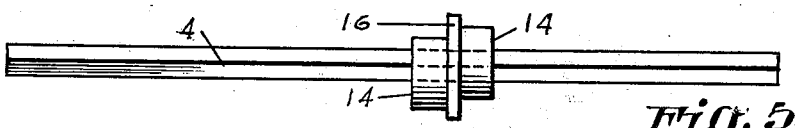

Fig. 5.

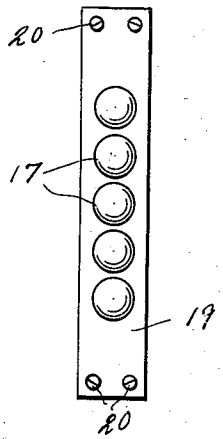

Fig. 6.

Inventors
H.S. Chiles
& F. L. Geiger.
per Watson E. Coleman
Attorney

Patented Apr. 30, 1935 1,999,956

UNITED STATES PATENT OFFICE

1,999,956

THERAPEUTIC APPLIANCE

Herbert S. Chiles and Frank L. Geiger,
Tampa, Fla.

Application July 26, 1932, Serial No. 624,863

2 Claims. (Cl. 128—49)

This invention relates to therapeutic appliances and particularly to those appliances by which vibrations are transmitted to the body of the patient.

The general object of this invention is to provide an apparatus of this character which is very simple, which is beneficial to the muscular tissues and nerves, which will stimulate blood circulation, reduce fatty tissues and which is adapted to be used in all cases where hand massage or mechanical massage or vibration is now used.

A further object is to provide a vibrator or massager of this character comprising a supporting frame carrying a plurality of pivoted arms, the arms having applicators at their extremities and provide motor operated means whereby these arms may be oscillated upon their pivotal centers to thereby exert a vibratory and rubbing action upon the parts to which the instrument is applied.

Other objects will appear in the course of the following description.

Our invention is illustrated in the accompanying drawings, wherein:—

Figure 1 is a top plan view of our appliance;

Figure 2 is a front elevation thereof;

Figure 3 is a side elevation of one of the vibrator arms and a modified form of applicator;

Figure 4 is a top plan view of an arm and applicator shown in Figure 1, and

Figure 5 is an elevation of the eccentric supporting shaft with a pair of eccentrics mounted thereon.

Figure 6 is a face view of the applicator shown in Figure 3.

Referring to these drawings, 8 designates a supporting frame held in spaced relation by the bolts 7 and having the handles 5 at its forward end. Mounted upon the rear of this supporting frame is the electric motor 1, the shaft of which carries a band wheel 1a over which a belt 2 passes. This motor is controlled by a switch 12 of any suitable character. Mounted upon the forward end of the frame constituted by the member 8 is the shaft 4 which carries upon it the band wheel or pulley 3 over which the belt 2 passes, thus transmitting power to the shaft 4. The shaft 4, as illustrated in Figure 5 is many-sided in cross section and mounted thereon are a plurality of eccentrics 14 as will be later stated.

Extending through the rear end of the frame formed by the members 8 is a shaft or bolt 6 and oscillatably mounted upon this shaft or bolt are a series of arms 9. These arms at their rear ends are formed with bearing portions 10 through which the shaft 6 passes. Thus the arms 9 may move in a plane at right angles to their length. The arms 9 are formed of two sections 9 and 9a.

The sections 9 and 9a are joined to each other by the yokes 15, the extremities of which are angled and inserted in depressions or grooves 15a formed in the sections 9 and 9a. Bolts 13 pass through these yoke plates 15 and through the sections 9 and 9a to hold the yoke plates in place. The shaft 4 passes through the space between these yoke plates and carries upon it the eccentrics 14 separated from each other by the spacing washers 16. It will be obvious now that as the shaft 4 is rotated by the motor 1, the arms 9 will be given an oscillatory motion in a plane at right angles to the axis 6 and that if the eccentrics 14 are disposed so as to project in different directions, certain of the arms 9 will be moving upward and certain of them will be moving downward at each instant of operation.

Mounted upon the sections 9a of the arms 9 are the arcuate applicators 11. Preferably the outer faces of the applicators will be recessed as shown in Figure 3 at 17a to receive the balls 17, these balls being held in place by a plate 19 attached at its ends to the ends of the arcuate applicator 11 by means of the screws 20. The arcuate applicators 11 as shown in Figure 3 have their operative faces concentric with the axis of oscillation and as shown in Figure 2, these faces are relatively narrow as compared with their length in the direction of their oscillatory movement. The massaging surface is thus composed of a plurality of closely adjacent relatively narrow portions which are movable relative to each other, each massaging surface or member 11 having its movement at any instant at a different phase of oscillation from that of the adjacent applicator but in all phases of oscillation, the surface remains of uniform curvature.

In the use of this apparatus, the frame is supported in any suitable manner, either supported by hand or mounted upon a suitable support, and the applicators applied to the body at the point desired. The electrical motor 1 operates to cause the applicators to move vertically and exert a massaging and vibratory action upon the body. The eccentrics 14 are capable of being removed from the shaft 4 so as to dispose the eccentrics in different relations to each other at any desired angle to secure a variable motion.

It is to be understood that while we have shown a square shaft and the eccentric as having square eyes, any other means of mounting the eccentrics upon the shaft for rotation therewith may be used. By having the shaft square, however,

it is possible to remove the eccentrics and dispose them at any desired angle with relation to each other. While we have shown an applicator of a certain form, it will be understood that these applicators may be of any desired shape or size and constructed of rubber, fibre fabric, metal, glass or any other suitable material and it is to be also understood that these applicators may be varied with relation to each other so that certain applicators may be provided with rotatable balls, other applicators with other forms of knobs or with simply a covering of textile fabric, etc. In Figures 1, 2 and 4, however, the applicators are shown as being smooth faced or free from balls or knobs. It is also to be understood that many modifications might be made in the details of construction without departing from the spirit of the invention as defined in the appended claims.

We claim:—

1. A massaging apparatus of the character described, comprising a supporting frame, a series of arms pivotally mounted upon said frame for oscillation around a common axis in planes at right angles to the axis upon which they oscillate, the arms being formed in two sections, the outer section of each arm carrying an applicator concentric to the axis of the arm, a pair of detachable yoke plates connecting the sections of each arm and spacing them from each other, a shaft passing between all of said pairs of yoke plates, eccentrics, one for each arm disposed on said shaft and between the pairs of yoke plates to engage therewith to cause oscillation of the arms, and power operated means for driving said shaft.

2. A massaging apparatus of the character described comprising a supporting frame, a series of arms pivotally mounted upon said frame for oscillation around a common axis in planes at right angles to the axis upon which they oscillate, the arms being formed in two sections, the outer section of each arm carrying an applicator having an outer surface concentric to the axis of the arm, yoke plates spacing the sections of each arm from each other, the sections of the arms being recessed upon their upper and lower faces, the yoke plates having flanges engaging in said recesses, both passing through the arm sections and through said yoke plates to detachably hold the yoke plates in place, a shaft passing between all of the pairs of yoke plates, eccentrics one for each arm disposed on said shaft and between the pairs of yoke plates and engaged therewith to cause oscillation of the arms, and power operated means for driving the shaft.

HERBERT S. CHILES.
FRANK L. GEIGER.