Aug. 18, 1936. S. MADSEN 2,051,341

STORM AND AUXILIARY SASH HANGER

Filed June 18, 1934

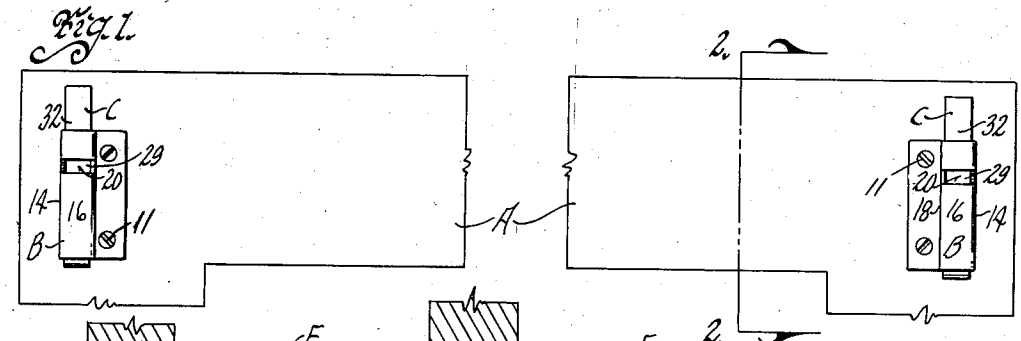

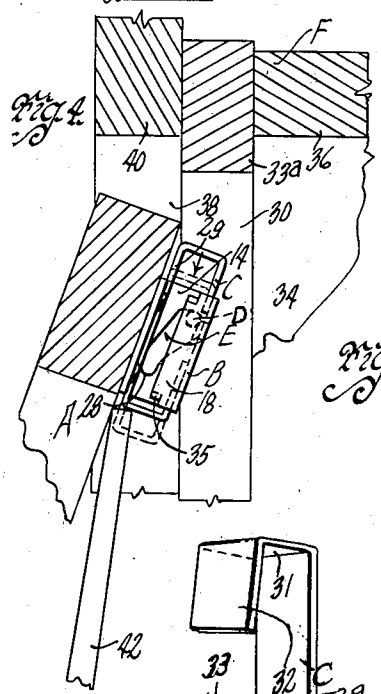

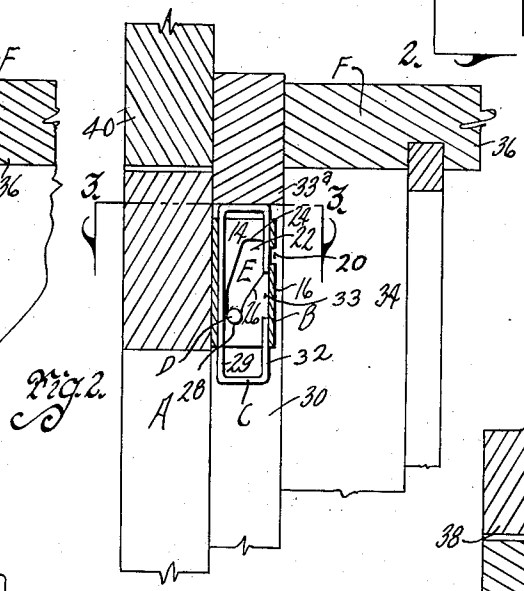

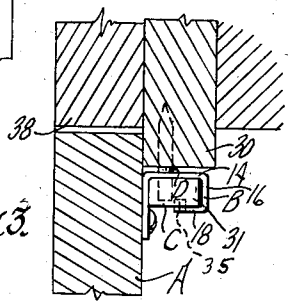

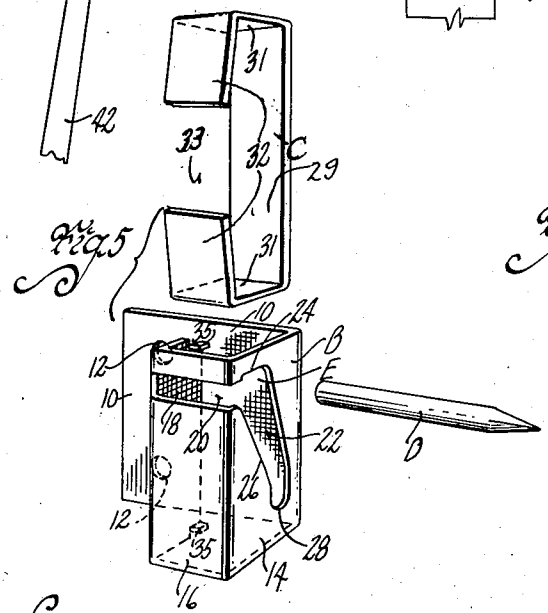

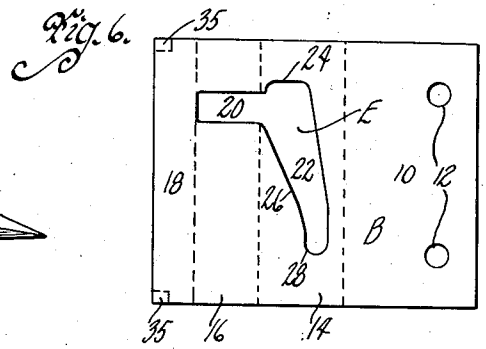

Witness
Edw. Dubs

Inventor
Sern Madsen
By Bair, Freeman & Sinclair
Attorneys

Patented Aug. 18, 1936 2,051,341

UNITED STATES PATENT OFFICE

2,051,341

STORM AND AUXILIARY SASH HANGER

Sern Madsen, Clinton, Iowa, assignor to George L. Curtis, Eugene J. Curtis, and Charles A. Armstrong, all of Clinton, Iowa

Application June 18, 1934, Serial No. 731,059

15 Claims. (Cl. 16—172)

The object of my invention is to provide a storm and auxiliary sash hanger which is simple, durable and compartively inexpensive to manufacture.

A further object is to provide a hanger means for auxiliary sashes such as storm sashes and screen sashes which permits the bottom end of a sash to swing outwardly for ventilation, for washing windows, or for convenience in hanging, yet the hanging means being so constructed and operated that the auxiliary sash is permanently locked so that it cannot fall off until locking elements associated with it are manually adjusted to positions permitting removal of the sash from the window frame.

A further object is to provide a sash hanger which permits one person to easily apply or remove an auxiliary sash with respect to a window frame while being positioned either on the outside or the inside of the frame.

A further object is to provide a hanger which can be easily hooked without having to swing the sash out to a considerable angle when applying or removing it.

Still a further object is to provide a sash hanger having a locking element which automatically locks the sash against removal, yet allows for it to be swung outwardly with the bracket acting as a hinge whenever desired.

With these and other objects in view my invention consists in the construction, arrangement and combination of the various parts of my device, whereby the objects contemplated are attained, as hereinafter more fully set forth, pointed out in my claims, and illustrated in the accompanying drawing, in which:

Figure 1 is an inside elevation of the top end of a sash to which brackets embodying my invention have been secured.

Figure 2 is a vertical sectional view through a window frame showing an auxiliary sash in assembled position relative thereto and showing the coaction of the brackets shown in Figure 1 with a pin applied to the window frame.

Figure 3 is a sectional view on the line 3—3 of Figure 2 showing a plan view of the hanger bracket.

Figure 4 is a sectional view similar to Figure 2 showing the auxiliary sash being installed.

Figure 5 is a perspective view of one unit of the sash hanger, preferably two of such units being used on one sash; and

Figure 6 is a layout view of the blank used for forming the bracket which attaches to the sash.

On the accompanying drawing, I have used the reference character A to indicate an auxiliary sash such as a storm sash or screen sash. The invention is particularly applicable to these two types of sashes, although it can be used for any other type of closure for a window frame or any other type of frame if desired. Accordingly, I have merely illustrated the frame of the sash A and not any glass, screen or other covering therefor.

My sash hanger includes a bracket B, a locking element C and a pin D which are best shown in Figure 5. The bracket B is a blank of sheet metal formed into a substantially channel-shaped member having an attaching flange 10, a web 14 and a flange 16. The bracket also has a flange 18 which extends part way toward the flange 10 but does not extend entirely to it as will be seen by examining Figure 3.

The flange 16 and the web 14 of the bracket B are provided with a hook-like slot E. The slot E has a portion 20 in the flange 16, an inclined portion 22 in the web 14 and a hook portion 24 also in the web 14. The bottom end of the slot E is indicated at 28.

Slidably associated with and carried by the bracket B is a holding or locking element C. It comprises a strip of sheet metal, preferably resilient in character, having a web 29 and flanges 31 and 32. It is designed to slide in the box-like bracket B and to frictionally engage the bracket so as to be normally retained in any position to which it is slid. The flanges 32, for instance, may be formed with a slight inclination as shown in Figure 5 so that the locking element has to be contracted to fit in the bracket B and in tending to expand, will frictionally engage the bracket.

The opening indicated at 33 between the flanges 32 is designed to register with the slot 20 when the locking element C is in a raised position with respect to the bracket B as shown in Figure 5. When the locking element is in a lowered position as in Figure 2, one of the flanges 32 closes the slot 20. To limit the movement of the locking element relative to the bracket, any means may be provided such as small ears 35 bent inwardly from the flange 18 as shown in Figure 5 (although these are not so bent until after the locking element is in assembled position). The upper ear 35 will engage the upper flange 31 to prevent excessive downward movement of the locking element relative to the bracket, while the lower ear 35 will engage the lower flange 31 to prevent excessive upward movement of the locking element relative to the bracket.

The pin D is merely a headless nail or a head-

less screw if desired. It is designed to be driven at the proper point in a side blind stop **30** of a window frame F. Other portions of the frame F illustrated on the drawing are a head blind stop **33a**, side jamb **34**, head jamb **36** and side and top outer casings **38** and **40**. The brackets B are designed for attachment to the frame of the sash A adjacent the upper inner corners in about the position shown in Figure 1.

Any means may be provided for attaching the brackets to the sash such as screws **11** extended through screw holes **12** of the flange **10**. The brackets are set inward from the side edges far enough to clear the side blind stops **30** (see Figure 3) and down far enough so that they clear the head blind stop **33***a* (see Figure 2). With the sash A in the position shown in Figure 2, the pins D are located at the ends **28** of the slots E.

In installing the sash, after the hardware is applied, the locking elements C must be in raised position so that the slots are open. Then the installer, either from the inside or the outside of the frame F, can lift the sash to proper position for the slots **20** to receive the pins D and then permit the sash to rest with the hook portions **24** of the slots E engaging the upper edges of the pins D such as shown in Figure 4. The installer can then get a better grasp on the sash for raising it and pulling the inner end inwardly.

During the raising of the sash, the locking element C engages the head blind stop **33a** so that it cannot move further upwardly, but as the sash is moved upwardly, the bracket B will also be moved upwardly, thus moving the locking element downward relative to the bracket to the closed position of Figure 2.

At the same time, the pins D will engage inclined edges **26** of the slots E to draw the upper end of the sash inwardly to the proper position. The bottom end of the sash may then be hooked with hooks in the ordinary manner, or any other type of holding hardware used can be manipulated to retain the lower end of the sash closed.

Subsequently, when it is desired to swing the sash outwardly but not remove it, the hook means at the bottom can be unhooked and the sash can be swung outwardly as desired without danger of it becoming unhooked as the slot **20** is closed by the upper flange **32** of the locking element C. To remove the sash, the operator can manually push the locking element C upwardly if he is on the inside of the window frame, while if he is on the outside, he can use an elongated element such as a yard stick or a piece of lath **42** for pushing the lock upwardly for unlocking it. Thereafter the brackets can be unhooked from the pins and the sash removed.

Some changes may be made in the construction and arrangement of the parts of my device without departing from the real spirit and purpose of my invention, and it is my intention to cover by my claims, any modified forms of structure or use of mechanical equivalents, which may be reasonably included within their scope.

I claim as my invention:

1. Hanger means for supporting a sash on a frame comprising a projection adapted for mounting on the frame and a hook-like hanger adapted for mounting on the sash for limited sliding coaction therewith and a movable keeper member associated with said hook-like hanger to close the hook opening thereof, said keeper member being positioned for automatic movement to closed position by engagement with said frame upon the sash being slid from open assembled to closed assembled position with respect to the frame.

2. Hanger means for a sash comprising a pin-like member for projection from a frame and a hook-like member for projection from a sash, the hook of said hook-like member providing temporary support in lower than normal position for the sash on said pin-like member and locking means coacting with said pin-like member and said hook-like member to prevent unhooking of the latter from the former, said hook-like member having an inclined portion engaged with the pin-like member to draw said sash inwardly as it is moved longitudinally upward from said lower than normal position to assembled position relative to the window frame.

3. Hanger means for a sash comprising an inwardly opening recessed member for attachment to a sash adjacent its top inner face, a projection on a frame to be engaged by said member, said member having a slot permitting sliding movement vertically of said sash relative to said frame and a locking element carried by and movable relative to said member for manual movement to recess opening position and automatic movement to recess closing position by engagement with said frame upon said sash being slid vertically relative to said frame.

4. Hanger means for an auxiliary sash comprising a hook member adapted to be applied to said sash adjacent its top, a pin projecting from the side of a frame to coact with said hook member and a locking element operable to permanently engage said hook member with said pin, said locking element being actuable from unlocked position to locked position by sliding movement of the auxiliary sash relative to said frame and by engagement with said frame during the final portion of the movement of the sash to closed position.

5. Hanger means for supporting a sash member relative to a frame member comprising a bracket and a pin, said bracket being substantially channel-shaped and having one flange adapted to be secured to one of said members and a slot through its other flange for the shank of said pin to pass through, the web of said bracket having a continuation of said slot formed at an angle to said attaching flange whereby longitudinal movement of the sash member relative to the frame member, when such extension of the slot is associated with the pin, draws said sash member toward said frame member.

6. Hanger means for supporting a sash member relative to a frame member comprising a bracket and a pin, said bracket being substantially channel-shaped and having one flange adapted to be secured to one of said members and a slot through its other flange for the shank of said pin to pass through, the web of said bracket having a continuation of said slot formed at an angle to said attaching flange whereby longitudinal movement of the sash member relative to the frame member, when such extension of the slot is associated with the pin, draws said sash member toward said frame member and a locking element slidable through the channel of said channel shaped bracket and movable to positions opening or closing said slot.

7. Hanger means for supporting a sash member relative to a frame member comprising a bracket and a pin, said bracket being slotted for reception of said pin and a locking element carried in said bracket and movable to positions opening or closing said slot, said locking element

being expansive and initially larger than the interior of said bracket and thereby frictionally engaged with said bracket when therein to normally remain in a predetermined position relative thereto.

8. Hanger means for supporting a sash member relative to a frame member comprising a bracket and a pin, said bracket being substantially channel-shaped and having one flange adapted to be secured to one of said members and a slot through its other flange for the shank of said pin to pass through, the web of said bracket having a continuation of said slot formed at an angle to said attaching flange whereby longitudinal movement of the sash member relative to the frame member, when such extension of the slot is associated with the pin, draws said sash member toward said frame member and a locking element carried by said bracket and movable to positions opening or closing said slot, said locking element being expansive and initially larger than the interior of said bracket and thereby frictionally engaged with said bracket when therein to normally remain expansive and initially larger than the interior of said bracket and thereby in a predetermined position relative thereto.

9. Hanger means for supporting a sash member relative to a frame member comprising a bracket and a pin, said bracket being substantially channel-shaped and having one flange adapted to be secured to one of said members and a slot through its other flange for the shank of said pin to pass through, the web of said bracket having a continuation of said slot formed at an angle to said attaching flange whereby longitudinal movement of the sash member relative to the frame member, when such extension of the slot is associated with the pin, draws said sash member toward said frame member, a locking element slidably carried in said bracket and slidable to positions opening or closing said slot and means on said bracket to limit the sliding motion of said locking element relative thereto.

10. Hanger means for supporting a sash member relative to a frame member comprising a bracket and a pin, said bracket being slotted for reception of said pin, a locking element carried by said bracket and slidable to positions opening or closing said slot, said locking element being frictionally engaged with said bracket to normally remain in locking or unlocking position relative thereto and means on said bracket to limit the sliding motion of said locking element relative thereto.

11. Hanger means for supporting a sash member relative to a frame member comprising a bracket and a pin, said bracket being substantially channel-shaped and having one flange adapted to be secured to one of said members and a slot through its other flange for the shank of said pin to pass through, the web of said bracket having an continuation of said slot formed at an angle to said attaching flange whereby longitudinal movement of the sash member relative to the frame member, when such extension of the slot is associated with the pin, draws said sash member toward said frame member, the portion of said slot in said web also having a hook portion normally engaging said pin when the weight of said bracket and sash member are permitted to be carried by said pin.

12. Hanger means for a sash comprising a first hanger member for application to a side blind stop and projecting toward the vertical center line of the sash, and a second hanger member to coact therewith, said second member being for application to the inside face of a sash, said second member comprising a pair of elements, one for attachment to the sash and having an entrance slot and a mounting slot and a locking element slidable to close said entrance slot to prevent disengagement of said sash but leave said sash member free to travel in said mounting slot.

13. Hanger means for a sash comprising a first hanger member for application to a side blind stop and projecting toward the vertical center line of the sash, and a second hanger member to coact therewith, said second member being for application to the inside face of a sash, said second member comprising a pair of elements, one for attachment to the sash and having an entrance slot and a mounting slot and a locking element slidable to close said entrance slot to prevent disengagement of said sash but leave said sash member free to travel in said mounting slot, said locking element frictionally engaging the other element so that it will normally remain in any position to which it is adjusted.

14. Hanger means for a sash comprising a first hanger member for application to a side blind stop and projecting toward the vertical center line of the sash, and a second hanger member to coact therewith, said second member being for application to the inside face of a sash, said second member comprising a pair of elements, one for attachment to the sash and having an entrance slot and a mounting slot and a locking element slidable to close said entrance slot to prevent disengagement of said sash but leave said sash member free to travel in said mounting slot, said locking element being engageable with a part of the window frame during installation of the sash to automatically cause it to close said entrance slot when said sash is moved to installed position.

15. Hanger means for a sash comprising a first hanger member for application to a side blind stop and projecting toward the vertical center line of the sash, and a second hanger member to coact therewith, said second member being for application to the inside face of a sash, said second member comprising a pair of elements, one for attachment to the sash and having an entrance slot and a mounting slot and a locking element slidable to close said entrance slot to prevent disengagement of said sash but leave said sash member free to travel in said mounting slot, means to limit the travel of said locking element, said locking element being frictionally engaged with the other element to normally retain it in any position to which it is adjusted between said limits of travel.

SERN MADSEN.