PCT WORLD INTELLECTUAL PROPERTY ORGANIZATION
International Bureau

INTERNATIONAL APPLICATION PUBLISHED UNDER THE PATENT COOPERATION TREATY (PCT)

(51) International Patent Classification 6 :
G01S 5/02, 5/10, 1/02, H04B 7/185

A1

(11) International Publication Number: **WO 95/08779**

(43) International Publication Date: 30 March 1995 (30.03.95)

(21) International Application Number: PCT/US94/10726

(22) International Filing Date: 22 September 1994 (22.09.94)

(30) Priority Data:

08/126,254	22 September 1993 (22.09.93)	US
08/135,879	13 October 1993 (13.10.93)	US

(81) Designated States: AU, BR, CA, JP, RU, European patent (AT, BE, CH, DE, DK, ES, FR, GB, GR, IE, IT, LU, MC, NL, PT, SE).

Published
With international search report.
Before the expiration of the time limit for amending the claims and to be republished in the event of the receipt of amendments.

(71) Applicant: THE BOARD OF TRUSTEES OF THE LELAND STANFORD JUNIOR UNIVERSITY [US/US]; Suite 350, 900 Welch Road, Palo Alto, CA 94304 (US).

(72) Inventor: COHEN, Clark, Emerson; 317 El Carmelo Avenue, Palo Alto, CA 94306 (US).

(74) Agents: KNAUER, Stephen, M. et al.; Flehr, Hohbach, Test, Albritton & Herbert, Suite 3400, 4 Embarcadero Center, San Francisco, CA 94111-4187 (US).

(54) Title: SYSTEM AND METHOD FOR GENERATING PRECISE CODE BASED AND CARRIER PHASE POSITION DETERMINATIONS

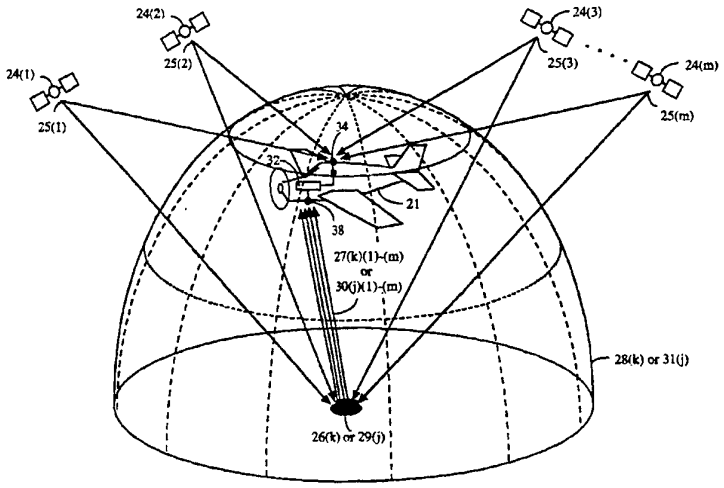

(57) Abstract

A GPS system that includes a GPS beacon (26) that receives a plurality of GPS signals (25), each having a carrier component and a pseudo-random code component, and generates in response thereto a plurality of beacon signals (27) having a carrier component phase locked to one of the carrier components and a pseudo-random code phase locked to one of the pseudo-random code components of the received GPS signals for transmission. A GPS receiver (32) receives the transmitted signals and makes Code Based Differential GPS position determinations by making range measurements for each of the pseudo-random code components of the GPS (25) and beacon (27) signals and in response computing values representing a position. Additionally, the GPS receiver can make Carrier Phase Differential GPS position determinations.

FOR THE PURPOSES OF INFORMATION ONLY

Codes used to identify States party to the PCT on the front pages of pamphlets publishing international applications under the PCT.

AT	Austria	**GB**	United Kingdom	**MR**	Mauritania
AU	Australia	**GE**	Georgia	**MW**	Malawi
BB	Barbados	**GN**	Guinea	**NE**	Niger
BE	Belgium	**GR**	Greece	**NL**	Netherlands
BF	Burkina Faso	**HU**	Hungary	**NO**	Norway
BG	Bulgaria	**IE**	Ireland	**NZ**	New Zealand
BJ	Benin	**IT**	Italy	**PL**	Poland
BR	Brazil	**JP**	Japan	**PT**	Portugal
BY	Belarus	**KE**	Kenya	**RO**	Romania
CA	Canada	**KG**	Kyrgystan	**RU**	Russian Federation
CF	Central African Republic	**KP**	Democratic People's Republic of Korea	**SD**	Sudan
CG	Congo			**SE**	Sweden
CH	Switzerland	**KR**	Republic of Korea	**SI**	Slovenia
CI	Côte d'Ivoire	**KZ**	Kazakhstan	**SK**	Slovakia
CM	Cameroon	**LI**	Liechtenstein	**SN**	Senegal
CN	China	**LK**	Sri Lanka	**TD**	Chad
CS	Czechoslovakia	**LU**	Luxembourg	**TG**	Togo
CZ	Czech Republic	**LV**	Latvia	**TJ**	Tajikistan
DE	Germany	**MC**	Monaco	**TT**	Trinidad and Tobago
DK	Denmark	**MD**	Republic of Moldova	**UA**	Ukraine
ES	Spain	**MG**	Madagascar	**US**	United States of America
FI	Finland	**ML**	Mali	**UZ**	Uzbekistan
FR	France	**MN**	Mongolia	**VN**	Viet Nam
GA	Gabon				

SYSTEM AND METHOD FOR GENERATING PRECISE CODE BASED AND CARRIER PHASE POSITION DETERMINATIONS

This application is a continuation of U.S. patent application 08/126,254 filed on September 22, 1993 and a continuation-in-part of U.S. patent application Ser. No. 08/036,319 filed March 23, 1993. The United States Government may have certain rights in any patent issuing from this application pursuant to Grant DOT93-G-004 between the U.S. Department of Commerce and Stanford University.

FIELD OF THE INVENTION

The present invention relates generally to systems and methods for generating precise position determinations for any land, sea, air, or space vehicle. In particular, it pertains to aircraft landing systems and methods.

BACKGROUND OF THE INVENTION

There has traditionally been a need for systems and methods which allow a user to make extremely precise position determinations. In fact, a number of attempts have been made at developing these kinds of systems and methods. However, they all suffer from serious problems which render them unfeasible or inaccurate.

This is particularly true in the case of aircraft landing systems and methods. The current system, the Instrument Landing System (ILS), was developed decades ago and is very expensive to install and maintain.

A proposed alternative to ILS is the Microwave Landing System (MLS). It however is also expensive to install and maintain.

Other proposed alternatives are based on the Global Positioning System (GPS). GPS involves a constellation of 24 satellites placed in orbit about the Earth by the United

States Department of Defense. Each satellite continuously broadcasts a GPS signal. This GPS signal contains an L-band carrier component (L1) transmitted at a frequency of 1.575 GHz. The L1 carrier component is modulated by a coarse acquisition (C/A) pseudo random (PRN) code component and a data component.

The PRN code provides timing information for determining when the GPS signal was broadcast. The data component provides information such as the satellite's orbital position. The carrier component allows a receiver to easily acquire the GPS signal.

Position determination using Conventional Code Based GPS is well known in the art. In Conventional Code Based GPS, a receiver makes range computations between an antenna coupled to the receiver and each of at least four GPS satellites in view. The receiver makes these computations based on phase measurements for the PRN code of each of the received GPS signals and the satellite orbital position information obtained from the data component of each GPS signal. By receiving four different GPS signals, the receiver can make fairly accurate position determinations.

However, Conventional Code Based GPS only allows a user to determine his actual location to within tens of meters. In applications such as aircraft landings, position accuracies of one foot must be achieved. Therefore, Conventional Code Based GPS is not suitable for these applications.

A more accurate version of GPS is Code Based (or Ordinary) Differential GPS. Various versions of Code Based Differential GPS are well known in the art. These versions involve the same kind of ranging computations as are made with Conventional Code Based GPS, except that a ground reference receiver at a precisely known location is utilized. Ideally, satellite ranging errors will affect the position determinations made by the user's receiver in the same way as they will the position determinations made by the nearby ground receiver. Since the location of the ground receiver is already known, the ground receiver can compare the position determination it has calculated with the actual known

position. As a result, the ground receiver can accurately detect ranging errors.

From these errors, the ground receiver can compute suitable corrections which are transmitted by a traditional digital data link to the user's receiver. The user's receiver can then apply the corrections to its own ranging measurements so as to provide accurate real time position determinations.

Also, a ground based beacon or pseudolite (i.e. ground based pseudo satellite) can be used to transmit these error corrections along with an unassigned PRN code. The unassigned PRN code enables the user's receiver to make a redundant fifth ranging measurement for even greater precision. And, in some cases, it enables the user's receiver to make a necessary fourth ranging measurement where one of the other GPS signals has been lost.

However, these versions of Code Based Differential GPS suffer from several drawbacks which limit their use. First, as was indicated earlier, a digital data link is required for transmitting the differential corrections to the user's receiver. Since these corrections are transmitted in digital form, bit transmission errors could lead to serious position determination errors. Second, the latency of the data transmission could also lead to serious position determination errors since it often takes seconds to measure, package, transmit, demodulate, and unpackage the transmitted data stream. Furthermore, even if these problems are eliminated, position determinations using Code Based Differential GPS are only accurate to within several meters. Although such accuracy may be suitable for general navigation purposes, it is not suitable for aircraft landing applications, since, as indicated earlier, aircraft landing systems must be accurate to within a foot.

An extremely accurate form of GPS is Carrier Based Differential GPS. This form of GPS utilizes the 1.575 GHz carrier component of the GPS signal on which the PRN code and the data component are superimposed.

Current versions of Carrier Based Differential GPS involve generating position determinations based on the

measured phase differences at two different antennas for the carrier component of a GPS signal. However, this technique initially requires determining how many integer wavelengths of the carrier component exist between the two antennas at a particular point in time. This is called integer ambiguity resolution.

A number of approaches currently exist for integer ambiguity resolution. However, all of them suffer from serious problems which render them unfit for precise position determinations in applications such as a aircraft landing.

One approach is Integer Searching using redundant measurements. This involves receiving more than the standard four GPS signals in order to sort out the correct combination of integer ambiguities. The different combinations of integer candidates are systematically checked against a cost function until an estimated correct set is found. However, for search volumes of just a few meters, the checked combinations can number in the hundreds of millions. As a result, this approach has a propensity to arrive at wrong solutions. Furthermore, the configuration of the constellation of GPS satellites can only guarantee that four satellites will be in view at any given time. Therefore, any application requiring precise position determinations at any given time must not rely on redundant satellites for reliable resolution of the integer ambiguities.

Another approach is Narrow Correlator Spacing. This technique involves using the PRN code of the GPS signal to bound the integer ambiguities. However, a significant amount of the time it can yield position determination errors of as much as several meters. This does not provide the kind of consistency which is required in aircraft landing applications.

Still another approach is Dual Frequency Wide-Laning. This approach also utilizes a second GPS signal broadcast by each satellite. This second GPS signal has an L-band carrier component (L2) transmitted at a frequency of 1.227 GHz. The L2 carrier component and the L1 carrier component are difference so as to form a signal having an effective

wavelength that is much longer than either of the two carrier components. From this signal, it is relatively easy to resolve the integer ambiguities. However, the L2 component is not available for civilian use. Although the denial of the second carrier component can be countermeasured with cross correlation technology, the performance of this type of technology is unproven and very expensive to implement.

One successful approach to integer ambiguity resolution is motion-based and has been utilized in static surveying applications. This approach involves taking a number of phase measurements while the user's antenna and the reference antenna are stationary. These phase measurements are made over a period of about an hour. The phase measurements made during the slowly changing geometry of the GPS satellites will reveal the integer ambiguities. But, in many situations in which precise position determinations are required, such as aircraft landing, it would be impractical to require the user's antenna to remain stationary for 15 minutes while the integer ambiguities are resolved.

Another motion-based approach has been used for aircraft attitude determination. It involves placing an antenna on the tail, on the fuselage, and on each wing tip. The antenna on the fuselage serves as the reference antenna. The integer ambiguities can be resolved in seconds by rotating the aircraft and taking several phase measurements. Taking the phase measurements during this rapid change in geometry with respect to the slowly changing GPS satellite geometry will reveal the integer ambiguities. However, since the reference antenna and the other antennas are fixed to the aircraft, this approach is limited to attitude determinations and is not suitable for precise position determinations for the aircraft itself.

OBJECTS OF THE INVENTION

It as an object of the present invention to provide a GPS system and method for making Code Phase Differential GPS

position determinations without latency and without relying on code range measurements made by a reference receiver.

It is yet another an object of the invention to provide a reference GPS system that enables a mobile GPS system to make Code Phase Differential GPS position determinations without latency and without relying on code range measurements made by the reference system.

It is yet further an object of the invention to provide a mobile GPS receiver that makes Code Phase Differential GPS position determinations without latency and without relying on code range measurements made by a reference GPS system.

It is still another object of the invention to provide a Carrier Phase Differential GPS system and method for making precise position determinations to within centimeters of the exact location without latency and without relying on carrier phase measurements made by a reference receiver.

It is further an object of the invention to provide a reference GPS system that enables a mobile GPS system to make Carrier Phase Differential GPS position determinations to within centimeters of the exact location without latency and without relying on carrier phase measurements made by the reference system.

It is also an object of the invention to provide a mobile GPS receiver that makes Carrier Phase Differential GPS position determinations to within centimeters of the exact location without latency and without relying on carrier phase measurements made by a reference GPS system.

SUMMARY OF THE INVENTION

The foregoing and other objects of the invention are achieved by a GPS system that includes a GPS beacon beacon that receives a plurality of GPS signals. Each of the GPS signals haa a carrier component and a pseudo-random code component. The beacon generates in response to the received GPS signals a plurality of beacon signals. Each of the plurality of beacon signals has a carrier component phase locked to one of the carrier components of the received GPS

signals and a pseudo-random code component phase locked to one of the pseudo-random code components of the received GPS signals. The beacon then transmits the plurality of beacon signals.

The system also includes a GPS receiver. The GPS receiver can make Code Based Differential GPS position determinations by making range measurments for each of the pseudo-random code components of the GPS and beacon signals and in response computing values representing a position.

Additionally, the GPS receiver can make Carrrier Phase Differential GPS position determinations by first making phase measurments for each of the carrier components of the GPS and beacon signals at a pluarlity of measurment epochs during an initialization period. It then computes initialization values in response to these phase measurements for the GPS and beacon signals. Then, at a subsequent epoch after the initialization period, it computes a position in responsive to the initialization values and in response to the phase values for the GPS and beacon signals measured at the subsequent measurment epoch.

BRIEF DESCRIPTION OF THE DRAWINGS

The foregoing and other objects of the invention will become more apparent on reading the following detailed description and upon reference to the drawings, in which:

Figure 1 shows an omni-marker beacon or pseudolite in accordance with the present invention;

Figure 2 shows a general view of a GPS system which employs two initialization omni-marker beacons and three reference omni-marker beacons;

Figure 3 shows a general view of a GPS system which employs two initialization omni-marker beacons and one reference omni-marker beacon;

Figure 4 shows a general view of a GPS system which employs one initialization omni-marker beacon and one reference omni-marker beacon;

Figure 5 shows a more detailed view of the GPS system shown in Figure 2;

Figure 6 shows an alternative configuration to that shown in Figure 5;

Figure 7 provides an illustration of the operation of the omni-markers of Figures 2-6 for Code Based Differential GPS.

Figure 8 shows the vector relationships associated with the configurations of Figures 2-6;

Figure 9 shows the vectors representing the surveyed positions of antennas which are mounted on an airplane with respect to the body coordinate system of the airplane;

Figure 10 shows the rotation of the body coordinate system of the airplane with respect to the runway coordinate system;

Figure 11 shows the use of an omni-marker beacon in accordance with the present invention for wide area ranging and positioning;

Figure 12 provides an illustration of how the integer ambiguities at an initial epoch arise;

Figure 13 provides an illustration at later epoch after the initial epoch of Figure 12;

Figure 14 illustrates elimination of cross track uncertainty by use of two initialization pseudolites;

Figure 15 illustrates elimination of cross track error by overflying a single initialization pseudolite twice;

Figure 16 shows a detailed description of an omni-marker in accordance with the present invention;

Figure 17 shows a detailed description of a signal processing channel of an omni-marker in accordance with the present invention;

Figure 18 shows a detailed description of an alternative omni-marker in accordance with the present invention;

Figure 19 shows a detailed description of a signal processing channel of the omni-marker in Figure 18;

Figure 20 provides a detailed illustration of a portion of a GPS mobile system which is part of the entire GPS system of Figure 2-6 and which includes a GPS position receiver and several antennas;

Figure 25 shows another embodiment of the GPS mobile system where an inertial measurement unit is employed;

Figure 22 shows another embodiment for the GPS mobile system where a single antenna and a single GPS position receiver are employed.

DETAILED DESCRIPTION OF THE INVENTION

Figures 1-22 provide illustrations of the invention described herein. In these figures, like components are designated by like numerals.

OVERVIEW

Figure 1 shows the kth omni-marker beacon 26(k) or the jth omni-marker beacon 29(j) of Figures 2-4. As will be evident shortly, the omni-marker beacon 26(k) or 29(j) is a specialized pseudolite (i.e. ground based satellite) and is located at a known location.

The omni-marker 26(k) or 29(j) receives the m GPS signals 25(1)-(m) respectively broadcast by the m GPS satellites 24(1)-(m). In response, it phase locks the carrier component and the PRN code component of each of the acquired GPS signals 25(1)-(m) and generates and transmits to airplane 21 the corresponding beacon marker signals 27(k)(1)-(m) or 30(j)(1)-(m) together in the form of a low power signal bubble 28 or 31. Each of the beacon marker signals 27(k)(1)-(m) or 30(j)(1)-(m) includes a carrier component that is phase locked to the carrier component of one of the corresponding received GPS signals 25(1)-(m) and also includes a unique PRN code component that is phase locked to and corresponds to the PRN code component of that same GPS signal 25(1)-(m). Thus, the out-going carrier and PRN code components of each of the beacon marker signals 27(k)(1)-(m) or 30(j)(1)-(m) is exactly phase coherent with respect to their incoming counterparts in the GPS signals 25(1)-(m).

The GPS position receiver 32 on board the airplane 21 then receives the GPS signals 25(1)-(m) and the beacon marker

signals 27(k)(1)-(m) or 30(j)(1)-(m). As will be explained shortly, the receiver 32 can make Code Based Differential GPS position determinations and Carrier Phase Differential GPS position determinations based on these received signals without relying on the traditional digital data link for supplying differential corrections, PRN code range measurements, or carrier phase measurements made by a reference receiver.

Thus, as will be developed more fully later, the omni-marker beacon 26(k) or 29(j) serves as a channel for relaying information to position receiver 32 for making differential ranging corrections for both Code Based and Carrier Phase Differential GPS position determinations. In addition, it serves as the means for resolving cycle ambiguities for the Carrier Phase Differential GPS position determinations. Moreover, since a digital data link is not required, bit errors and latency cannot corrupt the integrity of the Code Based and Carrier Phase Differential GPS position determinations that position recover 32 can make.

SYSTEM AND METHOD

Figure 2 shows the preferred configuration for a GPS system 20 that generates precise position determinations using Code Based or Carrier Phase Differential GPS. In these figures, an airplane 21 is on final approach trajectory 22 to runway 23. The m GPS satellites 24(1)-(m) at known orbital positions are in view and respectively broadcast the m GPS signals 25(1)-(m).

The GPS signals 25(1)-(m) are L1 C/A code GPS signals. In other words, they contain an L1 carrier component, a C/A PRN code, and a data component. The L1 carrier is a sinusoidal wave transmitted at a frequency of 1.575 GHz. The PRN code comprises a series of variable width pulses broadcast at a frequency of 1.023 MHz. Each of the GPS satellites 24(1)-(m) transmits its own unique PRN code. The information in the data component of each GPS signal 25(1)-(m) includes the orbital position of the GPS satellite 24(1)-(m) which has broadcast

it. This information is provided as a bit stream with a frequency of 50 bits per second.

Reference omni-marker beacons 29(1)-(3) are located at known positions around the runway 22. Omni-marker beacons 29(1)-(3) each separately generate and broadcast four beacon marker signals 30(1)(1)-(m), 30(2)(1)-(m), and 30(3)(1)-(m) in the form of low power signal bubbles 31(1)-(3) in the way described earlier.

Initialization omni-marker beacons 26(1)-(2) are located at known positions on each side of the horizontal component of flight trajectory 22. Omni-marker beacons 26(1)-(2) each separately generate and broadcast four beacon marker signals 27(1)(1)-(m) and 27(2)(1)-(m) in the form of low power signal bubbles 28(1)-(2) in the way described earlier. As is evident from Figure 2, the beacon marker signals 27(1)(1)-(m) and 27(2)(1)-(m) are transmitted at even a lower power than are the beacon marker signals 30(1)(1)-(m), 30(2)(1)-(m), and 30(3)(1)-(m).

Figure 5 shows a more detailed view of the GPS system 20 shown in Figure 2. Located near runway 23 is a ground based GPS reference system 39. It includes the omni-marker beacons 26(1)-(2) and 29(1)-(3). The omni-marker beacons 26(1)-(2) respectively comprise receive antennas 41(1)-(2), transceivers 42(1)-(2), and transmit antennas 43(1)-(2). The omni-marker beacons 29(1)-(3) respectively comprise receive antennas 41(1)-(3), transceivers 44(1)-(3), and transmit antennas 45(1)-(3).

Each of the receive antennas 41(1)-(2) and 44(1)-(3) receives the GPS signals 25(1)-(m) and provides them to the corresponding transceivers 42(1)-(2) and 44(1)-(3). As was suggested earlier, each of the transceivers 42(1)-(2) and 44(1)-(3) phase locks the carrier component and the PRN code component of each of the acquired GPS signals 25(1)-(m). In response, transceivers 42(1)-(2) generate respectively the corresponding beacon marker signals 27(1)(1)-(m) and 27(2)(1)-(m) and transceivers 44(1)-(3) generate respectively the corresponding beacon marker signals 30(1)(1)-(m), 30(2)(1)-(m), and 30(3)(1)-(m).

As was mentioned earlier, each of the generated signals 27(1)(1)-(m), 27(2)(1)-(m), 30(1)(1)-(m), 30(2)(1)-(m), and 30(3)(1)-(m) includes a carrier component that is phase locked to the carrier component of the corresponding received GPS signal 25(1)-(m) and also includes a unique PRN code component that is phase locked to and corresponds to the PRN code component of the corresponding received GPS signal 25(1)-(m). In addition, each of these signals may also include a data component that provides important runway and airport status information and provides the position of the omni-marker beacon 26(1)-(2) or 29(1)-(3) that generated and transmitted the signal.

The generated signals 27(1)(1)-(m) and 27(2)(1)-(m) are respectively transmitted by the transmit antennas 43(1)-(2). The generated signals 30(1)(1)-(m), 30(2)(1)-(m), and 30(3)(1)-(m) are respectively transmitted by the transmit antennas 45(1)-(3).

In order to utilize existing GPS technology and methodology, the beacon marker signals 27(1)(1)-(m), 27(2)(1)-(m), 30(1)(1)-(m), 30(2)(1)-(m), and 30(3)(1)-(m) are L1 C/A GPS signals. In other words, the carrier components of these signals are all L1 band carrier waves generated and transmitted at a frequency of 1.575 GHz and the PRN code component of each of these signals is a C/A code repeated at a frequency of 1.023 KHz. Furthermore, if a data component is included with these signals, it is provided as a bit stream at a frequency of 50 bits per second. However, as one skilled in the art will appreciate, the signals 27(1)(1)-(m), 27(2)(1)-(m), 30(1)(1)-(m), 30(2)(1)-(m), and 30(3)(1)-(m) need not be limited to these L1 C/A GPS signals. Moreover, in order to prevent confusion among receivers of the signals 25(1)-(m), 27(1)(1)-(m), 27(2)(1)-(m), and 30(1)-(m), the PRN code components of the beacon marker signals 27(1)(1)-(m), 27(2)(1)-(m), and 30(1)-(m) are distinct from one another and from the PRN code components of the GPS signal 25(1)-(m). Nevertheless, because of the earlier described PRN code phase locking performed by the omni-marker beacons 26(1)-(2) and 29, the PRN code components of the beacon marker signals

27(1)(1)-(m) respectively correspond to the PRN code components of the GPS signals 25(1)-(m), the PRN code components of the beacon marker signals 27(2)(1)-(m) respectively correspond to the PRN code components of the GPS signals 25(1)-(m), and the PRN code components of the beacon marker signals 30(1)-(m) respectively correspond to the PRN code components of the GPS signals 25(1)-(m).

Figure 6 shows an alternative configuration for the ground reference station 39. In this configuration, the omni-marker beacons 26(1)-(2) respectively comprise collocated receive and transmit antennas 43(1)-(2) and transceivers 42(1)-(2) and the omni-marker beacons 29(1)-(3) comprise transceivers 44(1)-(3) and collocated receive and transmit antennas 45(1)-(3).

Each of the receive and transmit antennas 43(1)-(2) and 45(1)-(3) receives the GPS signals 25(1)-(m) and provides them to the corresponding transceivers 42(1)-(2) and 44(1)-(3). As with the configuration shown in Figure 5, the transceivers 42(1)-(3) respectively each generate m corresponding beacon marker signals 27(1)(1)-(m), 27(2)(1)-(m), and 27(3)(1)-(m) and transceivers 44(1)-(3) respectively each generate m corresponding beacon marker signals 30(1)(1)-(m), 30(2)(1)-(m), and 30(3)(1)-(m).

As with the configuration of Figure 5, each of the generated signals 27(1)(1)-(m), 27(2)(1)-(m), 30(1)(1)-(m), 30(2)(1)-(m), and 30(3)(1)-(m) includes a carrier component that is phase locked to the carrier component of the corresponding received GPS signal 25(1)-(m) and also includes a unique PRN code component that is phase locked to and corresponds to the PRN code component of same GPS signal 25(1)-(m). And, each of these signals may also include a data component that provides important runway and airport status information and also provides the position of the omni-marker beacon 26(1)-(2) or 29(1)-(3) that generated and transmitted the signal.

However, in this case, not only do the receive and transmit antennas 43(1)-(2) and 45(1)-(3) receive the GPS signals 25(1)-(m), but they respectively also transmit the

beacon marker signals 27(1)(1)-(m), 27(2)(1)-(m), 30(1)(1)-(m), 30(2)(1)-(m), and 30(3)(1)-(m). Therefore, in order to provide frequency isolation between these transmitted signals and the received GPS signals, the phase locked L1 carrier components of the beacon marker signals 27(1)(1)-(m), 27(2)(1)-(m), 30(1)(1)-(m), 30(2)(1)-(m), and 30(3)(1)-(m) are translated into L2 carrier components having a frequency of 1.227 GHz and are then transmitted.

But, since the transceivers 42(1)-(2) and 44 have imperfect clocks, carrier phase ranging biases for Carrier Phase Differential GPS position determinations are introduced by the described frequency translation. In order to avoid this problem, the omni-marker beacons 26(1)-(2) and 29(1)-(3) respectively broadcast the additional signals 36(1)-(2) and 37(1)-(3) which include a unique PRN code component and an L2 carrier component that corresponds to the local oscillator signal used to up-convert it and the other beacon marker signals 27(1)(1)-(m), 27(2)(1)-(m), 30(1)(1)-(m), 30(2)(1)-(m), and 30(3)(1)-(m). Since position receiver 32 now receives this reference signal, it can make corrective computations to eliminate the error introduced by the frequency translation.

As in the configuration of Figure 5, in the preferred embodiment, the PRN code component of each of these signals is a unique and distinct C/A code and the data component is provided as a bit stream at a frequency of 50 bits per second. However, the signals 27(1)(1)-(m), 27(2)(1)-(m), and 30(1)(1)-(m), 30(2)(1)-(m), and 30(3)(1)-(m) in this configuration need not be limited to L2 C/A GPS signals.

Referring to both Figures 5 and 6, mounted on airplane 21 is GPS mobile system 37 which includes GPS position receiver 32, GPS attitude receiver 33, GPS top side antenna 34, GPS attitude antennas 35(1)-(3), and GPS bottom side antenna 38. Each of the components 32-34, 35(1)-(3), and 38 of the GPS mobile system 37 is mobile. Furthermore, each of the antennas 34 and 35(1)-(3) receives GPS signals 25(1)-(m) and provides them to position receiver 32. Antenna 38 receives beacon marker signals 27(1)(1)-(m), 27(2)(1)-(m) 30(1)(1)-(m),

30(2)(1)-(m), and 30(3)(1)-(m) and provides them to position receiver 32.

Ordinary Code Based GPS Position Determinations

Referring back to Figure 2, when airplane 21 is outside of signal bubbles 28(1)-(2) and 31(1)-(3), position receiver 32 it makes coarse position determinations for navigational purposes using Ordinary Code Based GPS. This, is due to the fact that antenna 34 receives the GPS signals 25(1)-(m) but antenna 38 does not yet receive any of the beacon marker signals 27(1)(1)-(m), 27(2)(1)-(m), 30(1)(1)-(m), 30(2)(1)-(m), and 30(3)(1)-(m) which, as will be explained later, can be used for both Code Based and Carrier Phase Differential GPS position determinations.

As was indicated earlier, each of the GPS signals 25(1)-(m) has a unique PRN code component. The GPS satellites 24(1)-(m) each have an atomic clock and generate the PRN code components for the GPS signals 25(1)-(m) with reference to the common time base of GPS system time. Furthermore, position receiver 32 internally generates the PRN code components for the GPS signals 25(1)-(m) with reference to GPS system time as well.

The position receiver 32 compares periodically the PRN code components that it has generated internally with the corresponding PRN code components of the GPS signals 25(1)-(m) received by antenna 34. The fractional wavelength phase difference needed to match the received and generated PRN codes is then measured and computed in terms of distance and added to an integer wavelength component. Since the digital data in the data component of the GPS signals 25(1)-(m) is changes at a rate of 1.023 MHz commensurate with the frequnecy at which the PRN code is repeated, the integer wavelength component is conventional calculated based on this change in polarity. The total of the fractional wavelength component and the integer wavelength component is computed by the position receiver 32 and issued as the well known pseudo range between the receive antenna 34 and the particular GPS

satellite 24(1)-(m) which broadcast the GPS signal 25(1)-(m) which was measured. In the preferred embodiment, these range measurements are issued at a rate of between 1-10 Hz with each cycle constituting a measurement epoch.

As shown in Figure 7, the computed PRN code range measurement $R_{25(i)/34}$ at each measurement epoch for the PRN code component of GPS signal 25(i) (i.e. the ith of the GPS signals 25(1)-(m)) is an estimate (i.e. the pseudo range) of the actual unknown range $r_{24(i)/34}$ between the transmit antenna of GPS satellite 24(i) and antenna 34.

The clocks of the GPS satellites 24(1)-(m) and the position receiver 32 may vary slightly from GPS system time. This means that the PRN code components generated by the GPS satellites and the PRN code components generated internally by the position receiver 32 may be slightly out of phase with respect to GPS system time. As a result, the PRN code range measurements $R_{25(i)/34}$ for these PRN code components at each measurement epoch are not exact. Thus, at each measurement epoch, the receiver 32 has clock synchronization error ΔT_{32} and the signal generator of GPS satellite 24(i) has a clock synchronization error $\Delta T_{24(i)}$.

The relationship between $R_{25(i)/34}$ and $r_{24(i)/34}$ is provided as follows in Equation (1):

$$(1) \quad R_{25(i)/34} = r_{24(i)/34} + \Delta T_{32} - \Delta T_{24(i)}$$

where $\Delta T_{32} - \Delta T_{24(i)}$ represents the total clock synchronization error of GPS system 20.

Referring to Figure 8, in order to make proper position determinations for airplane 21 relative to the beginning of runway 23, Equation (1) must be manipulated so as to include the vector relationships c, d, and x associated with the range $r_{24(i)/34}$. For convenience and consistency, these relationships are established with respect to the runway coordinate system 46 associated with the threshold of runway 23. Coordinate system 46 is defined by the along track AT, cross track CT, and altitude A coordinates.

The position of the beginning of runway 23 with respect to the center of the Earth 48 is known and represented by the vector c [3x1] provided as follows in Equation (2):

(2)

$$c = \begin{bmatrix} c_{AT} \\ c_{CT} \\ c_A \end{bmatrix}$$

where c_{AT}, c_{CT}, and c_A are respectively the along track, cross track, and altitude distances between the beginning of runway 23 and the center of the Earth 48. The vector c is known through precision surveying techniques and is stored by the position receiver 32.

The position of top side antenna 34 with respect to the beginning of the runway 23 is unknown and represented by the vector x [3x1] provided as follows in Equation (3):

(3)

$$x = \begin{bmatrix} x_{AT} \\ x_{CT} \\ x_A \end{bmatrix}$$

where x_{AT}, x_{CT}, and x_A are respectively the along track, cross track, and altitude distances between antenna 34 and the center of the Earth 48. As will be explained shortly, the vector x is computed at each measurement epoch.

The position of the GPS satellite 24(i) with respect to the center of the Earth 48 is known and represented by the vector $d_{24(i)}$ [3x1] provided as follows in Equation (4):

(4)

$$d_{24(i)} = \begin{bmatrix} d_{24(i)/AT} \\ d_{24(i)/CT} \\ d_{24(i)/A} \end{bmatrix}$$

where $d_{24(i)/AT}$, $d_{24(i)/CT}$, and $d_{24(i)/A}$ are respectively the along track, cross track, and altitude distances between the GPS satellite 24(i) and the center of the Earth 48. The vector d is provided by the data component of the corresponding GPS signal 25(i) received by antenna 34 and provided to receiver 32.

From the preceding vector relationships, the following mathematical relationships in Equation (6) may be established:

$$(6) \quad r_{24(i)/34} = |d_{24(i)} - c - x|$$

Equation (6) can be combined with Equation (1) to establish the phase relationship provided in Equation (7):

$$(7) \quad R_{25(i)/34} = |d_{24(i)} - c - x| + \Delta T_{32} - \Delta T_{24(i)}$$

Equation (7) may then be linearized for each measurement epoch to provide the following relationship in Equation (8):

(8)

$$\Phi_{25(i)/34} = \left(\frac{(d-c-x_0)}{|d-c-x_0|}\right)\delta x + |d-c-x_0| + \Delta T_{32} - \Delta T_{24(i)}$$

where (A) x_0 is an initial guess for the precise position vector x at each measurement epoch calculated by receiver 32, and (B) δx is the vector at each measurement epoch which represents the unknown precise difference between the unknown precise vector x and the guess x_0. The initial guess vector x_0 may be the vector x computed at the previous epoch.

The relationship between the vectors x and x_0 and the vector δx is represented as follows in Equation (9):

$$\delta x = x - x_0 \quad (9)$$

Furthermore, the vector δx can be expressed as follows in Equation (10):

(10)

$$\delta X = \begin{bmatrix} \delta x_{AT} \\ \delta x_{CT} \\ \delta x_{A} \end{bmatrix}$$

where δx_{AT}, δx_{CT}, and δx_A represent respectively at each measurement epoch the unknown precise difference between the vectors x and x_0 in the along track, cross track, and altitude distances.

As was indicated earlier, at least four of the GPS satellites 24(1)-(m) are usually in view. Thus, receiver 32 makes at least four range measurements $R_{25(i)/34}$ at each measurement epoch. As a result, it can stack at each measurement epoch the at least four equations generated from Equation (8) in matrix form for solving for the vector δx and the total clock synchronization error $\Delta T_{32} - \Delta T_{41}$. The vector x is then computed using the relationship established in Equation (10).

The vector x is then iteratively computed using a least squares fit at each measurement epoch for greater precision. In other words, position receiver 32 takes vector x computed from the previous iteration and substitutes it as the initial guess x_0 in Equation (8). The unknown vector δx is again used to compute the updated vector x. this process is repeated until the vector x is computed to within a desired tolerance.

A way of adding accuracy to the computation of the vector δx at each measurement epoch is to utilize additional GPS satellites 24(i) when they are in view. Thus, the PRN code range measurements $R_{25(i)/34}$ for the additional GPS signal

25(i) are also made by receiver 32 at each measurement epoch. As a result, additional equations will be generated by receiver 32 from Equation (8) at each measurement epoch for solving the vector δx and the total clock synchronization error $\Delta T_{32} - \Delta T_{41}$. Thus, the system and method benefit from the over-determined set of unknowns.

Code Based Differential GPS Position Determinations

Referring to Figure 2, as was indicated earlier, when airplane 21 is inside one or more of the signal bubbles 31(1)-(3) but outside of signal bubbles 28(1)-(2), position receiver 32 makes accurate position determinations using Code Based Differential GPS for navigational purposes. In this situation, position receiver 32 can make these position determinations based on range measurements for the PRN code components of the received GPS signals 25(1)-(m) and the received beacon marker signals 30(1)(1)-(m), 30(2)(1)-(m), and/or 30(2)(1)-(m).

Furthermore, when airplane 21 is inside signal bubbles 28(1)-(2) and 31(1)-(3), position receiver 32 makes position determinations using Code Based Differential GPS not only for navigational purposes, but also for initializing receiver 32 to make precise position determinations using Carrier Phase Differential GPS. In this situation, position receiver 32 can make these position determinations based on range measurements for the PRN code components of the received GPS signals 25(1)-(m) and the received beacon marker signals 27(1)(1)-(m), 27(2)(1)-(m), 30(1)(1)-(m), 30(2)(1)-(m), and/or 30(3)(1)-(m).

In both situations, the Code Phase Differential position determinations can be computed in two ways without requiring the traditional digital data link that provides differential corrections or range measurements made by a reference receiver. The first method is to utilize the received beacon marker signals 27(1)(1)-(m), 27(2)(1)-(m), 30(1)(1)-(m), 30(2)(1)-(m), and/or 30(2)(1)-(m) for PRN code ranging between the bottom side antenna 38 and the omni-marker beacons 26(1)-

(2) and 29(1)-(3) and for relaying the information needed to compute Code Based Differential GPS positioned determinations. The second method is to only utilize these signals for relaying the information needed to compute Code Based Differential GPS positioned determinations. These two methods are discussed in detail later.

As was indicated earlier, each of the GPS signals 25(1)-(m) and the beacon marker signals 27(1)(1)-(m), 27(2)(1)-(m), 30(1)(1)-(m), 30(2)(1)-(m), and 30(3)(1)-(m) has a unique PRN code component. Furthermore, in addition to the internally generated PRN code components for the GPS signals 25(1)-(m), position receiver 32 also generates internally the PRN code components for the beacon marker signals 27(1)(1)-(m), 27(2)(1)-(m), 30(1)(1)-(m), 30(2)(1)-(m), and 30(3)(1)-(m) with reference to GPS system time.

The position receiver 32 compares periodically the PRN code components that it has generated internally with the corresponding PRN code components of the GPS signals 25(1)-(m) received by antenna 34 and the beacon marker signals 27(1)(1)-(m), 27(2)(1)-(m), 30(1)(1)-(m), 30(2)(1)-(m), and 30(3)(1)-(m) received by antenna 38. As was stated earlier, the fractional wavelength phase difference needed to match the received and generated PRN codes is then computed in terms of distance and added to the conventionally determined integer wavelength component to form the pseudo range measurement. As was also stated earlier, in the preferred embodiment, these range measurements are issued at rate of between 1-10 Hz with each cycle being a measurement epoch.

Referring again to Figure 7, as was indicated earlier, the PRN code components of the beacon marker signals 27(1)(1)-(m), 27(2)(1)-(m), 30(1)(1)-(m), 30(2)(1)-(m), and 30(3)(1)-(m) are phase locked to the corresponding PRN code components of the GPS signals 25(1)-(m) received by the omni-marker beacons 27(1)-(2) and 29(1)-(3).

As a result, the computed PRN code range measurement $R_{27(k)(i)/38}$ for the PRN code component of the beacon marker signal 27(k)(i) (i.e. the ith of the beacon marker signals

27(1)(1)-(m) or 27(2)(1)-(m) broadcast by the kth of the omni-marker pseduolites 26(1)-(2) and phased locked to the ith of the GPS signals 25(1)-(m)) is an estimate (i.e. the pseudo range) of the actual unknown range $r_{24(i)/26(k)}$ between GPS satellite 24(i) and the omni-marker beacon 26(k) plus the actual unknown range $r_{26(k)/38}$ between omni-marker beacon 26(k) and the antenna 38.

Similarly, the computed range measurement $R_{30(i)(j)/38}$ for the PRN code component of the beacon marker signal 30(i)(j) (i.e. the ith of the beacon marker signals 30(1)(1)-(m), 30(2)(1)-(m), or 30(3)(1)-(m) broadcast by the jth of the omni-marker pseduolites 30(1)-(3) and phased locked to the ith of the GPS signals 25(1)-(m)) is an estimate (i.e. the pseudo range) of the actual unknown range $r_{24(i)/29(j)}$ between GPS satellite 24(i) and the omni-marker beacon 29(j) plus the actual unknown range $r_{29(j)/38}$ between omni-marker beacon 29(j) and the antenna 38.

As was mentioned earlier, since the clocks of the GPS satellites 24(1)-(m) and the position receiver 32 may vary slightly from GPS system time, the position receiver 32 has clock synchronization error ΔT_{32} at each measurement epoch and the signal generator of GPS satellite 24(i) has a clock synchronization error $\Delta T_{24(i)}$ at each measurement epoch. Therefore, as was also indicated earlier, the PRN code components generated by the GPS satellites and the PRN code components generated by the position receiver 32 are slightly out of phase with respect to GPS system time. Moreover, since the PRN code components of generated by the omni-marker beacons 26(1)-(2) and 29(1)-(3) are phase locked to the PRN code components received from the GPS satellites 24(1)-(m), they are also slightly out of phase with respect to GPS system time. Thus, not only are the PRN code range measurements $R_{25(i)/34}$ at each measurement epoch not exact, so are the PRN code range measurements $R_{27(k)(i)/38}$ and $R_{30(i)(j)/38}$.

The relationship between $R_{30(i)(j)/38}$, $r_{24(i)/29(j)}$, and $r_{29(j)/38}$, and the relationship between $R_{27(k)(i)/38}$,

$r_{24(i)/26(k)}$, and $r_{26(k)/38}$ are provided as follows in Equations (11) and (12) respectively:

$$(11)\quad R_{30(i)(j)/38} = r_{24(i)/29(j)} + r_{29(j)/38} + \Delta T_{32} - \Delta T_{24(i)}$$

$$(12)\quad R_{27(k)(i)/38} = r_{24(i)/26(k)} + r_{26(k)/38} + \Delta T_{32} - \Delta T_{24(i)}$$

As was mentioned earlier, one method for computing Code Based Differential GPS position determinations utilizes the received beacon marker signals 27(1)(1)-(m), 27(2)(1)-(m), or 30(1)-(m) for PRN code ranging between the bottom side antenna 38 and the omni-marker beacons 26(1)-(2) and 29(1)-(3). In this method, Equation (1) can be difference with Equation (11) for when airplane 21 is inside one or more of the signal bubbles 31(1)-(3) shown in Figure 2 and receives the beacon marker signals 30(1)(1)-(m), 30(2)(1)-(m), and 30(3)(1)-(m). The single difference PRN code range relationship formed from this difference is provided as follows in Equation (13):

$$(13)\quad R_{25(i)/30(i)(j)} = r_{24(i)/34} - r_{24(i)/29} - r_{29/38}$$

where $R_{25(i)/30(i)(j)}$ represents the difference between the PRN code range measurement $R_{25(i)/34}$ for the ith of the GPS signals 25(1)-(m) and the corresponding PRN code range measurement $R_{30(i)(j)/38}$ for the ith of the beacon marker signals 30(1)(1)-(m), 30(2)(1)-(m), and 30(3)(1)-(m) phase locked to the corresponding i^{th} of the GPS signals 25(1)-(m) and broadcast by the kth of the reference omni-markers 29(1)-(3). It is important to note that differencing Equations (1) and (12) removes the total clock synchronization error $\Delta T_{32} - \Delta T_{24(i)}$ from Equation (14).

Furthermore, in this method, Equation (1) can be difference with Equation (12) for when airplane 21 is inside of signal bubbles 28(1)-(2) as shown in Figure 3 and receives

the beacon marker signals 27(1)(1)-(m) and 27(2)(1)-(m). The single difference PRN code range relationship formed from this difference is provided as follows in Equation (14):

$$(14)\quad R_{25(i)/27(k)(i)} = r_{24(i)/34} - r_{24(i)/26(k)} - r_{26(k)/38}$$

where $R_{25(i)/27(k)(i)}$ represents the difference between the PRN code phase measurement $R_{25(i)/34}$ for the ith of the GPS signals 25(1)-(m) and the corresponding PRN code phase measurement $R_{27(k)(i)/38}$ for the ith of the beacon marker signals 27(1)(1)-(m) and 27(2)(1)-(m) that is broadcast by the kth of the omni-marker beacons 26(1)-(2) and is phase locked to the corresponding i^{th} of the GPS signals 25(1)-(m). Similar to Equation (13), by differencing Equations (1) and (12) the total clock synchronization error $\Delta T_{32} - \Delta T_{24(i)}$ has been removed from Equation (14).

Turning to Figure 8 again, in order to make proper Code Based Differential GPS position determinations for airplane 21 relative to the threshold (i.e. beginning) of runway 23, Equations (13) and (14) must be manipulated so as to include the vector relationships x, y, $\hat{s}_{24(i)/26(k)}$, $\hat{s}_{24(i)/29(j)}$, $p_{26(k)}$, $p_{29(j)}$, and $A^T k_{38}$ associated with the ranges $r_{24(i)/34}$, $r_{24(i)/29(j)}$, $r_{29(j)/38}$, $r_{24(i)/26(k)}$, and $r_{26(k)/38}$. Once again, these relationships are established with respect to the runway coordinate system 46 associated with the threshold of runway 23.

As was the case with the discussion regarding Ordinary Code Based GPS position determinations, the position of top side antenna 34 with respect to the runway 23 threshold is unknown and represented by the vector x as represented in Equation (3).

The position of bottom side antenna 38 with respect to the runway 23 threshold is also unknown and represented by

the vector y [3x1] provided as follows in Equation (15):

(15)

$$y = \begin{bmatrix} y_{AT} \\ y_{CT} \\ y_A \end{bmatrix}$$

where y_{AT}, y_{CT}, and y_A are respectively the along track, cross track, and altitude distances between antenna 38 and the runway 23 threshold.

The position of omni-marker beacons 29(j) and 26(k) relative to the beginning of runway 23 are known and represented by the position vectors $p_{29(j)}$ [3x1] and $p_{26(k)}$ [3x1] provided as follows in Equations (16) and (17) respectively:

(16)

$$p_{29(j)} = \begin{bmatrix} p_{29(j)/AT} \\ p_{29(j)/CT} \\ p_{29(j)/A} \end{bmatrix}$$

(17)

$$p_{26(k)} = \begin{bmatrix} p_{26(k)/AT} \\ p_{26(k)/CT} \\ p_{26(k)/A} \end{bmatrix}$$

where $p_{29(j)/AT}$, $p_{29(j)/CT}$, and $p_{29(j)/A}$ are respectively the along track, cross track, and altitude distances between omni-marker beacon 29(j) and the beginning of runway 23 and $p_{26(k)/AT}$, $p_{26(k)/CT}$, and $p_{26(k)/A}$ are respectively the along track, cross track, and altitude distances between omni-marker beacon 26(k) and the beginning of runway 23. These vectors are known through precision surveying techniques and are either stored by the position receiver 32 or provided to

position receiver 32 in the data components of the beacon marker signals 30(1)(1)-(m), 30(2)(1)-(m), 30(3)(1)-(m), 27(1)(1)-(m), and 27(2)(1)-(m).

The known directions to GPS satellite 24(i) relative to omni-marker beacons 29 and 26(k) are represented by the unit direction vectors $\hat{s}_{24(i)/29(j)}$ [3x1] and $\hat{s}_{24(i)/26(k)}$ [3x1] provided as follows in Equations (18) and (19) respectively:

(18)

$$\hat{s}_{24(i)/29(j)} = \begin{bmatrix} \hat{s}_{24(i)/29(j)/AT} \\ \hat{s}_{24(i)/29(j)/CT} \\ \hat{s}_{24(i)/29(j)/A} \end{bmatrix}$$

(19)

$$\hat{s}_{24(i)/26(k)} = \begin{bmatrix} \hat{s}_{24(i)/26(k)/AT} \\ \hat{s}_{24(i)/26(k)/CT} \\ \hat{s}_{24(i)/26(k)/A} \end{bmatrix}$$

where $s_{24(i)/29(j)/AT}$, $s_{24(i)/29(j)/CT}$, $s_{24(i)/29(j)/A}$ are respectively the unit along track, cross track, and altitude distances to GPS satellite 24(i) with respect to omni-marker beacon 29(j) and $s_{24(i)/26(k)/AT}$, $s_{24(i)/26(k)/CT}$, $s_{24(i)/26(k)/A}$ are respectively the unit along track, cross track, and altitude distances to GPS satellite 24(i) with respect to omni-marker beacon 26(k). These vectors are computed by receiver 32 for each GPS satellite 24(i) from the satellite position information contained in the data component of its associated GPS signal 25(i) and from the known positions of omni-marker beacons 26(1)-(2) and 29(1)-(3).

The vector $A^T k_{38}$ [3x1] is the lever arm correction vector needed for determining the unknown position vector x. It is the dot product of the transposed attitude matrix A [3x3] and the known position vector k_{38} [3x1] for the bottom side antenna 38.

The known position of bottom side antenna 38 relative to top side antenna 34 is precisely surveyed with respect to the body coordinate system 47 defined by the coordinates X, Y, and Z and shown in Figure 9. This position is represented by vector k_{38} which is provided as follows in Equation (20):

(20)

$$k_{38} = \begin{bmatrix} k_{38/AT} \\ k_{38/CT} \\ k_{38/A} \end{bmatrix}$$

where $k_{38/X}$, $k_{38/Y}$ and $k_{38/Z}$ are respectively the distances between antennas 34 and 38 in the X, Y, and Z directions.

Referring to Figures 5 and 6, in the preferred embodiment, the attitude matrix A can be generated by position receiver 32 or can be supplied by GPS attitude receiver 33 to position receiver 32. The generation of the attitude matrix A will be discussed later in detail.

The attitude matrix A is known and can be determined from attitude solutions generated by attitude receiver 33. As shown in Figure 10, the attitude matrix A is established from the rotation of the body coordinate system 47 of airplane 21 with respect to the runway coordinate system 46. This matrix is provided as follows in Equation (21):

(21)

$$A^T = \begin{bmatrix} A_{X/AT} & A_{Y/AT} & A_{Z/AT} \\ A_{X/CT} & A_{Y/CT} & A_{Z/CT} \\ A_{X/A} & A_{Y/A} & A_{Z/A} \end{bmatrix}$$

where each element of the matrix represents the rotation of a coordinate of the body coordinate system 47 with respect to a coordinate of the runway coordinate system 46. As a result, the vector $A^T k_{38}$ represents the position of antenna 38 relative to antenna 34 in the runway coordinate system 46.

From the preceding vector relationships, the following mathematical relationships in Equations (22)-(25) may be established:

$$(22)\quad r_{24(i)/34} - r_{24(i)/29(j)} = -\hat{s}^{T}_{24(i)/29(j)}(x - p_{29(j)})$$

$$(23)\quad r_{29(j)/38} = |x - p_{29(j)} + A^{T}k_{38}|$$

$$(24)\quad r_{24(i)/34} - r_{24(i)/26(k)} = -\hat{s}^{T}_{24(i)/26(k)}(x - p_{26(k)})$$

$$(25)\quad r_{26(k)/38} = |x - p_{26(k)} + A^{T}k_{38}|$$

$$(26)\quad y = x + A^{T}k_{38}$$

Equations (22) and (23) can be combined with Equation (13) to establish the single difference range relationship provided in Equation (27):

$$(27)\quad R_{25(i)/30(i)(j)} = -\hat{s}^{T}_{24(i)/29(j)}(x - p_{29(j)}) - |x - p_{29(j)} + A^{T}k_{38}|$$

Equations (24) and (25) can be combined with Equation (14) to establish the single difference range relationship provided in Equation (28):

$$(28)\quad R_{25(i)/27(k)(i)} = -\hat{s}^{T}_{24(i)/26(k)}(x - p_{26(k)}) - |x - p_{26(k)} + A^{T}k_{38}|$$

Equations (27) and (28) may then be linearized so as to provide for each measurement epoch the following relationships in Equations (29) and (30):

(29)

$$\Phi_{25(i)/30(i)(j)} = \left(-\hat{s}^{T}_{24(i)/29(j)}\right)\delta x - \hat{s}_{24(i)/29(j)}(x_0 - p_{29(j)}) - |x - p_{29(j)} + A^{T}k_{38}|$$

(30)

$$\Phi_{25(i)/27(k)(i)} = \left(-\hat{s}^{T}_{24(i)/26(k)}\right)\delta x - \hat{s}_{24(i)/26(k)}\left(x_0 - p_{26(k)}\right) - \left|x - p_{26(k)} + A^{T}k_{38}\right|$$

where (A) $|x - p_{29(j)} + A^{T}k_{38}|$ and $|x - p_{26(k)} + A^{T}k_{38}|$ are unknown magnitudes, (B) x_0 is the guess for the precise position vector x at each measurement epoch calculated by receiver 32 using Code Based GPS, and (C) δx is the unknown vector at each measurement epoch which represents the unknown precise difference between the unknown precise vector x and the guess x_0.

Alternatively, Equations (27) and (28) can be linearized as follows in Equations (31) and (32):

(31)

$$\Phi_{25(i)/30(j)(i)} = \left(-\hat{s}^{T}_{24(i)/29(j)} - \frac{\left(x_0 - p_{29(j)} + A^{T}k_{38}\right)}{\left|x_0 - p_{29(j)} + A^{T}k_{38}\right|}\right)\delta x - \hat{s}_{24(i)/29(j)}\left(x_0 - p_{29(j)}\right) - \left|x - p_{29(j)} + A^{T}k_{38}\right|$$

(32)

$$\Phi_{25(i)/27(k)(i)} = \left(-\hat{s}^{T}_{24(i)/26(k)} - \frac{\left(x_0 - p_{26(k)} + A^{T}k_{38}\right)}{\left|x_0 - p_{26(k)} + A^{T}k_{38}\right|}\right)\delta x - \hat{s}_{24(i)/26(k)}\left(x_0 - p_{26(k)}\right) - \left|x - p_{26(k)} + A^{T}k_{38}\right|$$

where (A) x_0 is the guess for the precise position vector x at each measurement epoch calculated by receiver 32 using Code Based GPS, and (B) δx is the unknown vector at each measurement epoch which represents the unknown precise difference between the unknown precise vector x and the guess x_0.

As with Ordinary Code Based GPS position determinations, the relationship of the vectors δx, x, and x_0 is represented in Equation (10). Also, the initial guess vector x_0 may be

the vector x computed using Equation (8) to generate Ordinary Code Based GPS position determinations.

Referring to Figure 2, when airplane 21 is inside one or more of the signal bubbles 31(1)-(3) but outside of signal bubbles 28(1)-(2), receiver 32 makes PRN code range measurements $R_{25(i)/34}$ at each measurement epoch for the GPS signals 25(1)-(m) and PRN code phase measurements $R_{30(i)(j)/38}$ for the beacon marker signals 30(1)(1)-(m), 30(2)(1)-(m), and 30(3)(1)-(m). As a result, it can stack at each measurement epoch at least four equations generated from Equation (29) in matrix form for solving for the three unknowns (δx_{AT}, δx_{CT}, and δx_A) of the vector δx and the unknown magnitude $|x - p_{29(j)} + A^T k_{38}|$.

The vector x is then computed using the relationship established in Equation (10). As an integrity check, the magnitude $|x - p_{29(j)} + A^T k_{38}|$ using the computed vector X can be computed and checked against the magnitude that was solved for.

For greater precision, the vector x and the magnitude $|x - p_{29(j)} + A^T k_{38}|$ are iteratively computed at each measurement epoch using the same kind of least squares fit method as was described earlier. This is done until the vector x is computed to within a desired tolerance at each measurement epoch.

Moreover, in the configuration of Figure 2, since four of the GPS satellites 24(1)-(m) are usually in view, there will almost always be more than four equations generated from Equation (29) at each measurement epoch for solving for the three unknowns (i.e. δx_{AT}, δx_{CT}, and δx_A) of the vector δx and the unknown magnitude $|x - p_{29(j)} + A^T k_{38}|$. Thus, the system and method benefit from the overdetermined set of unknowns. However, even if lock on multiple GPS signals 25(1)-(m) is lost by the position receiver 32 or the omni-marker beacons 29(1)-(3), Equation (31) rather than (29) can be used for generating at least three equations for solving for the vector δx. Thus, although the magnitude $|x - p_{29(j)} + A^T k_{38}|$ cannot be independently solved in order to conduct integrity

checks, the vector δx nevertheless can be solved in this situation. Since it is likely that in mountainous areas the position receiver 32 or the omni-marker beacons 29(1)-(3) lose lock on one or more of the GPS signals 25(1)-(m), the configuration of Figure 2 is particularly suited for this possibility.

Also, since four of the GPS satellites 24(1)-(m) are in most situations in view, even in the configurations of Figures 3 and 4, four equations can be generated from Equation (29) at each measurement epoch for solving for the vector δx and the magnitude $|x - p_{29(j)} + A^T k_{38}|$ to compute the vector X in the way described earlier. But, even if lock on one of the GPS signals 25(1)-(m) is lost by the position receiver 32 or the omni-marker beacon 29(1), three equations can still be generated from Equation (31) at each measurement epoch for solving for the vector δx in order to compute the vector x.

Also, referring to Figures 2-4, when airplane 21 enters signal bubbles 28(1)-(2), PRN code range measurements $R_{27(i)(k)/38}$ for the beacon marker signals 27(1)(1)-(m) and 27(1)(1)-(m) can be made for aiding in initializing position receiver 32 to make precise Carrier Phase Differential GPS position determinations. As a result, the position receiver 32 can stack additional equations generated at each measurement epoch from Equations (30) or (32) in matrix form for solving for the vector δx and the magnitudes $|x - p_{29(j)} + A^T k_{38}|$ and $|x - p_{26(k)} + A^T k_{38}|$. The vector x is then computed in the way described earlier. It is also checked at each iteration by using it to compute both the magnitudes $|x - p_{29(j)} + A^T k_{38}|$ and $|x - p_{26(k)} + A^T k_{38}|$ for comparison with the solved for magnitudes if Equations (29) and (30) are employed.

Accuracy can also be increased by utilizing additional GPS satellites 24(i) when they are in view in any of the configurations of Figures 2-4. Thus, the PRN code range measurements $R_{25(i)/34}$, $R_{30(i)(j)/38}$, and $R_{27(i)(k)/38}$ associated with the additional GPS signal 25(i) are made by receiver 32 at each measurement epoch. As a result, additional equations

will be generated by receiver 32 from Equations (29)-(31) at each measurement epoch for solving the vector δx. Thus, the system and method again benefit from the over-determined set of unknowns.

Figure 11 shows a way in which the kth omni-marker beacons 26(k) or the jth omni-marker beacon 29(j) can be used for wide area Code Based Differential GPS. In this case, rather than transmitting the beacon marker signals 27(k)(1)-(m) or 30(j)(1)-(m) together in the form of a low power signal bubble, these signals are transmitted together as a directional high power signal beam 27(k)(1)-(m) or 30(j)(1)-(m) to a geosynchronous satellite transponder 49.

Similar to the omni-marker 26(k) or 29(j), the geosynchronous satellite transponder 49 is a repeater that re-broadcasts the incoming signals beacon marker signals 27(k)(1)-(m) or 30(j)(1)-(m) including the carrier component and the PRN code component of each of these signals in the direction of the Earth. Thus, each of the re-transmitted beacon marker signals 27(k)(1)-(m) or 30(j)(1)-(m) includes a carrier component that is phase locked to the carrier component of a corresponding received beacon marker signal 27(k)(1)-(m) or 30(j)(1)-(m) and includes a PRN code component that is the same and is phase locked to the PRN code component of that same received beacon marker signal 27(k)(1)-(m) or 30(j)(1)-(m). Thus, the out-going (i.e. retransmitted) carrier and PRN code components of each of the beacon marker signals 27(k)(1)-(m) or 30(j)(1)-(m) is exactly phase coherent with respect to their incoming counterparts in the received beacon marker signals 27(k)(1)-(m) or 30(j)(1)-(m).

As shown in Figure 11, the antenna 34 of the airplane 21 then receives these signals. They are then provided to the position receiver 32 which computes the vector x from Equations (29), (30), (31), or (32) in the same way as was described earlier. Moreover, although Figure 11 shows only one omni-marker beacons 26(k) or 29(j) and only one geosynchronous satellite 49, one skilled in the art will appreciate that multiple omni-marker beacons 26(k) and/or

29(j) may be employed in a similar fashion to that shown in Figure 2. Also, one skilled in the art will appreciate that multiple geosynchronous satellites 49 can be similarly employed.

Referring again to Figure 2, in the second method suggested earlier for computing Code Based Differential GPS positions, the omni-markers 26(1)-(2) and 29(1)-(3) only relay the information necessary to make differential corrections. In other words, no PRN code ranging occurs between the bottom side antenna 38 and the omni-markers 26(1)-(2) and 29(1)-(3).

In this method, receiver 32 computes the position of one or more of the omni-marker beacons 26(1)-(2) or 29(1)-(3) (depending on the configuration) with respect to the center of the Earth 48 and compares it with the actual known location to generate differential corrections. Referring to Figure 8, the position of omni-marker beacons 29(j) and 26(k) relative to the center of the Earth 48 are known and represented by the position vectors $e_{29(j)}$ [3x1] and $e_{26(k)}$ [3x1] provided as follows in Equations (33) and (34) respectively:

(33)

$$e_{29}(j) = \begin{bmatrix} e_{29(j)/AT} \\ e_{29(j)/CT} \\ e_{29(j)/A} \end{bmatrix}$$

(34)

$$e_{26}(k) = \begin{bmatrix} e_{26(k)/AT} \\ e_{26(k)/CT} \\ e_{26(k)/A} \end{bmatrix}$$

where $e_{29(j)/AT}$, $e_{29(j)/CT}$, and $e_{29(j)/A}$ are respectively the along track, cross track, and altitude distances between omni-marker beacon 29(j) and the center of the Earth 48 and $e_{26(k)/AT}$, $e_{26(k)/CT}$, and $e_{26(k)/A}$ are respectively the along track, cross track, and altitude distances between omni-marker

beacon 26(k) and the center of the Earth 48. These vectors are known through precision surveying techniques and are either stored by the position receiver 32 or provided to position receiver 32 in the data components of the beacon marker signals 30(1)(1)-(m), 30(2)(1)-(m), 30(3)(1)-(m), 27(1)(1)-(m), and 27(2)(1)-(m).

From the preceding vector relationships, the following relationships in Equations (35) and (36) may be established with respect to the center of the Earth 48 as follows:

$$(35)\quad r_{24(i)/29(j)} = d_{24(i)} - e_{29(j)}$$

$$(36)\quad r_{24(i)/26(k)} = d_{24(i)} - e_{26(k)}$$

Equations (35) and (23) can be combined with Equation (11) and Equations (36) and (25) can be combined with Equation (12) to form the following relationship in Equations (37) and (38) respectively:

$$(37)\quad R_{30(i)(j)/38} = d_{24(i)} - e_{29(j)} + |x - p_{29(j)} + A^T k_{38}| + \Delta T_{32} - \Delta T_{24(i)}$$

$$(38)\quad R_{27(k)(i)/38} = d_{24(i)} - e_{26(k)} + |x - p_{26(k)} + A^T k_{38}| + \Delta T_{32} - \Delta T_{24(i)}$$

Equations (37) and (38) can then be linearized to form the following relationships in Equations (39) and (40):

(39)

$$\Phi_{30(j)(i)/38} = d - e_{29(j)} + \frac{(x_0 - p_{29(j)} + A^T k_{38})}{|x_0 - p_{29(j)} + A^T k_{38}|}\,\delta x + |x_0 - p_{29(j)} + A^T k_{38}| + \Delta T_{32} - \Delta T_{24(i)}$$

(40)

$$\Phi_{27(k)(i)/38} = d - e_{26(k)} + \frac{(x_0 - p_{26(k)} + A^T k_{38})}{|x_0 - p_{26(k)} + A^T k_{38}|}\,\delta x + |x_0 - p_{26(k)} + A^T k_{38}| + \Delta T_{32} - \Delta T_{24(i)}$$

where (A) x_0 is the guess for the precise position vector x at each measurement epoch calculated by receiver 32 using Code Based GPS, and (B) δx is the unknown vector at each measurement epoch which represents the unknown precise difference between the unknown precise vector x and the guess x_0.

Referring to Figure 2, when airplane 21 is inside one or more of the signal bubbles 31(1)-(3) but outside of signal bubbles 28(1)-(2), receiver 32 makes PRN code range measurements $R_{25(i)/34}$ at each measurement epoch for the GPS signals 25(1)-(m) and PRN code range measurements $R_{30(i)(j)/38}$ for the beacon marker signals 30(1)(1)-(m), 30(2)(1)-(m), and 30(3)(1)-(m). As a result, it can stack at each measurement epoch at least four equations generated from Equation (37) in matrix form for solving for the three unknowns (i.e. $e_{29(j)/AT}$, $e_{29(j)/CT}$, and $d_{29(j)/A}$) of the vector $e_{29(j)}$ and the bias term $|x - P_{29(j)} + A^T k_{38}| + \Delta T_{32} - \Delta T_{24(i)}$.

This vector is then compared at each measurement epoch with the actual values for the position vector $e_{29(j)}$ stored by the receiver 32 or provided by the beacon marker signals 30(1)(1)-(m), 30(2)(1)-(m), and 30(3)(1)-(m) in their data components. In response, the position receiver 32 computes differential corrections which are either applied to the PRN code range measurements $R_{30(i)(j)/38}$ at each measurement epoch or to the vector x computed at each epoch in the manner described next.

Based on the corrected PRN range measurements $R_{30(i)(j)/38}$ at each measurement epoch, at least four equations generated from Equation (39) at each measurement epoch can be stacked in matrix form for solving the three unknowns (i.e. δx_{AT}, δx_{CT}, and δx_A) of vector δx and the clock bias term $\Delta T_{32} - \Delta T_{24(i)}$. The vector x is then computed using the relationship

established in Equation (10). Alternatively, as was just suggested, the differential corrections may be applied instead after the vector x has been computed.

Moreover, in the configuration of Figure 2, since four of the GPS satellites 24(1)-(m) are usually in view, there will almost always be more than four equations generated from Equation (37) at each measurement epoch for first solving for the vector $e_{29(j)}$ and the bias term $|x - P_{29(j)} + A^T k_{38}| + \Delta T_{32} - \Delta T_{24(i)}$ to compute the differential corrections to the PRN code range measurements $R_{30(i)(j)/38}$. And, for the same reason, there will almost always be more than four equations generated from Equation (39) at each measurement epoch for solving for the vector δx and clock bias term $\Delta T_{32} - \Delta T_{24(i)}$. Thus, the system and method benefit from the overdetermined set of unknowns.

Also, since four of the GPS satellites 24(1)-(m) are in most situations in view, even in the configurations of Figures 3 and 4, four equations can be generated from Equation (37) at each measurement epoch for first solving for the vector $e_{29(j)}$ and the bias term $|x - p_{29(j)} + A^T k_{38}| + \Delta T_{32} - \Delta T_{24(i)}$ and four equations can be generated from Equation (39) at each measurement epoch for solving for the vector δx and clock bias term $\Delta T_{32} - \Delta T_{24(i)}$ in the way described earlier.

Also, referring to Figures 2-4, when airplane 21 enters signal bubbles 28(1)-(2), PRN code range measurements $R_{27(i)(k)/38}$ for the beacon marker signals 27(1)(1)-(m) and 27(1)(1)-(m) can be made for aiding in initializing position receiver 32 to make precise Carrier Phase Differential GPS position determinations. As a result, the position receiver 32 can stack additional equations generated at each measurement epoch from Equation (38) for first solving for the vector $e_{26(k)}$ and the bias term $|x - p_{26(k)} + A^T k_{38}| + \Delta T_{32} - \Delta T_{24(i)}$ to compute differential corrections to the PRN code range measurements $R_{27(i)(k)/38}$ at each epoch. For the same reason, four additional equations can be generated from Equation (40) at each measurement epoch for solving for the vector δx and clock bias term $\Delta T_{32} - \Delta T_{24(i)}$).

Accuracy can also be increased by utilizing additional GPS satellites 24(i) when they are in view in any of the configurations of Figures 2-4. Thus, the PRN code range measurements $R_{25(i)/34}$, $R_{30(i)(j)/38}$, $R_{27(i)(k)/38}$ associated with the additional GPS signal 25(i) are made by receiver 32 at each measurement epoch. As a result, additional equations will be generated by receiver 32 from Equations (29) or (31) at each measurement epoch for solving the vector δx. Thus, the system and method again benefit from the over-determined set of unknowns.

Furthermore, the wide area Code Based Differential GPS configuration of Figure 11 can also be used with the kth omni-marker beacon 26(k) or the jth omni-marker beacon 29(j). Since the receiver 32 of airplane 21 receives the beacon marker signals 27(k)(1)-(m) or 30(j)(1)-(m) from the geosynchronous satellite transponder 49, it can compute the vector x in the same way as just described.

Carrier Phase Differential GPS Position Determinations

Referring to Figure 2, when airplane 21 is inside of the signal bubbles 28(1)-(2), GPS position receiver 32 computes Code Phase differential GPS position determinations for proper navigation during the initialization period for Carrier Phase Differential GPS position determinations.

The initialization of position receiver 32 involves integer ambiguity resolution. In general, integer ambiguity resolution is the process of determining, at a particular point in time, the number of integer wavelengths of the carrier component of a signal (GPS or pseudolite) traveled between a given pair of antennas in the direction of the GPS satellite or pseudolite that broadcasted the GPS signal. However, in the context of the present invention, the integer ambiguity resolution can also be thought of as involving the determination of the difference in the number of integer wavelengths traveled to one or more antennas between the carrier components of a GPS signal and the corresponding

carrier component of the beacon marker signal or between the corresponding carrier components of two beacon marker signals generated by different omni-marker beacons.

Figure 12 provides an illustration of how the later discussed integer ambiguities $n_{25(i)/27(k)(i)}$ and $n_{25(i)/30(j)(i)}$. This figure shows the situation for the first measurement epoch of the initialization period. The integer ambiguities $n_{25(i)/27(k)(i)}$ are associated with the GPS signals 25(i) received by top side antenna 34 and the beacon marker signals 27(k)(i) received by bottom side antenna 38. The integer ambiguities $n_{25(i)/30(j)(i)}$ are associated with the GPS signals 25(i) received by top side antenna 34 and the beacon marker signals 29(j)(i) received by bottom side antenna 38.

The receiver 32 is configured to make phase measurements for the acquired signals 25(1)-(m), 27(1)(1)-(m), 27(2)(1)-(m), 30(1)(1)-(m), 30(2)(1)-(m), and 30(3)(1)-(m). Each measurement includes both a fractional wavelength phase component Φ_{fr} and an integer wavelength phase change component Φ_{int}. The integer wavelength change in phase Φ_{int} for each raw phase measurement is kept track of by receiver 32 as of the time each of the signals 25(1)-(m), 27(1)(1)-(m), 27(2)(1)-(m), 30(1)(1)-(m), 30(2)(1)-(m), and 30(3)(1)-(m) was first acquired. Thus, each phase measurement is in a sense a partial range measurement. In the preferred embodiment, like the PRN code range measurements, the carrier phase measurements are issued by the receiver 32 at a rate in the range of 1-10 Hz with each cycle being a measurement epoch.

As mentioned previously, position receiver 32 generates internally its own carrier components for phase comparisons with the received carrier component of the signals 25(1)-(m), 27(1)(1)-(m), 27(2)(1)-(m), 30(1)(1)-(m), 30(2)(1)-(m), and 30(3)(1)-(m). These carrier components are not generated precisely with reference to GPS system time because at each measurement epoch the receiver 32 has the earlier described clock synchronization error ΔT_{32}. Furthermore, the GPS satellite 24(i) has a clock synchronization error $\Delta T_{24(i)}$ and

therefore does not generate the carrier components of GPS signals 25(1)-(m) precisely with reference to GPS system time as well.

As shown in Figure 12, the unknown range $r_{24(i)/34}$ between the GPS satellite 24(i) and antenna 34, at the initial epoch of the initialization, includes the carrier phase component $\Phi_{25(i)/34}$ measured by receiver 32 and the unknown integer component $n_{25(i)/34}$ of GPS signal 25(i). The unknown range $r_{24(i)/29(j)} + r_{29(j)/38}$ from the GPS satellite 24(i) to the omni-marker beacon 29(j) and then to the antenna 38, at the initial epoch of the initialization, includes the carrier phase component $\Phi_{30(j)(i)/38}$ measured by receiver 32 and the unknown integer component $n_{30(j)(i)/38}$ of the beacon marker signal 30(j)(i). And, the unknown range $r_{24(i)/26(k)} + r_{26(k)/38}$ from the GPS satellite 24(i) to the omni-marker beacon 26(k) and then to the antenna 38, at the initial epoch of the initialization, includes the carrier phase component $\Phi_{27(k)(i)/38}$ measured by receiver 32 and the unknown integer component $n_{27(k)(i)/38}$ of the beacon marker signal 30(j)(i).

The unknown integer components $n_{25(i)/34}$, $n_{30(j)(i)/38}$, and $n_{27(k)(i)/38}$ are assigned at the initial epoch remain constant throughout the initialization process and the subsequent Carrier Phase Differential GPS position determinations. This fact is better illustrated by Figure 13.

Figure 13 shows an epoch after the initial epoch. This second epoch could be during or after the initialization period. Each of the carrier phase measurements $\Phi_{25(i)/34}$, $\Phi_{29(j)(i)/38}$, and $\Phi_{27(k)(i)/38}$ will have changed since the initial epoch. This is due to the fact that the fractional component Φ_{fr} and integer wavelength change component Φ_{int} which make up the identified phase measurements have changed since the initial epoch. However, the assigned integer components $n_{25(i)/34}$, $n_{30(j)(i)/38}$, and $n_{27(k)(i)/38}$ have not changed.

The relationship between $\Phi_{25(i)/34}$ and $n_{25(i)/34}$, the relationship between $\Phi_{29(j)(i)/38}$ and $n_{30(j)(i)/38}$, and the

relationship between $\Phi_{27(k)(i)/38}$ and $n_{27(k)(i)/38}$ are provided as follows in Equations (41), (42), and (43) respectively:

$$(41)\quad \Phi_{25(i)/34} = r_{24(i)/34} - n_{25(i)/34} + \Delta T_{32} - \Delta T_{24(i)}$$

$$(42)\quad \Phi_{30(i)(j)/38} = r_{24(i)/29(j)} + r_{29(j)/38} - n_{30(j)(i)/38} + \Delta T_{32} - \Delta T_{24(i)}$$

$$(43)\quad \Phi_{27(k)(i)/38} = r_{24(i)/26(k)} + r_{26(k)/38} - n_{27(k)(i)/38} + \Delta T_{32} - \Delta T_{24(i)}$$

Equations (41) and (42) can be difference and Equations (41) and (43) can be difference so as to form the single difference phase relationship provided as follows in Equations (44) and (45) respectively:

$$(44)\quad \Phi_{25(i)/30(j)(i)} = r_{24(i)/34} - r_{24(i)/29(j)} - r_{29(j)/38} - n_{25(i)/30(j)(i)}$$

$$(45)\quad \Phi_{25(i)/27(k)(i)} = r_{24(i)/34} - r_{24(i)/27(k)} - r_{27(k)/38} - n_{25(i)/27(k)(i)}$$

where (A) $n_{25(i)/30(j)(i)}$ is the integer ambiguity associated with the GPS signal 25(i) and the corresponding beacon marker signal 30(j)(i) and is the difference between the unknown assigned integer component $n_{25(i)/34}$ and the unknown assigned integer component $n_{30(j)(i)/38}$, and (B) $n_{25(i)/27(k)(i)}$ is the integer ambiguity associated with the GPS signal 25(i) and the corresponding beacon marker signal 27(k)(i) and is the difference between the unknown assigned integer component $n_{25(i)/34}$ and the unknown assigned integer component $n_{30(j)(i)/38}$.

Like in the discussion regarding Code Based Differential GPS, it is important to note that in Equations (44) and (45) the total clock synchronization error $\Delta T_{32} - \Delta T_{24(i)}$ has been removed by differencing Equations (41)-(43) in the way just discussed.

Turning to Figure 8 again, in order to make proper Carrier Phase Differential GPS position determinations for airplane 21 relative to the threshold (i.e. beginning) of runway 23, Equations (44) and (45) must be manipulated so as to include the vector relationships x, y, $\hat{s}_{24(i)/26(k)}$, $\hat{s}_{24(i)/29(j)}$, $p_{26(k)}$, $p_{29(j)}$, and $A^T k_{38}$ associated with the ranges $r_{24(i)/34}$, $r_{24(i)/29(j)}$, $r_{29(j)/38}$, $r_{24(i)/26(k)}$, and $r_{26(k)/38}$. Once again, these relationships are established with respect to the runway coordinate system 46 associated with the threshold of runway 23 and are shown in the earlier described Equations (22)-(26).

Equations (22) and (23) can be combined with Equation (44) to establish the single difference phase relationship provided in Equation (46):

(46) $\Phi_{25(i)/30(j)(i)} = -\hat{s}^T_{24(i)/29(j)}(x - p_{29(j)}) - |x - p_{29(j)} + A^T k_{38}| + n_{25(i)/30(j)(i)}$

Equations (24) and (25) can be combined with Equation (45) to establish the single difference phase relationship provided in Equation (47):

(47) $\Phi_{25(i)/27(k)(i)} = -\hat{s}^T_{24(i)/26(k)}(x - p_{26(k)}) - |x - p_{26(k)} + A^T k_{38}| + n_{25(i)/27(k)(i)}$

Equations (46) and (47) may then be linearized so as to provide for each measurement epoch the following relationships in Equations (48) and (49):

(48)

$$\Phi_{25(i)/30(j)(i)} = \left(-\hat{s}^T_{24(i)/29(j)} - \frac{(x_0 - p_{29(j)} + A^T k_{38})}{|x_0 - p_{29(j)} + A^T k_{38}|} \right) \delta x - \hat{s}_{24(i)/29(j)}(x_0 - p_{29(j)}) - |x - p_{29(j)} + A^T k_{38}| + n_{25(i)/30(j)(i)}$$

(49)

$$\Phi_{25(i)/27(k)(i)} = \left(-\hat{S}^{T}_{24(i)/26(k)} - \frac{(x_0 - p_{26(k)} + A^T k_{38})}{|x_0 - p_{26(k)} + A^T k_{38}|} \right) \delta x$$

$$- \hat{s}_{24(i)/26(k)} (x_0 - p_{26(k)}) - |x - p_{26(k)} + A^T k_{38}| + n_{25(i)/27(k)(i)}$$

where (A) x_0 is the guess for the precise position vector x at each measurement epoch calculated by receiver 32 using Code Based GPS, and (B) δx is the unknown vector at each measurement epoch which represents the unknown precise difference between the unknown precise vector x and the guess x_0.

As with Code Based GPS position determinations, the relationship of the vectors δx, x, and x_0 is represented in Equation (10). Also, the initial guess vector x_0 may be the vector x computed using Equations (29), (30), (31), and/or (32) to generate Code Based Differential GPS position determinations.

Resolving the integer ambiguities $n_{25(i)/27(k)(i)}$ and $n_{25(i)/30(j)(i)}$ involves making carrier phase measurements $\Phi_{25(i)/34}$, $\Phi_{27(k)(i)/38}$, and $\Phi_{29(j)(i)/38}$ for the signals 25(1)-(m), 27(1)(1)-(m), 27(2)(1)-(m), 30(1)(1)-(m), 30(2)(1)-(m), and 30(3)(1)-(m). Referring to Figure 2, in this method, position receiver 32 will make phase measurements $\Phi_{25(i)/34}$, $\Phi_{27(k)(i)/38}$, and $\Phi_{29(j)(i)/38}$ over a number of epochs while airplane 21 is inside the signal bubbles 28(1)-(2) and receives the beacon marker initialization signals 27(1)(1)-(m) and 27(2)(1)-(m). During this initialization period, there is a large angular change in geometry between antennas 34 and 38 and the initialization omni-markers 26(1)-(2) as the antennas 34 and 38 move through the signal bubbles 28(1)-(2).

Receiver 32 makes and records the carrier phase measurements $\Phi_{25(i)/34}$, $\Phi_{27(k)(i)/38}$, and $\Phi_{29(j)(i)/38}$ for the signals 25(1)-(m), 27(1)(1)-(m), 27(2)(1)-(m), 30(1)(1)-(m), 30(2)(1)-(m), and 30(3)(1)-(m) at a number of epochs during this large angular change in geometry. After this has been done, position receiver 32 can stack in matrix form all of the equations generated at each recorded epoch from the

Equations (48) and (49) can simultaneously solve for (a) the integer ambiguities $n_{25(i)/27(k)(i)}$ and $n_{25(i)/30(j)(i)}$, and (b) the unknown vectors δx at each recorded epoch.

For greater accuracy, the integer ambiguities $n_{25(i)/27(k)(i)}$ and $n_{25(i)/30(j)(i)}$ are iteratively computed to within a desired tolerance. This is done using the least squares method described earlier where the vector x computed at each iteration using the relationship established in Equation (10) is used as the initial guess x_0 for the next iteration.

Moreover, in the configurations of Figures 2 and 3, since four of the GPS satellites 24(1)-(m) are usually in view, there will almost always be more equations generated from Equations (48) and (49) than there are unknowns (i.e. the integer ambiguities $n_{25(i)/27(k)(i)}$ and $n_{25(i)/30(j)(i)}$ and the vectors δx at each recorded epoch). Thus, the system and method benefit from the overdetermined set of unknowns. However, even if lock on multiple GPS signals 25(1)-(m) is lost by the position receiver 32 or the omni-marker beacons 26(1)-(2), Equations (48) and (49) can still be used for generating enough equations over a number of recorded epochs while airplane 21 is in the signal bubbles 28(1)-(2) for solving for the integer ambiguities $n_{25(i)/27(k)(i)}$ and $n_{25(i)/30(j)(i)}$.

Furthermore, as was stated earlier, four of the GPS satellites 24(1)-(m) are in most situations in view. Thus, even in the configuration of Figure 4, enough equations can be generated from Equations (48) and (49) for solving for the integer ambiguities $n_{25(i)/27(k)(i)}$ and $n_{25(i)/30(j)(i)}$ and the vectors δx at each recorded epoch in the way described earlier.

Furthermore, for each of the configurations in Figures 2-4, accuracy can also be increased by utilizing additional GPS satellites 24(i) when they are in view. Thus, the carrier phase measurements $\Phi_{25(i)/34}$, $\Phi_{27(k)(i)/38}$, and $\Phi_{29(j)(i)/38}$ associated with the additional GPS signal 25(i) are made by receiver 32 at each measurement epoch. As a result, additional

equations will be generated by receiver 32 from Equations (48) and (49) at each recorded epoch for solving for the integer ambiguities $n_{25(i)/27(k)(i)}$ and $n_{25(i)/30(j)(i)}$ in the way described earlier.

For each of the configurations in Figures 2-4, greater accuracy can also be achieved if receiver 32 is programmed to record the phase measurements $\Phi_{25(i)/34}$, $\Phi_{27(k)(i)/38}$, and $\Phi_{29(j)(i)/38}$ at more than the minimum number of epochs needed to compute the integer ambiguities $n_{25(i)/27(k)(i)}$ and $n_{25(i)/30(j)(i)}$. As a result, there will be more equations generated from the Equations (48) and (49) then there are unknowns. Thus, the system and method will benefit again because the set of unknowns will be over-determined.

Receiver 32 can make precise position determinations using Carrier Phase Differential GPS only after the integer ambiguities $n_{25(i)/27(k)(i)}$ and $n_{25(i)/30(j)(i)}$ have been computed. Thus, these are the initialization values generated by receiver 32 during the initialization process.

The fact that the integer ambiguities $n_{25(i)/27(k)(i)}$ and $n_{25(i)/30(j)(i)}$ are integer values serves as a built-in integrity checking device for the method just described. Thus, receiver 32 can check to see during the initialization process that these computed integer ambiguities converge to integer values.

Once the integer ambiguities $n_{25(i)/27(k)(i)}$ and $n_{25(i)/30(j)(i)}$ have been computed, the initialization period is over and the receiver 32 can compute at each measurement epoch the precise position vector x. This is done by substituting the integer ambiguities $n_{25(i)/27(k)(i)}$ into Equation (47) while the airplane 21 is still in the signal bubbles 28(1)-(2). Since airplane 21 will eventually have left the signal bubbles 28(1)-(2) in Figures 2 and 4 and signal bubble 28(1) in Figure 3, Equation (47) is then no longer usable for computing the vector x.

Referring to Figure 2, at each measurement epoch while airplane 21 is in one or more of the signal bubbles 31(1)-(3), position receiver 32 makes the phase measurements $\Phi_{25(i)/34}$

and $\Phi_{29(j)(i)/38}$. Thus, receiver 32 can stack at each measurement epoch the equations generated from Equation (46) in matrix form for solving for the vector x and the magnitude $|x - p_{29(j)} + A^T k_{38}|$. As with the Code Based Differential GPS position determinations discussed earlier, the magnitude $|x - p_{29(j)} + A^T k_{38}|$ using the computed vector X can be computed and checked against the magnitude that was solved for in order to provide an additional integrity check.

Moreover, in the configuration of Figure 2, since four of the GPS satellites 24(1)-(m) are usually in view, there will almost always be more than four equations generated from Equation (46) for solving for the three unknowns (i.e. x_{AT}, x_{CT}, and x_A) of the vector x and the unknown magnitude $|x - p_{29(j)} + A^T k_{38}|$. Thus, the system and method benefit from the overdetermined set of unknowns.

Furthermore, even if lock on multiple GPS signals 25(1)-(m) is lost by the position receiver 32 or the omni-marker beacons 29(1)-(3), Equation (48) rather than (46) can be used for generating at least three equations for solving for the vector δx. Thus, although the magnitude $|x - p_{29(j)} + A^T k_{38}|$ cannot be independently solved in order to conduct integrity checks, the vector δx nevertheless can be solved in this situation and the vector X iteratively computed using the relationship in Equation (10) and the least squares fit method described earlier. As was indicated earlier for the discussion regrading Code Based Differential GPS position determinations, the position receiver 32 or the omni-marker beacons 29(1)-(3) may lose lock on one or more GPS signals 25(1)-(m) in mountainous areas. Thus, the configuration of Figure 2 is particularly suited for this possibility.

Moreover, since four of the GPS satellites 24(1)-(m) in most situations in view, even in the configurations of Figures 3 and 4, four equations can be generated from Equation (44) for solving for the vector δx and the magnitude $|x - p_{29(j)} + A^T k_{38}|$ to compute the vector X in the way described earlier. But, even if lock on one of the GPS signals 25(1)-(m) is lost by the position receiver 32 or the omni-marker beacon 29(1),

three equations can still be generated from Equation (48) for solving for the vector δx in order to compute the vector x.

Accuracy can also be increased by utilizing additional GPS satellites 24(i) when they are in view in any of the configurations of Figures 2-4. Thus, the carrier phase measurements $\Phi_{25(i)/34}$ and $\Phi_{30(i)(j)/38}$ associated with the additional GPS signal 25(i) are made by receiver 32 at each measurement epoch. As a result, additional equations will be generated by receiver 32 from Equations (46) or (48) at each measurement epoch for solving the vector x or the vector δx. Thus, the system and method again benefit from the over-determined set of unknowns.

Once the precise position vector x is computed, the position (i.e. vector y) of the bottom antenna 38 or any other part of the airplane 21 can easily be computed. The vector y can easily be computed from the relationship established in Equation (26). Additionally, it is particularly critical for the position of the landing gear of the airplane 21 to be known during a landing. Thus, using a similar equation to that of Equation (26), the precise position of the landing gear can also be computed if its location relative to top side antenna 34 in the runway coordinate system 46 is precisely surveyed beforehand.

Still another built-in integrity check is the use of Code Based Differential GPS position determinations by receiver 32. The system and method do not require PRN code ranging except for generating the coarse initial position vector x_0 at each measurement epoch of the initialization period. Thus, the coarse position determinations made by receiver 32 can be used after the initialization period to monitor the Carrier Phase Differential GPS position determinations made by receiver 32.

Referring again to Figure 4, airplane 21 moves through the signal bubble 28(1) in a simple linear trajectory 22 over the single initialization omni-marker beacon 26(1) during the initialization period. As indicated previously, the system and method utilizes the large angular change in geometry

between airplane 21 and the beacon antenna 43(1) of beacon 26 in order to resolve the integer ambiguities $n_{25(i)/27(k)(i)}$ and $n_{25(i)/30(j)(i)}$. Considered with respect to the slowly changing GPS satellite geometry, this large angular change in geometry will make the along track component δx_{AT} and altitude component δx_A of precise position change vector δx clearly observable during the initialization period. Thus, the resolved integer ambiguities $n_{25(i)/27(k)(i)}$ and $n_{25(i)/30(j)(i)}$ will provide subsequent position determinations where the along track component x_{AT} and the altitude component x_A of precise position vector x are accurate to within centimeters.

However, in most cases the flight trajectory 22 during initialization will be in a line closely over the single initialization beacon 26(1) with little or no cross track (i.e. lateral) deviation. Under these circumstances, as is evident from the linearized Equations (48) and (49), the cross track component δx_{CT} of precise position change vector δx will be unobservable during initialization. Thus, the resolved integer ambiguities $n_{25(i)/27(k)(i)}$ and $n_{25(i)/30(j)(i)}$ will result in subsequent position determinations where the cross track component x_{CT} of precise position vector x will only be accurate to within meters. This accuracy is commensurate with the accuracy of the initial guess x_0 for the vector x calculated by receiver 32 at each measurement epoch of the initialization.

One way in which the cross track error can be reduced to within centimeters is to employ the configuration of Figures 2 or 3 which utilizes two initialization omni-marker beacons 26(1)-(2). As shown in Figure 14, the two initialization beacons 26(1)-(2) are placed on each side of the along track component of the flight trajectory 22. Because there are now multiple carrier ranging link signals 27(1)(1)-(m) and 27(2)(1)-(m) in the cross track plane, the cross track component δx_{CT} of precise position change vector δx will be clearly observable during initialization. As a result, the cross track uncertainty of the single beacon configuration

is eliminated and the resolved integer ambiguities $n_{25(i)/27(k)(i)}$ and $n_{25(i)/30(j)(i)}$ will then provide subsequent position determinations having a cross track component x_{CT} accurate to within centimeters.

Another way of reducing the cross track error to within centimeters is to overfly the single initialization beacon 26(1) twice. As shown in Figure 15, the first overflight is made in the along track AT direction and the second in the cross track CT direction.

With the first overflight, a first set of integer ambiguities $n_{25(i)/27(k)(i)}$ and $n_{25(i)/30(j)(i)}$ are resolved during a first initialization period. As was discussed for the single initialization beacon configuration, after initialization, position receiver 32 provides Carrier Phase Differential GPS position determinations with a cross track error of several meters.

During the second overflight, the coarse initial position vector x_0 is calculated by position receiver 32 using Carrier Phase Differential GPS position determinations. Since the overflight is in the cross track direction (rather than in the along track direction), the cross track component δx_{CT} and the altitude component δx_{CT} of the precise position change vector δx will be clearly observable. But, the along track component δx_{AT} will not be observable during this second overflight. However, the along track component $x_{0/AT}$ of the initial position vector x_0 calculated for the second overflight is already within centimeter level due to the earlier overflight. Therefore, the second set of integer ambiguities $n_{25(i)/27(k)(i)}$ and $n_{25(i)/30(j)(i)}$ resolved during the second overflight will provide subsequent position determinations with the cross track component x_{CT}, the along track component x_{AT}, and the altitude component x_A all accurate to within centimeters.

Another significant advantage to Carrier Phase Differential GPS position determinations is that the integer ambiguities $n_{25(i)/30(j)(i)}$ associated with additional GPS signals 25(i) broadcast by GPS satellites 24(i) which were

not in view during the initialization period can now be resolved easily once they do become in view after the initialization period. Receiver 32 accomplishes this by measuring the carrier phase $\Phi_{25(i)/34}$ for any new GPS signal 25(i) and measuring the carrier phase $\Phi_{30(i)(j)/38}$ for the corresponding new beacon marker signal 30(j)(i) at a particular epoch after the initialization period. At this epoch, the precise position vector x is already being determined by receiver 32 from the phase measurements $\Phi_{25(i)/34}$ and $\Phi_{30(i)(j)/38}$ of the GPS signal 25(i) and the beacon marker signal 30(j)(i) for which the integer ambiguities $n_{25(i)/30(j)(i)}$ have already been resolved during the initialization period described earlier.

The calculated position vector x and the phase measurements $\Phi_{25(i)/34}$ and $\Phi_{30(i)(j)/38}$ associate with the new GPS signal 25(i) and the corresponding new beacon marker signal 30(j)(i) are substituted into Equation (46) so as to solve for the new integer ambiguity $n_{25(i)/30(j)(i)}$. Then, a new equation is generated from Equation (46) at each measurement epoch for use in solving for the position vector x. Thus, this technique results in a seamless integer hand-off so that a new initialization period is unnecessary.

DETAILED DESCRIPTION OF GROUND SYSTEM

Figures 2-4 as well as Figures 5 and 6 show the various configurations for the reference ground system 39. As shown in these figures, the reference system 39 can comprise one or more of the reference omni-marker beacons 29(1)-(3) and one or more of the initialization omni-markers 26(1)-(2).

Figure 2 shows the preferred configuration where three reference omni-marker beacons 29(1)-(3) are used. As was indicated earlier, the three reference omni-markers 29(1)-(3) are at known locations. These omni-marker beacons are strategically placed so that the broadcast radii of the signal bubbles 31(1)-(3) overlap and so that each of the signal bubbles 28(1)-(2) is within each of the signal bubbles 31(1)-

(3). In the preferred embodiment, the omni-markers 29(1)-(3) are placed at approximately 300 meters from the runway 23 threshold on around the airport vicinity with one of the omni-marker beacons being located on the top of the control tower of the airport. However, in mountainous areas they may be strategically placed so as to direct the signals 30(1)(1)-(m), 30(2)(1)-(m), and 30(3)(1)-(m) in the direction of the airport. And, the power used to generate the signal bubbles 31(1)-(3) is selected to be approximately 100 μW.

In the configurations of Figures 3 and 4, a single reference omni-marker is used. It is placed at known location so that the signal bubbles 28(1)-(2) in Figure 3 and the lone signal bubble 28(1) in Figure 4 are within the broadcast radius of the signal bubble 31(1). In the preferred embodiment, like in the configuration of Figure 2, the power level selected for generating the signal bubble 31(1) is approximately 100 μW. Moreover, the omni-marker 29(1) is placed at approximately 300 meters on top of the control tower of the airport.

The preferred configuration shown in Figure 2 and 5 and the configuration shown in Figure 3 employ the dual initialization omni-marker configuration discussed earlier. As was suggested, in these configurations, the initialization omni-marker beacons 26(1)-(2) are placed on each side of the estimated flight trajectory in the along track direction. In the preferred embodiment, these antennas are located on each side of the along track axis approximately 100 meters apart in the cross track direction and are approximately 1000 meters in front of the runway 23 threshold in the along track direction.

Furthermore, the power level for the signal bubbles 28(1)-(2) is selected so that the broadcast radii of the two signal bubbles 28(1)-(2) will overlap at a height which is larger than the nominal altitude (i.e. the normal altitude) for an estimated flight trajectory along the along track axis and between the omni-marker beacons 26(1)-(2). In the preferred embodiment, the nominal altitude for a flight

trajectory inside the signal bubbles 28(1)-(2) will be approximately several hundred meters. As a result, the power used will be on the order of several μW so that signal bubbles 28(1)-(2) have broadcast radii which overlap at a height greater than the preferred nominal altitude of several hundred meters.

Each of these omni-markers 26(1)-(2) and 29(1)-(3) are basically configured the same. A top level block diagram of the preferred configuration for each of the omni-markers 26(1)-(2) and 29(1)-(3) is shown in Figure 16.

As shown in this figure, each of the receive antennas 41(k) or 40(j) (i.e. the receive antenna for the kth of the omni-marker beacons 26(1)-(3) or the receive antenna for the jth of the omni-marker beacons 29(1)-(3) shown in Figures 2-4, 5, and 6) receives the GPS signals 25(1)-(m). The receive antenna 41(k) or 40(j) then provides the detected GPS signals 25(1)-(m) to the reference GPS transceiver 42(k) or 44(j) (i.e. the receive antenna for the kth of the omni-marker beacons 26(1)-(3) or the receive antenna for the jth of the omni-marker beacons 29(1)-(3) shown in Figures 2-4, 5, and 6).

The reference transceiver 42(k) or 44(j) includes a signal receiving stage 53, a multi-channel signal processing stage 51, a reference oscillator 55, a synthesizer 56, a computer 57, and a signal transmitting stage 52.

As shown in Figure 16, bandpass filter 60 of the signal receiving stage 53 is coupled to the receive antenna 41(k) or 40(j) for receiving the GPS signals 25(1)-(m). The bandpass filter 60 extracts the GPS signals 25(1)-(m) and provides them to the image rejection harmonic mixer 61. The mixer 61 down converts each of the GPS signals 25(1)-(m) to an intermediate frequency of approximately 4 MHz. The down converted GPS signals 25(1)-(m) are then filtered by the bandpass filter 63 to suppress all spurious signals. The signal is then converted to a digital signal by an analog to digital (A/D) converter 64. This may simply be a hard limiter which amplifies the GPS signals 25(1)-(m) to the point of

saturation. Thus, the signal receiving stage extracts the received GPS signals 25(1)-(m) and prepares them for signal processing by the signal processing stage 51.

The signal processing stage 51 includes m signal processing channels 54(1)-(m) for processing m GPS signals including GPS signals 25(1)-(m). Each channel 54(i) is configured similarly and is coupled to the A/D converter 64 for receiving the m down converted GPS signals 25(1)-(m).

Figure 17 shows a detailed block diagram of the ith of the channels 54(1)-(m). The channel 54(i) includes a receive PRN code generator 65 which generates a punctual version of the PRN code component of the received GPS signal 25(i) which is provided to the multiplier 66. The receive PRN code generator 65 for each channel 54(i) of the signal processing stage 51 produces a different assigned GPS PRN code component than any of the other receive PRN code generators 65. As will be evident shortly, this is so that each channel 54(i) can lock onto a different GPS signal 25(1)-(m).

As shown, the multiplier can be an exclusive-or gate. The multiplier 66 multiplies the punctual version of the PRN code of GPS signal (i) with the down converted GPS signals 25(1)-(m) received from the A/D converter 64 to reconstruct the carrier component of the GPS signal (i).

The reconstructed carrier component (i.e. the output of the multiplier 66) is provided to the Q accumulator 67. The Q accumulator 67 is typically an up/down counter. It also receives from the carrier numerically controlled oscillator (NCO) 68 a Q clock signal. The Q accumulator compares the Q clock signal and the reconstructed carrier component and in response measures the tracking error and outputs a carrier tracking error signal provided to the computer 57.

The computer 57 includes a central processing unit (CPU) 58 and a memory 59. The memory 59 stores a signal processing routine 160 for controlling the operations of the m signal processing channels 54(1)-(m). In response to the carrier tracking error signal, the signal processing routine 160 generates control signals which are provided by the CPU 58

to the carrier NCO 68 for steering the Q clock signal (i.e. speeding up or slowing down the Q clock signal depending on the polarity and size of the error) so that the tracking error signal indicates no tracking error. When this occurs, the Q clock signal is exactly in phase with the reconstructed carrier component and the Q clock signal is phase locked to the carrier component of the GPS signal 25(i).

Furthermore, the reconstructed carrier component (i.e. the output of the multiplier 66) is also provided to the I accumulator 69. Like the Q accumulator, the I accumulator 69 is typically an up/down counter. The I accumulator 69 receives from the carrier NCO 68 an I clock signal which is 90° out of phase (i.e. in quadrature) with the Q clock signal. The I accumulator compares the I clock signal and the reconstructed carrier component and in response measures the signal strength. The output signal is provided to the CPU 58 as the 50 bits per second data component of the GPS signal (i) which was modulated onto its carrier component.

Moreover, the mixer 71 receives the incoming downconverted GPS signals 25(1)-(m) from the A/D converter 64. It also receives from PRN code generator 65 the difference between an early version and a late version of the PRN code component (i.e. an early minus late PRN code signal) of the GPS signal 25(i). The mixer 71 mixes the early minus late PRN code signal with the incoming GPS signals 25(1)-(m) to produce a mixer output signal.

The early minus late (E/L) accumulator 70 receives the mixer output signal samples (mixes) it with the I clock signal from the carrier NCO 68 to strip out the carrier component. Thus, the output of the E/L accumulator 70 is the PRN code tracking error signal and is proportional to the tracking error for the PRN code component of GPS signal 25(i).

In response to the PRN code tracking error signal, the signal processing routine 160 generates control signals which are provided by the CPU 58 to the PRN code numerically controlled oscillator (NCO) 72 for steering the tracking error to zero. In response to these signals, the PRN code NCO 72

steers the clock signal it produces so that the punctual version of the PRN code produced by the PRN code receive generator 65 is exactly in phase with the PRN code component of the GPS signal 25(i). When this occurs, the PRN code tracking error signal will indicate no tracking error and the punctual version of the PRN code component of GPS signal 25(i) is phase locked to the actual PRN code component of this signal.

Thus, the receive code generator 65, the multiplier 66, the Q accumulator 67, the computer 57, the PRN code NCO 72, and the carrier NCO 68 together form a phased lock loop for phase locking onto the carrier component and the PRN component of the GPS signal (i). This form of a phase locked loop is well known in the art and is commonly found in the signal processing channels of commercially available GPS receivers such as the Trimble 4000 Series GPS receiver.

However, unlike these conventional receivers, each of the m channels 54(1)-(m) of transceiver 42(k) or 44(j) include a transmit PRN code generator 73 and a second multiplier 74. The transmit code generator 73 is configured the same as the conventional receive PRN code generator 72 except that it generates a unique unassigned PRN code component. Furthermore, the multiplier 74 is configured the same as the conventional multiplier 66.

The transmit PRN code generator 72 receives the clock signal produced by the PRN code NCO 72. In response, it produces a unique unassigned GPS PRN code component. As was stated earlier, the clock signal produced by the PRN code NCO 72 results in the phase locked punctual version of the receive PRN code component of the GPS signal 25(i) produced by the receive PRN code generator 65. Since the transmit PRN code generator 73 receives this clock signal as well, the unique unassigned transmit PRN code component it produces is also in phase with the PRN code component of the received GPS signal 25(i).

This phase locked PRN code component is then provided to the multiplier 74(a). The multiplier 74(a) also receives

the Q clock signal which is phase locked to the reconstructed carrier component of the GPS signal 25(i). The multiplier 74(a) multiplies these signals together and the product is then multiplied by the multiplier 74(b) with a 50 bit per second data stream from the computer 57. As suggested earlier, this data stream can contain important runway and airport status information as well as the position vector $p_{26(k)}$ or $p_{29(j)}$ for the omni-marker 26(k) or 29(j) which is all stored in the data memory 162 of the computer 57. Thus the output of the multiplier one of the beacon marker signals 27(k)(1)-(m) or 30(j)(1)-(m) (i.e. the ith of the beacon marker signals 27(1)(1)-(m) and 27(2)(1)-(m) generated by the kth of the omni-markers 26(1)-(2) and phase locked to the ith GPS signal 25(1)-(m) or the jth of the beacon marker signals 30(1)(1)-(m), 30(2)(1)-(m), and 30(3)(1)-(m) generated by the jth of the omni-markers 26(1)-(2) and phase locked to the ith GPS signal 25(1)-(m)).

Referring again to Figure 16, the summer 75 of the signal transmitting stage 52 of transceiver 42(k) or 44(j) receives the phase locked signals 27(k)(1)-(m) or 30(j)(1)-(m) from the m channels 54(1)-(m) of the signal processing stage 51. In response, it sums together these signals and provides them to the attenuater 76.

For the omni-markers 26(1)-(2), the attenuater 76 reduces the strength of the received signal so that the summed signals 27(k)(1)-(m) are provided to the bandpass filter 77 at a power level of 1 μW. However, for the omni-markers 29(1)-(3), the attenuater 76 reduces the strength of the received signal so that the summed signals 30(j)(1)-(m) are provided to the bandpass filter 77 at a power level of 100 μW.

These summed signals 27(k)(1)-(m) or 30(j)(1)-(m) are then filtered by the bandpass filter 77 to get rid of any spurious signals and to round out the summed signals 27(k)(1)-(m) or 30(j)(1)-(m) so that they are in sinusoidal form. Alternatively, a digital synthesizer and a digital to analog (D/A) converter can be placed prior to the attenuater 76 to

convert the summed signals 27(k)(1)-(m) or 30(j)(1)-(m) to analog form.

The summed signals are then provided to the intermediate frequency harmonic mixer 78. The mixer 78 up-converts the summed signals 27(k)(1)-(m) or 30(j)(1)-(m) to the L1 carrier frequency of 1.575 GHz. These signals are filtered again so as to remove spurious signals by the bandpass filter 79. Thus, the signal trnasmitting stage prepares the generated beacon marker signals 27(k)(1)-(m) or 30(j)(1)-(m) for transmission.

The signals 27(k)(1)-(m) or 30(j)(1)-(m) are then transmitted by the transmit antenna 43(k) or 45(j) (i.e. the transmit antenna for the kth of the omni-marker beacons 26(1)-(3) or the transmit antenna for the jth of the omni-marker beacons 29(1)-(3) shown in Figures 2-4, 5, and 6).

It is important here to note that the same local oscillator signal is provided by the reference oscillator 55 for down-conversion and up-conversion by the mixers 61 and 78 respectively. This ensures that the outgoing transmitted signals 27(k)(1)-(m) or 30(j)(1)-(m) are phase coherent (i.e. in phase) with the incoming GPS signals 25(1)-(m).

Figures 6, 18, and 19 present an alternative configuration for the omni-marker 26(k) or 30(j). In this configuration, the omni-marker 26(k) or 30(j) includes only a single collocated receive and transmit antenna 43(k) or 45(j). The receive and transmit antenna 43(k) or 45(j) provides the received signals 25(1)-(4) to the conventional configured diplexer 62. The diplexer 62 routes the incoming L1 GPS signals 25(1)-(m) from the receive and transmit antenna 43(k) or 45(j) and simultaneously routes the outgoing L2 beacon marker signals 27(k)(1)-(m) or 30(j)(1)-(m) to the receive and transmit antenna 43(k) or 45(j) for transmission.

The diplexer 62 then sends only the L1 C/A GPS signals 25(1)-(4) to the signal receive stage 53 which is configured in the same way as the signal receive stage 53 in Figure 16 and performs the same signal extraction and down conversion operations. Furthermore, the signal processing stage 51 includes the same m channels 54(1)-(m) for generating the

phase locked signals 27(k)(1)-(m) or 30(j)(1)-(m). However, the signal processing stage 51 of this configuration also includes an additional channel 54(m+1) which will be explained shortly.

The signal transmitting stage 52 is configured in the same way as the signal transmitting stage 52 of Figure 16 except that the up-conversion mixer 78 receives a local oscillator signal which is different from the local oscillator signal received by the down-conversion mixer 61. Based on this signal, the mixer 61 up converts the summed signals 27(k)(1)-(m) or 30(j)(1)-(m) to a frequency, such as the L2 frequency 1.227 GHz, which is different than the L1 frequnecy 1.575 GHz. This is done in order to provide the frequency isolation necessary for the diplexer 62 to distinguish between the outgoing transmitted signals 27(k)(1)-(m) or 30(j)(1)-(m) and the incoming GPS signals 25(1)-(m).

But, since the reference oscillator 55 is not a perfect clock, carrier phase ranging biases for Carrier Phase Differential GPS position determinations are introduced by the described frequency translation. In order to avoid this problem, the additional channel 54(m+1) is included in the signal processing stage 51. As shown in Figure 19, an intermediate frequency signal from the synthesizer 56, having the earlier described intermediate frequency, is provided to the multiplier 74(a) of this channel. And, the transmit PRN code generator 73 of this channel generates the unique PRN code component simply based on a clock signal provided by the synthesizer 56.

The multiplier 74(a) then multiplies these two signals together to produce the additional signals 36(k) or 37(j) (i.e. the kth of the additional signals 36(1)-(2) described earlier or the jth of the additional signals 37(1)-(3) described earlier and shown in Figure 6). Thus, this signal is simply a PRN coded L2 pilot carrier signal after it is summed, attenuated, filtered, up-converted and transmitted together with the other signals 27(k)(1)-(m) or 30(j)(1)-(m) produced by the signal processing stage 51. Referring to

Figure 6, since this signal serves as a relay for providing the receiver 32 with the local oscillator signal used to up-convert the signals 27(k)(1)-(m) or 30(j)(1)-(m), position receiver 32 can make corrective computations to eliminate the error introduced by the frequency translation.

In either of the configurations described, the PRN code component generated by the transmit PRN code generator 73 is unique so as to avoid confusion among other users of GPS. Therefore, the unique PRN code component generated by the transmit PRN code generator is (a) different from any of the PRN code components of any GPS signal 25(i) received, (b) different from any other PRN code component generated by the m channels 54(1)-(m), and (c) different than any other PRN code component produced by another omni-marker beacon 26(k) or 29(j) used in the same ground system 39.

The PRN code component generated by the transmit PRN code generator 73 may be different from the received PRN code component of the GPS signals 25(1)-(m) in several ways. It may simply include the same sequence of random binary pulses as the PRN code component of the corresponding GPS signal 25(1)-(m) to which it is phase locked. But, this sequence of pulses will be out of phase with the sequence of pulses of the PRN code component of the corresponding GPS signal 25(1)-(m) by a predefined and significant amount so as to avoid confusion. In other words, the twp PRN code components are phase locked and have the same sequence of pulses, but these pulses occur at substantially different times in GPS system time. Alternatively, it may simply be a completely different and arbitrary sequence.

However, as is evident from the foregoing discussion, each of the PRN code components of the beacon marker signals 27(1)(1)-(m), 27(2)(1)-(m), 30(1)(1)-(m), 30(2)(1)-(m), and 30(3)(1)-(m) corresponds to one of the PRN code components of the GPS signals 25(1)-(m). As a result, the position receiver 32 can make the earlier described Code Based Differential GPS and Carrier Phase Differential GPS position determinations by recognizing the predefined and previously

unassigned PRN code components that correspond to the already assigned PRN code components of the GPS signals 25(1)-(m).

DETAILED DESCRIPTION OF THE MOBILE SYSTEM

Figures 20-22 provide detailed illustrations of the GPS mobile system 37 which makes up part of the entire GPS system 20. The functions of the components of the mobile system 37, in relation to the previously described equations, are better understood with reference to these figures.

Figures 5 and 6 show one embodiment of mobile system 37. In this embodiment, mobile system 37 includes GPS position receiver 32, GPS attitude receiver 33, antennas 34, 35(1)-(3), and 38.

Figure 20 provides a more detailed illustration of part of the configuration of Figures 5 and 6. This figure shows the relationship between antennas 34 and 38 and GPS receiver 32.

The antenna 34 receives GPS signals 25(1)-(m). As was indicated earlier, its position with respect to the runway 23 threshold is given by the vector x.

The antenna 38 can receive the GPS signals 25(1)-(m) and the beacon marker signals 27(1)(1)-(m), 27(2)(1)-(m), 30(1)(1)-(m), 30(2)(1)-(m), and 30(3)(1)-(m). Furthermore, if the transceiver 42(k) or 44(k) outputs these beacon marker signals at the L2 frequency, then the signals 36(1)-(2) and 37(1)-(3) may also be received by the antenna 38. As was also indicated earlier, its position with respect to the runway 23 threshold is given by the vector y.

GPS position receiver 32 receives the signals 25(1)-(m), 27(1)(1)-(m), 27(2)(1)-(m), 30(1)(1)-(m), 30(2)(1)-(m), 30(3)(1)-(m), 36(1)-(2), and 37(1)-(3) from the antennas 34 and 38. Similar to the transceivers 42(1)-(2) and 44(1)-(2), it includes a signal receiving block 80, a signal processing block 81, a reference oscillator 85, a synthesizer 86, and a computer 87.

In this configuration, the signal receiving block 80 comprises two signal receiving stages 83(1)-(2). The signal receiving stage 83(1) is coupled to antenna 34 for receiving the GPS signals 25(1)-(m). The signal receiving stage 83(2) is coupled to antenna 38 for receiving the beacon marker signals 27(1)(1)-(m), 27(2)(1)-(m), 30(1)(1)-(m), 30(2)(1)-(m), 30(3)(1)-(m), 36(1)-(2), and 37(1)-(3). The signal receiving stages 83(1)-(2) are configured and coupled in the same way and perform the same signal extracting and down converting functions for each of these signals as does the signal receiving stage 53 transceiver 42(k) or 44(j) shown in Figure 16 and described earlier. However, if the beacon marker signals are at the L2 frequency, then the signal receiving stage 83(2) down converts the beacon marker signals from the L2 frequency to the intermediate frequnecy.

The signal processing block 81 includes two multi-channel signal processing stages 84(1)-(2). The signal processing stages 84(1)-(2) are respectively coupled to the signal receiving stages 83(1)-(2). The signal processing stages 84(1)-(2) are configured similar to, perform the same signal separating and phase locking functions as, and generate the same type of phase tracking information (i.e. error tracking signals) as does the signal processing stage 53 of transceiver 42(k) or 44(j) described earlier. The only difference is that the channels of the signal processing stages 84(1)-(2) do not include circuitry for outputting a phase locked version of the incoming signal. Furthermore, in order to perform the phase locking operation described earlier, each channel of the signal provessing stage generates the PRN code of one of the signals 27(1)(1)-(m), 27(2)(1)-(m), 30(1)(1)-(m), 30(2)(1)-(m), 30(3)(1)-(m), 36(1)-(2), and 37(1)-(3).

The computer 87 is coupled to each of the signal processing stages 84(1)-(2). It includes a central processing unit (CPU) 88 and a computer memory 89.

Similar to what was described earlier for transceiver 42(k) or 44(j), the CPU 88 receives from the signal processing stages 84(1)-(2) the information (i.e. carrier and PRN code

tracking error signals) necessary for making the carrier phase measurements $\Phi_{25(i)/34}$, $\Phi_{27(k)(i)/38}$, and $\Phi_{30(j)(i)/38}$ and the PRN code range measurements $R_{25(i)/34}$, $R_{30(i)(j)/38}$, and $R_{27(i)(k)/38}$ for each received GPS signal 25(1)-(m), 27(1)(1)-(m), 27(2)(1)-(m), 30(1)(1)-(m), 30(2)(1)-(m), and 30(3)(1)-(m). Furthermore, the CPU 88 also receives from the signal processing block 81 the demodulated data components of these signals.

The computer memory 89 stores the signal processing routine 190, the carrier phase measuring routine 191, the PRN code range measuring routine 192, the coarse position generating routine 194, the accurate position generating routine 195, the GPS satellite unit directional vector computation routine 196, the initialization routine 197, the precise position generating routine 199, and the precise position integer hand-off routine 200. Data generated by the routines 190, 191, 194, and 195-200 are stored in the data storage area 201 of the computer memory 89. The CPU 88 is coupled to the computer memory 89 for receiving the routines 190-200 and the data in the data storage area 201.

The signal processing routine 190 generates the signal processing control signals for controlling the carrier and PRN code phase locking operations of the signal processing block 81. These control signals are outputted by the CPU 88 and received by the signal processing block 81 in the same manner as was described earlier for the transceiver 42(k) or 44(j) for omni-marker beacon 26(k) or 29(j) in Figure 16.

The carrier phase measuring routine 191 makes the phase measurements $\Phi_{25(i)/34}$, $\Phi_{30(j)(i)/38}$, and $\Phi_{27(k)(i)/38}$ based on the information (carrier tracking error signal) received from the signal processing block 81. It also makes the phase measuremnts $\Phi_{30(j)(i)/38}$ and $\Phi_{27(k)(i)/38}$ in the same way if the signals 37(1)-(3) or 36(1)-(2) are received. Thus, the routine 191 and the signal processing block 81 make up the carrier phase measuring component of the receiver 32. As was indicated earlier, each of these carrier phase measurement includes both a fractional wavelength phase component Φ_{fr} and

an integer wavelength phase change component Φ_{int}. These phase measurements are used by receiver 32 for making Carrier Phase Differential GPS position determinations.

The PRN code range measuring routine 192 makes the PRN code range measurements $R_{25(i)/34}$, $R_{30(j)(i)/38}$, and $R_{27(i)(k)/38}$ described earlier based on the information (i.e. PRN code tracking error signals) received from the signal processing block 81. Thus, the routine 192 and the signal processing block 81 make up the PRN code phase measuring component of the receiver 32. As was indicated earlier, these measurements are used by receiver 32 for Conventional GPS and Code Based Differential GPS position determinations.

As was stated earlier, in the preferred embodiment, the routines 191 and 192 issue their respective measurements at the rate of 1-10 Hz.

The coarse position generating routine 194 is called up by CPU 88 for coarse navigation when airplane 21 is out of view of the omni-marker beacons 26(1)-(2) and 29(1)-(3). The routine 194 computes position determinations (i.e. vector x) to within tens of meters of the exact location. This is done with Ordinary Code Based GPS using Equations (8) and (1) in the iiterative process discussed earlier. Thus, routine 194 computes vector x based on (A) the range measurements $R_{25(i)/34}$ computed at each epoch by the code range measuring routine 192, (B) the known position (i.e. vector c) of the beginning of the runway 23 stored by the data storage area 201, and (C) the known orbital position (i.e. vector $d_{24(i)}$) of each GPS satellite 24(1)-(m) provided by the data component of the corresponding GPS signals 25(1)-(m).

The unit directional vector computation routine 196 computes the vectors $\hat{s}_{24(i)/29(j)}$ and $\hat{s}_{24(i)/26(k)}$ in the way discussed earlier. Thus, these vectors are computed from (A) the satellite orbital positions received in the data components of the GPS signals 25(1)-(m), and (B) the known locations (i.e. $e_{29(j)}$ and $e_{26(k)}$) of the omni-marker beacons 26(1)-(2) and 29(1)-(3) stored by data storage area 201 or provided by the data components of the beacon marker signals

27(1)(1)-(m), 27(2)(1)-(m), 30(1)(1)-(m), 30(2)(1)-(m), and 30(3)(1)-(m).

The accurate position generating routine 195 is called up by CPU 88 for more accurate navigation when airplane 21 is in view of any of the beacons 26(1)-(2) or 29(1)-(3). The routine 195 generates position determinations (i.e. vector x) using Code Based Differential GPS to within several meters of the exact location. The routine 195 can do so in the two ways discussed earlier.

In the first method, PRN code ranging between the antenna 38 and the omni-marker beacons 26(1)-(2) and/or 29(1)-(3) occurs as well as the relaying of information necessary to compute Code Based Differential GPS positions. As was mentioned earlier, this is done by employing the Equations (29), (30), (31), and/or (32) and, if applicable, Equation (10) in the iterative manner previously described. Thus, routine 195 can compute these position determinations (i.e. vector x) based on (A) the range measurements $R_{25(i)/34}$, $R_{30(i)(j)/38}$, and $R_{27(i)(k)/38}$ computed at each measurement epoch by the routine 192, (B) the known locations (i.e. $p_{29(j)}$ and $p_{26(k)}$) of the omni-marker beacons 26(1)-(2) and 29(1)-(3) with respect to the runway 23 threshold which are stored in data storage area 201 or provided by the data components of the beacon marker signals 27(1)(1)-(m), 27(2)(1)-(m), 30(1)(1)-(m), 30(2)(1)-(m), and 30(3)(1)-(m), (C) the unit directional vectors $\hat{s}_{24(i)/29(j)}$ and $\hat{s}_{24(i)/26(k)}$ computed by routine 196, (D) the attitude matrix A computed by attitude receiver 33, and (E) the known vector k to antenna 38 stored by the data storage area 201.

In the second method, only relaying of information for making differential corrections is done. In this case, routine 195 can compute these position determinations by first computing the vector position $e_{29(j)}$ and/or the vector position $e_{26(k)}$ of the omni-marker beacons 26(1)-(2) and/or 29(1)-(3) using Equations (37) and/or (38) in the way described earlier. Thus, routine 195 can compute these position determinations based on (A) the range measurements

$R_{30(i)(j)/38}$ and $R_{27(i)(k)/38}$ computed at each measurement epoch by the routine 192, and (B) the known orbital position (i.e. vector $d_{24(i)}$) of each GPS satellite 24(1)-(m) provided by the data component of the corresponding GPS signals 25(1)-(m). The routine 195 compares the computed vector position $e_{29(j)}$ and/or the vector position $e_{26(k)}$ with the actual known positions of the omni-marker beacons 26(k) or 29(j), and in response computes differential corrections to the range measurements $R_{30(i)(j)/38}$ and $R_{27(i)(k)/38}$.

Then, routine 195 computes the vector x using Equations (39) and/or (40) together with Equation (10) in the iterative manner described earlier. Thus, this computation is based on (A) the corrected range measurements $R_{30(i)(j)/38}$ and $R_{27(i)(k)/38}$ computed at each measurement epoch by the routine 195, (B) the known orbital position (i.e. vector $d_{24(i)}$) of each GPS satellite 24(1)-(m) provided by the data component of the corresponding GPS signals 25(1)-(m), (C) the known vector positions $e_{29(j)}$ and $e_{26(k)}$ of the omni-marker beacons 26(k) or 29(j) with respect to the center of the Earth 48, (D) the known vector positions $p_{29(j)}$ and $p_{26(k)}$ of the omni-marker beacons 26(k) or 29(j) with respect to the runway 23 threshold, (E) the attitude matrix A computed by attitude receiver 33, and (F) the known vector k to antenna 38 stored by the data storage area 201.

The initialization routine 197 generates the earlier described initialization values (i.e. the integer ambiguities $n_{25(i)/27(k)(i)}$ and $n_{25(i)/30(j)(i)}$) necessary for precise position determinations using Carrier Phase Differential GPS. It does so by employing the Equations (48), (49), and (10) in the iterative process previously discussed. Thus, the integer ambiguities integer ambiguities $n_{25(i)/27(k)(i)}$ and $n_{25(i)/30(j)(i)}$ are computed based on (A) the phase measurements $\Phi_{25(i)/34}$, $\Phi_{30(j)(i)/38}$, and $\Phi_{27(k)(i)/38}$ made by routine 192 and recorded by routine 197 over a number of measurement epochs by while airplane 21 is inside signal bubbles 28(1)-(2), (B) the known vector locations $p_{29(j)}$ and $p_{26(k)}$ of the omni-marker beacons 26(1)-(2) and 29(1)-(3) with

respect to the runway 23 threshold and which are stored in data storage area 201 or provided by the data components of the beacon marker signals 27(1)(1)-(m), 27(2)(1)-(m), 30(1)(1)-(m), 30(2)(1)-(m), and 30(3)(1)-(m), (C) the unit directional vectors $\hat{s}_{24(i)/29(j)}$ and $\hat{s}_{24(i)/26(k)}$ computed by routine 196, (D) the attitude matrix A computed by attitude receiver 33, and (E) the known vector k to antenna 38 stored by the data storage area 201. The computed integer ambiguities $n_{25(i)/27(k)(i)}$ and $n_{25(i)/30(j)(i)}$ are recorded in data storage area 201.

If the position receiver 32 receives the beacon marker signals 27(1)(1)-(m), 27(2)(1)-(m), 30(1)(1)-(m), 30(2)(1)-(m), and 30(3)(1)-(m) at the L2 frequency, then the routine 197 computes corrections to the phase measurments $\Phi_{30(j)(i)/38}$ and $\Phi_{27(k)(i)/38}$ based on the phase measurments $\Phi_{37(j)/38}$ and $\Phi_{36(k)/38}$ made by routine 192 to eliminate the error introduced by the frequency translation of these signals by transceivers 42(k) and 44(j) of omni-markers 29(j) and 26(k).

The precise position generating routine 199 is called up by CPU 88 for precise position determinations when the integer ambiguities $n_{25(i)/27(k)(i)}$ and $n_{25(i)/30(j)(i)}$ have been resolved and airplane 21 is still in at least one of the signal bubbles 31(1)-(3) of the omni-marker beacons 29(1)-(3). The routine 199 generates position determinations using Carrier Phase Differential GPS to within centimeters of the exact location. The precise position routine 199 generates the precise position vector x with Equation (46) in the previously discussed way. Thus, it computes the vector x based on (A) the stored integer ambiguities $n_{25(i)/30(j)(i)}$ resolved by routine 197, (B) the phase measurements $\Phi_{25(i)/34}$ and $\Phi_{27(k)(i)/38}$ made by routine 192 at each measurement epoch, (C) the known vector locations $p_{29(j)}$ of the omni-marker beacons 29(1)-(3) with respect to the runway 23 threshold and which are stored in data storage area 201 or provided by the data components of the beacon marker signals 30(1)(1)-(m), 30(2)(1)-(m), and 30(3)(1)-(m), (D) the unit directional vectors $\hat{s}_{24(i)/29(j)}$ computed by routine 196, (D) the attitude

matrix A computed by attitude receiver 33, and (E) the known vector k to antenna 38 stored by the data storage area 201.

As was just stated earlier, if the position receiver 32 receives the beacon marker signals 27(1)(1)-(m), 27(2)(1)-(m), 30(1)(1)-(m), 30(2)(1)-(m), and 30(3)(1)-(m) at the L2 frequency, then the routine 197 computes corrections to the phase measurments $\Phi_{30(j)(i)/38}$ and $\Phi_{27(k)(i)/38}$ based on the phase measurments $\Phi_{37(j)/38}$ and $\Phi_{36(k)/38}$ made by routine 192 to eliminate the error introduced by the frequency translation of these signals by transceivers 42(k) and 44(j) of omni-markers 29(j) and 26(k).

The integer hand-off routine 200 computes after the initialization period the integer ambiguities $n_{25(i)/30(j)(i)}$ associated with an additional GPS signal 25(i) and the corresponding extra beacon marker signal 30(j)(i) which were not in view during the initialization period or which were lost after this period. This is done by using Equation (46) in the way described earlier. The routine 199 will then use these additionally computed integer ambiguities $n_{25(i)/30(j)(i)}$ for computing the precise position vector x.

The synthesizer 86 and the reference oscillator 85 are coupled together. The synthesizer 86 is configured and coupled in the same way and generates the same type of down converting and clock signals as was described earlier for the synthesizer 56 of transceiver 42(k) or 44(j) 41 of Figure 16.

The clock signal generated by the synthesizer 85 is received by the signal processing stages 84(1)-(2) and the CPU 88. Since the CPU 88 and the signal processing stages 84(1)-(2) operate based on the same clock source, the carrier phase measurements and PRN code range measurements for each of the GPS signals 25(1)-(m) and beacon marker signals 27(k)(1)-(m) and 30(j)(1)-(m) are coherent (i.e. made at the same time) with respect to each other.

Figure 20 also shows the antennas 34 and 35(1)-(3) and the GPS attitude receiver 33. Antennas 34 and 35(1)-(3) receive GPS signals 25(1)-(4). As was indicated earlier, the positions of antennas 35(1)-(3) with respect to antenna 34

are respectively given by the vectors $x_{35(1)}$, $x_{35(2)}$, and $x_{35(3)}$ in the runway coordinate system 46 and given by the vectors $k_{35(1)}$, $k_{35(2)}$, and $k_{35(3)}$ in the body coordinate system 47.

The GPS attitude receiver 33 is coupled to GPS position receiver 32. It computes the attitude matrix A using Carrier Phase Differential GPS. As was described earlier, the attitude matrix A is used by the routine 197 of receiver 32 in computing the initialization values described earlier and is used by routine 199 of receiver 32 in computing the precise position vector y.

Figure 25 shows another embodiment for the airborne components of system 20. In this configuration, an inertial measurement unit (IMU) 130 has been substituted for the GPS attitude receiver 33. The IMU 130 is coupled to the CPU 88 of receiver 32.

In one embodiment, the IMU 130 can directly provide receiver 32 with the computed attitude matrix A. Alternatively, the computer memory 89 can store a routine 131 for converting the attitude parameters yaw, pitch, and roll supplied by the IMU 130 into the matrix A.

Figure 22 shows another embodiment for the airborne components of system 20. In this configuration, only a single antenna 34 and a single receiver 32 are mounted on airplane 21. Receiver 32 now has only one signal path. It accommodates all of the signals 25(1)-(m), 27(1)(1)-(m), 27(2)(1)-(m), 30(1)(1)-(m), 30(2)(1)-(m), and 30(3)(1)-(m) received from the antenna 34. As shown in Figure 11, this may be done for wide area ranging where the beacon marker signals 27(1)(1)-(m), 27(2)(1)-(m), 30(1)(1)-(m), 30(2)(1)-(m), and 30(3)(1)-(m) are received from a geosynchronous transponder 49.

Thus, in this embodiment the signal receiving block 80 has a single receiving stage 83 and the signal processing block 81 has a single multi-channel signal processing stages 84. The signal receiving stage 83 is coupled to the signal processing stage 84.

The signal receiving stage 83 is coupled to the antenna 34. Except for this difference, the signal receiving stage 83 is otherwise configured and coupled in the same way and performs the same signal extracting and down converting functions as was earlier described for the signal receiving stage 53 of Figure 16. Moreover, the signal processing stage 84 is configured and coupled in the same way, performs the same type of separating and phase locking functions, and generates the same type of phase information (i.e. tracking error signals) as was described earlier for the signal processing stage 51.

The computer 87 is coupled to the signal processing stage 83. It otherwise is coupled in the same way and stores the same routines as was the computer 87 described earlier for the receiver 32 of the embodiment of Figure 20.

CONCLUSION

Many of the individual elements of the components of system 20 are known in the art. In fact, many are found in commercially available products.

Specifically, the GPS antennas 34, 35(1)-(3), 38, 40(1)-(3), 41(1)-(2), 45(1)-(3), and 43(1)-(3) are of the type commonly known as standard hemispherical microstrip patch antennas. The GPS antenna 45 is of the type commonly known as a standard helical antenna.

The signal receiving stages 53(1)-(4) and 83(1)-(5), the signal processing stages 84(1)-(5), the oscillators 55 and 85, the synthesizers 56 and 86, and the computers 57 and 87 and their respective signal processing routines 160 and 190, carrier phase measuring routines 161 and 191, PRN code phase measuring routines 192, may be of the type commonly found in a Trimble 4000 Series GPS receiver. These are described in U.S. Patent Ser. No. 4,754,465 which is hereby explicitly incorporated by reference.

Although these figures and the accompanying description are provided in relation to an airplane, one skilled in the

art would readily understand that the invention is applicable to Carrier Phase Differential Position determinations for any land, sea, air, or space vehicle. Furthermore, while the present invention has been described with reference to a few specific embodiments, the description is illustrative of the invention and is not to be construed as limiting the invention. Indeed, various modifications may occur to those skilled in the art without departing from the true spirit and scope of the invention as defined by the appended claims.

CLAIMS

What is claimed is:

1. A GPS beacon comprising:

signal receiving means for receiving GPS signals each having a carrier component and a pseudo-random code component;

beacon signal generating means for generating beacon signals each having a carrier component and a pseudo-random code component respectively phase locked to the carrier component and the pseudo-random code component of a corresponding one of the received GPS signals; and

transmitting means for transmitting the generated beacon signals.

2. The GPS beacon of claim 1 wherein the signal processing means includes for each of the received GPS signals:

a first phase locked loop for phase locking onto the pseudo-random code component of a respective one of the received GPS signals and for producing a pseudo-random code phase locking clock signal;

a second phase locked loop for phase locking onto the carrier component of the respective one of the received GPS signals and producing a reconstructed carrier component that is an in phase version of the phase locked onto carrier component;

a transmit pseudo-random code generator, responsive to the pseudo-random code phase locking clock signal, for generating a transmit pseudo random code component corresponding to and in phase with the phase locked onto pseudo-random code component; and

means for combining the transmit pseudo-random code component and the reconstructed carrier component to generate a respective one of the beacon signals.

3. The GPS beacon of claim 2 wherein:

the first phase locked loop includes a receive pseudo-random code generator, responsive to the pseudo-random code

phase locking clock signal, for generating a receive pseudo-random code component that is an in phase version of the phase locked onto pseudo-random code component;

the second phase locked loop includes means, responsive to the receive pseudo-random code component, for phase locking onto the carrier component of the respective one of the received GPS signals and producing the reconstructed carrier component.

4. A GPS reference station comprising at least one GPS beacon, each GPS beacon positioned at a fixed location and including:

signal receiving means for receiving GPS signals each having a carrier component and a pseudo-random code component;

signal generating means for generating beacon signals each having a carrier component and a pseudo-random code component respectively phase locked to the carrier component and the pseudo-random code component of a corresponding one of the received GPS signals; and

transmitting means for transmitting the generated beacon signals.

5. The GPS reference system of claim 4 wherein:

the at least one beacon is for use with a mobile GPS receiver system that receives the GPS and beacon signals and is mounted on an aircraft having a flight trajectory for a final approach to a runway; and

the at least one GPS beacon includes a GPS beacon positioned in front of the runway.

6. The GPS reference system of claim 5 wherein the GPS beacon positioned in front of the runway is also positioned below a predefined estimate of the flight trajectory.

7. The GPS reference system of claim 5 wherein the GPS beacon positioned in front of the runway is also positioned directly below a predefined estimate of the flight trajectory.

8. The GPS reference system of claim 4 wherein:

the at least one GPS beacon is for use with a mobile GPS receiver system that receives the GPS and beacon signals and is mounted on an aircraft having a flight trajectory for a final approach to a runway; and

the at least one GPS beacon includes a first GPS beacon and a second GPS beacon positioned in front of the runway on opposite sides of a predefined estimate of the flight trajectory.

9. The GPS reference system of claim 8 wherein the first and second GPS beacons are also positioned below the predefined estimate of the flight trajectory.

10. A mobile GPS receiver system for use with a GPS beacon positioned at a fixed location, the GPS beacon receiving GPS signals and transmitting in response beacon signals, each of the GPS signals having a pseudo-random code component, each of the beacon signals having a pseudo-random code component phase locked to the pseudo-random code component of a corresponding one of the received GPS signals, the mobile GPS receiver system comprising:

signal receiving means for receiving the GPS and beacon signals;

range measuring means for making at a measurement epoch a range measurement for the pseudo random code component of each of the GPS and beacon signals received by the receiving means; and

position generating means, responsive to the range measurements, for generating coordinate values representing a position at the measurement epoch.

11. The mobile GPS receiver system of claim 10 wherein the position generating means includes means for computing the coordinate values in accordance with a set of simultaneous equations that relate the coordinate values and the range measurements.

12. The mobile GPS receiver system of claim 10 further comprising:

means for generating initial guess values representing an initial guess position at the measurement epoch;

the position generating means includes means for computing the coordinate values in accordance with a set of linearized simultaneous equations that relate the coordinate values, the initial guess values, and the range measurements.

13. A GPS system comprising:

a GPS beacon positioned at a fixed location including:

signal receiving means for receiving GPS signals each having a pseudo-random code component;

signal generating means for generating beacon signals each having a pseudo-random code component phase locked to the pseudo-random code component of a corresponding one of the received GPS signals; and

transmitting means for transmitting the generated beacon signals; and

a mobile GPS receiver system including:

signal receiving means for receiving the GPS and beacon signals;

range measuring means for making at a measurement epoch a range measurement for the pseudo random code component of each of the GPS and beacon signals received by the receiving means; and

position generating means, responsive to the range measurements, for generating coordinate values representing a position at the measurement epoch.

14. The GPS system of claim 13 wherein the position generating means includes means for computing the coordinate values in accordance with a predefined set of simultaneous equations that relate the coordinate values and the range measurements.

15. The GPS system of claim 13 wherein:

the mobile GPS receiver system further includes means for generating initial guess values representing an initial guess position at the measurement epoch;

the position generating means includes means for computing the coordinate values in accordance with a predefined set of linearized simultaneous equations that relate the coordinate values, the initial guess values, and the range measurements.

16. The GPS system of claim 13 further comprising a geosynchronous satellite transponder for receiving the beacon signals transmitted by the GPS beacon and re-transmitting the beacon signals to the mobile GPS receiver system.

17. A method of making GPS position determinations comprising the steps of:

with a GPS beacon positioned at a fixed location:

receiving GPS signals each having a pseudo-random code component;

generating beacon signals each having a pseudo-random code component phase locked to the pseudo-random code component of a corresponding one of the GPS signals received with the GPS beacon; and

transmitting the beacon signals; and

with a mobile GPS receiver system:

receiving the GPS and beacon signals;

making at a measurement epoch range measurements for the pseudo-random code component of each of the GPS and beacon signals received with the mobile GPS receiver system; and

generating coordinate values representing a position at the measurement epoch in response to the range measurements.

18. The method of claim 17 wherein the position generating step includes the step of computing the coordinate values in accordance with a predefined set of simultaneous equations

that relate the coordinate values and the range measurements.

19. The method of claim 17 further comprising the step of:

with the mobile GPS receiver system, generating initial guess values representing an initial guess position at the measurement epoch;

the coordinate value generating step including computing the coordinate values in accordance with a predefined set of linearized simultaneous equations that relate the initial guess values and the range measurements.

20. The method of claim 17 further comprising the step of, with a geosynchronous satellite transponder, receiving the beacon signals transmitted with the GPS beacon and re-transmitting the beacon signals to the mobile GPS receiver system.

21. A mobile GPS receiver system for use with at least one GPS beacon, each GPS beacon positioned at a fixed location and receiving GPS signals and transmitting in response beacon signals, each of the GPS signals having a carrier component, each of the beacon signals having a carrier component phase locked to the carrier component of a corresponding one of the received GPS signals, the mobile GPS receiver system comprising:

signal receiving means for receiving the GPS and first beacon signals;

phase measuring means for making at each of a plurality of measurement epochs a phase measurement for the carrier component of each of the GPS and first beacon signals received by the receiving means;

wherein for the phase measurements made for the carrier component of each of the GPS signals and the corresponding one of the first beacon signals, there is an associated integer wavelength ambiguity; and

integer ambiguity resolution means, responsive to the phase measurements, for resolving the integer wavelength ambiguities.

22. The mobile GPS receiver system of claim 21 wherein the integer ambiguity resolution means includes means for explicitly resolving the integer wavelength ambiguities in accordance with a predefined set of simultaneous equations that relate the phase measurements and the integer wavelength ambiguities.

23. The mobile GPS receiver system of claim 21 further comprising:

means for generating initial guess values representing an initial guess position at each of the measurement epochs;

the integer ambiguity resolution means includes means for explicitly resolving the integer wavelength ambiguities in accordance with a predefined set of linearized simultaneous equations that relate the phase measurements, the initial guess values, and the integer wavelength ambiguities.

24. The mobile GPS receiver system of claim 21 wherein:

the phase measurements are made during a period corresponding to a large angular change in geometry between the mobile GPS receiver system and each GPS beacon; and

the integer ambiguity resolution means includes means for explicitly resolving the integer wavelength ambiguities based on the phase measurements made during the period.

25. The mobile GPS receiver system of claim 21 wherein:

the phase measuring means includes means for making at a subsequent measurement epoch a phase measurement for the carrier component of each of the GPS and beacon signals;

the mobile GPS receiver system further comprises position generating means, responsive to the phase measurements made at the subsequent measurement epoch and to the resolved integer wavelength ambiguities, for generating coordinate

values representing a position at the subsequent measurement epoch.

26. The mobile GPS receiver system of claim 25 wherein:

the mobile GPS receiver system is also for use with at least one other GPS beacon, each other GPS beacon positioned at a fixed location and receiving the GPS signals and transmitting other beacon signals, each of the other beacon signals having a carrier component phase locked to the carrier component of a corresponding one of the GPS signals received by the at least one other GPS beacon;

the receiving means includes means for receiving the other beacon signals;

the phase measuring means includes means for making at each of the plurality of measurement epochs a phase measurement for the carrier component of each of the other beacon signals; and

the integer ambiguity resolution means includes means, further responsive to the phase measurements made for the other beacon signals, for resolving the integer wavelength ambiguities.

27. A GPS system comprising:

at least one GPS beacon, each GPS beacon positioned at a fixed location and including:

beacon receiving means for receiving GPS signals each having a carrier component;

beacon signal generating means for generating beacon signals each having a carrier component phase locked to the carrier component of a corresponding one of the GPS signals received with the beacon receiving means; and

beacon transmitting means for transmitting the generated beacon signals; and

a mobile GPS receiver system including:

mobile system signal receiving means for receiving the GPS and beacon signals;

phase measuring means for making at each of a plurality of measurement epochs a phase measurement for the carrier component of each of the GPS and beacon signals received by the mobile system receiving means;

wherein for the phase measurements made for the carrier component of each of the GPS signals and the corresponding one of the beacon signals, there is an associated integer wavelength ambiguity; and

integer ambiguity resolution means, responsive to the phase measurements, for resolving the integer wavelength ambiguities.

28. The GPS system of claim 27 wherein the integer ambiguity resolution means includes means for explicitly resolving the integer wavelength ambiguities in accordance with a predefined set of simultaneous equations that relate the phase measurements and the integer wavelength ambiguities.

29. The GPS system of claim 27 wherein:

the mobile GPS receiver system further includes means for generating initial guess values representing an initial guess position at each of the plurality of measurement epochs;

the integer ambiguity resolution means includes means for explicitly resolving the integer wavelength ambiguities in accordance with a predefined set of linearized simultaneous equations that relate the phase measurements, the initial guess values, and the integer wavelength ambiguities.

30. The mobile GPS receiver system of claim 27 wherein:

the phase measurements are made during a period corresponding to a large angular change in geometry between the mobile GPS receiver system and each GPS beacon; and

the integer ambiguity resolution means includes means for explicitly resolving the integer wavelength ambiguities based on the phase measurements made during the period.

31. The GPS system of claim 27 wherein:

the mobile GPS receiver system is mounted on an aircraft having a flight trajectory fc a final approach to a runway:

the at least one GPS beacon includes a GPS beacon positioned in front of the runway.

32. The GPS system of claim 31 wherein the GPS beacon positioned in front of the runway is also positioned below a predefined estimate of the flight trajectory.

33. The GPS system of claim 31 wherein the GPS beacon positioned in front of the runway is also positioned directly below a predefined estimate of the flight trajectory.

34. The GPS system of claim 27 wherein:

the mobile GPS receiver system is mounted on an aircraft having a flight trajectory for a final approach to a runway:

the at least one GPS beacon includes a first GPS beacon and a second GPS beacon positioned in front of the runway on opposite sides of a predefined estimate of the flight trajectory.

35. The GPS system of claim 34 wherein the first and second GPS beacons are also positioned below the predefined estimate of the flight trajectory.

36. The GPS system of claim 27 wherein:

the phase measuring means includes means for making at a subsequent measurement epoch a phase measurement for the carrier component of each of the GPS and beacon signals;

the mobile GPS receiver system further comprises position generating means, responsive to the phase measurements made at the subsequent measurement epoch and to the resolved integer wavelength ambiguities, for generating coordinate values representing a position at the subsequent measurement epoch.

37. The GPS system of claim 36 wherein:

the mobile GPS receiver system is also for use with at least one other GPS beacon, each other GPS beacon positioned at a fixed location and including:

other beacon receiving means for receiving the GPS signals;

other beacon signal generating means for generating other beacon signals, each of the other beacon signals having a carrier component phase locked to the carrier component of a corresponding one of the GPS signals received by the other beacon receiving means;

other beacon transmitting means for transmitting the other beacon signals;

the mobile system receiving means includes means for receiving the other beacon signals;

the phase measuring means includes means for making at each of the plurality of measurement epochs a phase measurement for the carrier component of each of the other beacon signals received by the mobile system receiving means; and

the integer ambiguity resolution means includes means, further responsive to the phase measurements made for the other beacon signals, for resolving the integer wavelength ambiguities.

38. A method of making GPS position determinations utilizing a mobile GPS receiver system and at least one GPS beacon, each GPS beacon positioned at a fixed location, the method comprising the steps of:

with each GPS beacon:

receiving GPS signals each having a carrier component;

generating beacon signals each having a carrier component phase locked to the carrier component of a corresponding one of the GPS signals received with each GPS beacon; and

transmitting the generated beacon signals; and

with a mobile GPS receiver system:

receiving the GPS and first beacon signals;

phase measuring means for making at each of a plurality of measurement epochs a phase measurement for the carrier component of each of the GPS and beacon signals received with the mobile GPS receiver system;

wherein for the phase measurements made for the carrier component of each of the GPS signals and the corresponding one of the beacon signals, there is an associated integer wavelength ambiguity; and

resolving the integer wavelength ambiguities in response to the phase measurements.

39. The method of claim 38 wherein the integer ambiguity resolution step includes the step of explicitly resolving the integer wavelength ambiguities in accordance with a predefined set of simultaneous equations that relate the phase measurements and the integer wavelength ambiguities.

40. The method of claim 38 further comprising the step of:

generating initial guess values representing an initial guess position at each of the plurality of measurement epochs;

the integer ambiguity resolution step including the step of explicitly resolving the integer wavelength ambiguities in accordance with a predefined set of linearized simultaneous equations that relate the phase measurements, the initial guess values, and the integer wavelength ambiguities.

41. The method of claim 38 wherein:

the phase measurements are made during a period corresponding to a large angular change in geometry between the mobile GPS receiver system and each GPS beacon; and

the integer ambiguity resolution step includes the step of explicitly resolving the integer wavelength ambiguities based on the phase measurements made during the period.

42. The method of claim 38 wherein:

the phase measurement making step includes the step of making at a subsequent measurement epoch a phase measurement for the carrier component of each of the GPS and beacon signals;

the method further comprises the step of, with the mobile GPS receiver system, generating coordinate values representing a position at the subsequent measurement epoch in response to the phase measurements made at the subsequent measurement epoch and to the resolved integer wavelength ambiguities.

43. The method of claim 42 wherein the method also utilizes at least one other GPS beacon, each other GPS beacon positioned at a fixed location, the method further comprising the steps of:

with each other GPS beacon:

receiving the GPS signals;

generating other beacon signals, each of the other beacon signals having a carrier component phase locked to the carrier component of a corresponding one of the GPS signals received with each other beacon;

transmitting the other beacon signals;

the receiving step with the mobile GPS receiver system including receiving the other beacon signals;

the phase measurement making step including making at each of the plurality of measurement epochs a phase measurement for the carrier component of each of the other beacon signals received with the mobile GPS receiver system; and

the integer ambiguity resolution step includes the step of resolving the integer wavelength ambiguities further in response to the phase measurements made for the other beacon signals.

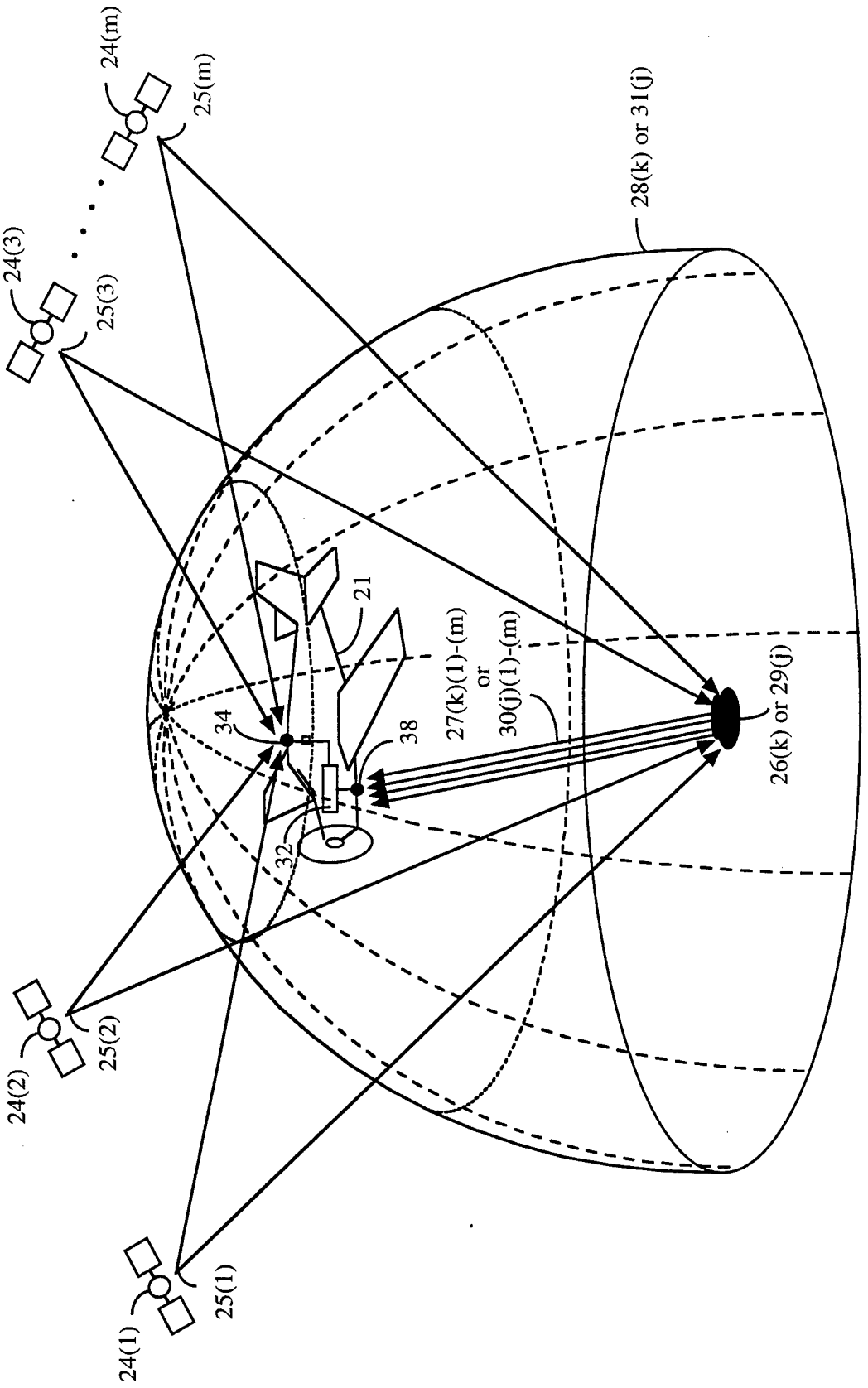
24(m)
25(m)
24(3)
25(3)
28(k) or 31(j)
21
27(k)(1)-(m)
or
30(j)(1)-(m)
34
38
26(k) or 29(j)
32
25(2)
24(2)
25(1)
24(1)

Figure 1

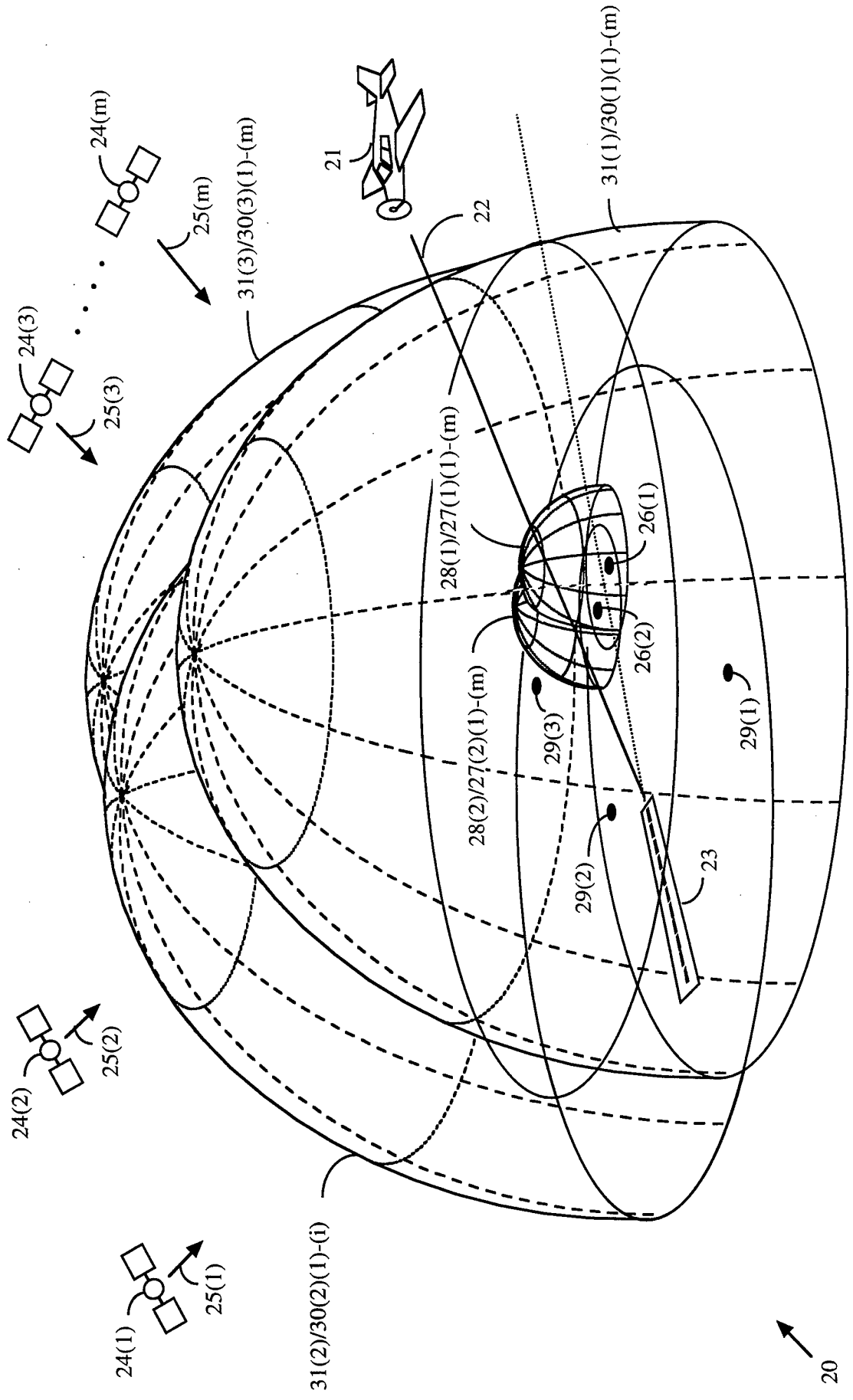
24(m)
25(m)
31(3)/30(3)(1)-(m)
21
22
31(1)/30(1)(1)-(m)
24(3)
25(3)
28(1)/27(1)(1)-(m)
26(1)
26(2)
28(2)/27(2)(1)-(m)
29(3)
29(1)
24(2)
25(2)
29(2)
23
24(1)
25(1)
31(2)/30(2)(1)-(i)
20

Figure 2

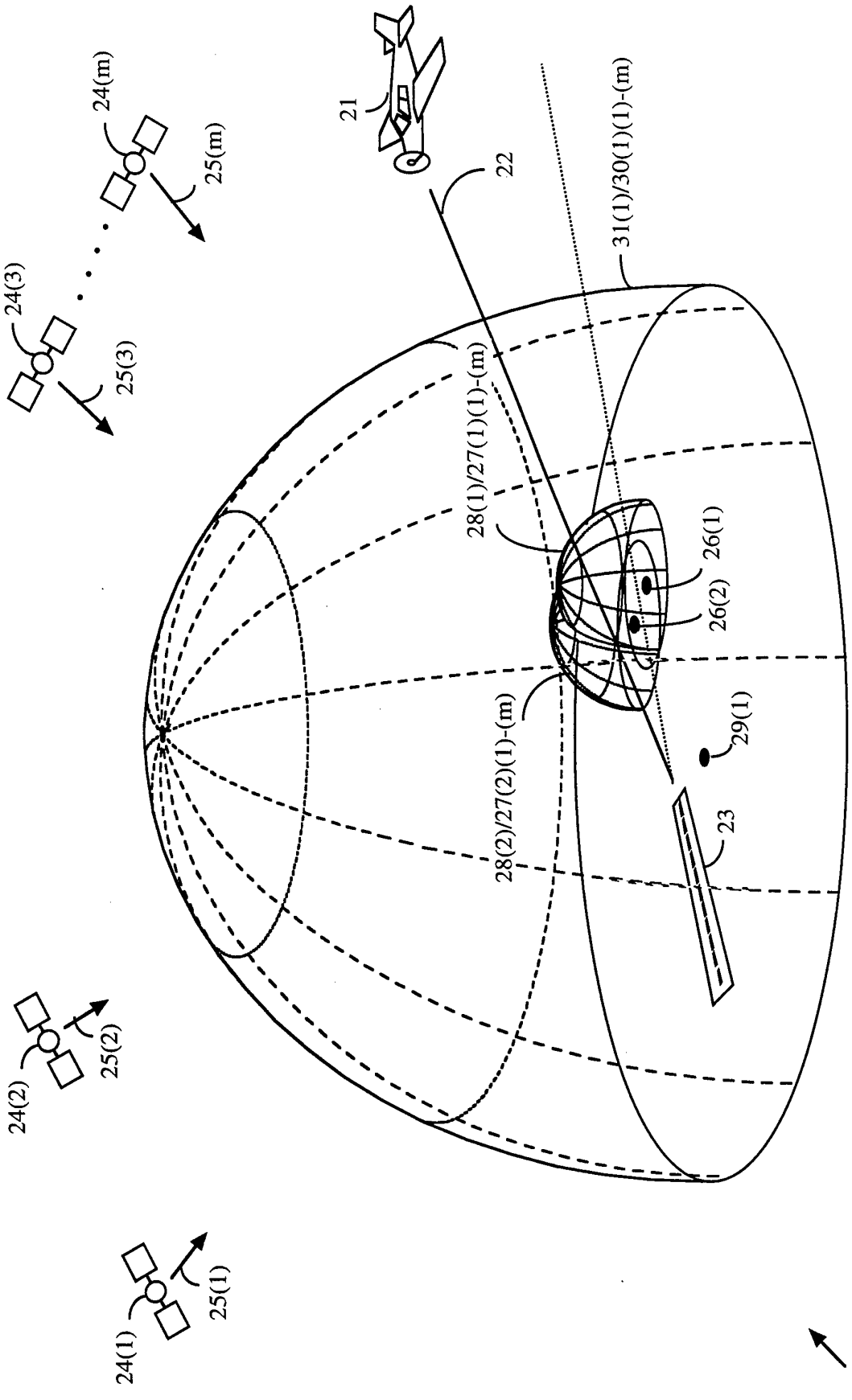
24(m)
25(m)
24(3)
25(3)
24(2)
25(2)
24(1)
25(1)
21
22
31(1)/30(1)(1)-(m)
28(1)/27(1)(1)-(m)
26(1)
26(2)
28(2)/27(2)(1)-(m)
29(1)
23
20

Figure 3

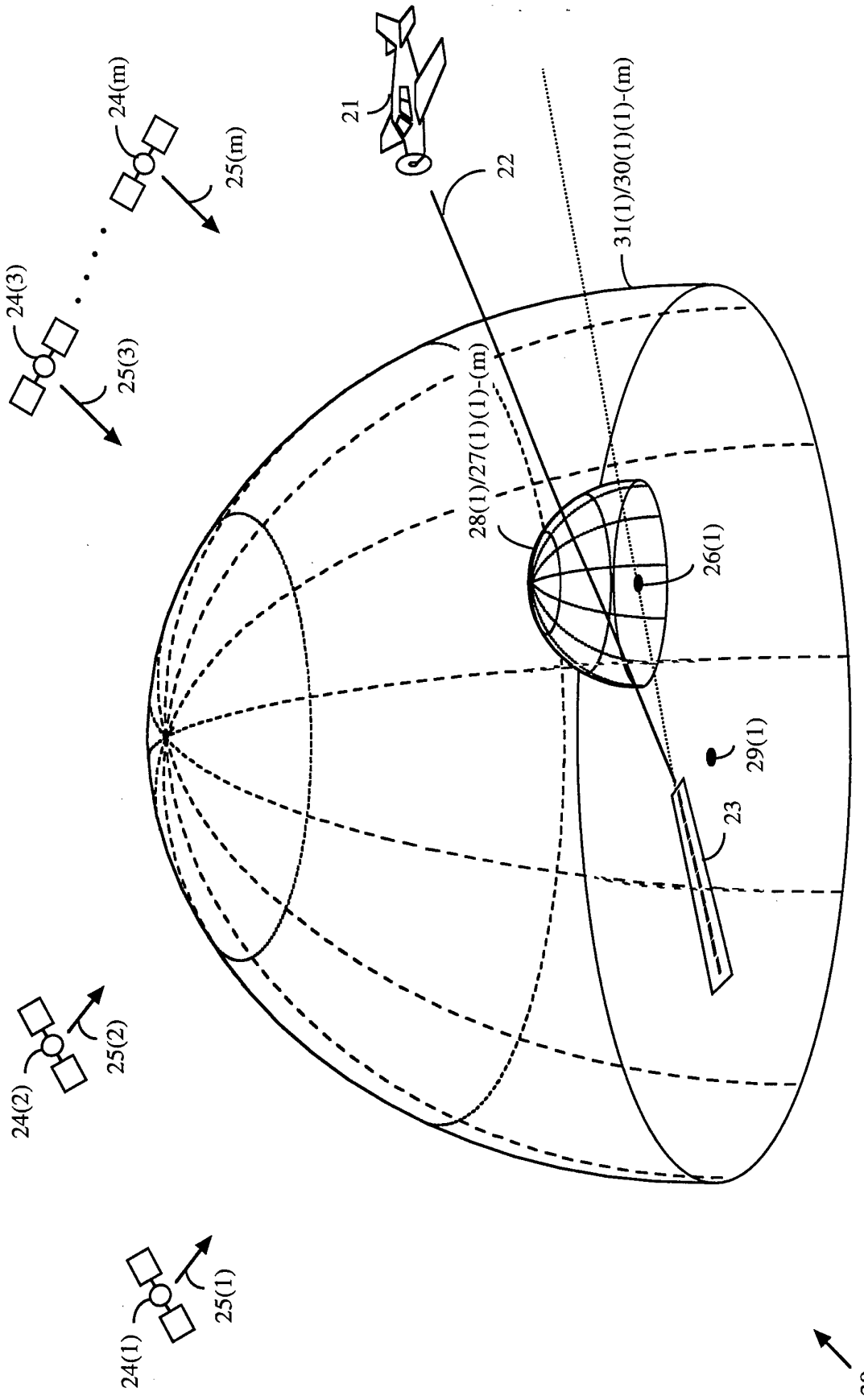
24(m)
25(m)
21
22
31(1)/30(1)(1)-(m)
24(3)
25(3)
28(1)/27(1)(1)-(m)
26(1)
29(1)
23
24(2)
25(2)
24(1)
25(1)
20

Figure 4

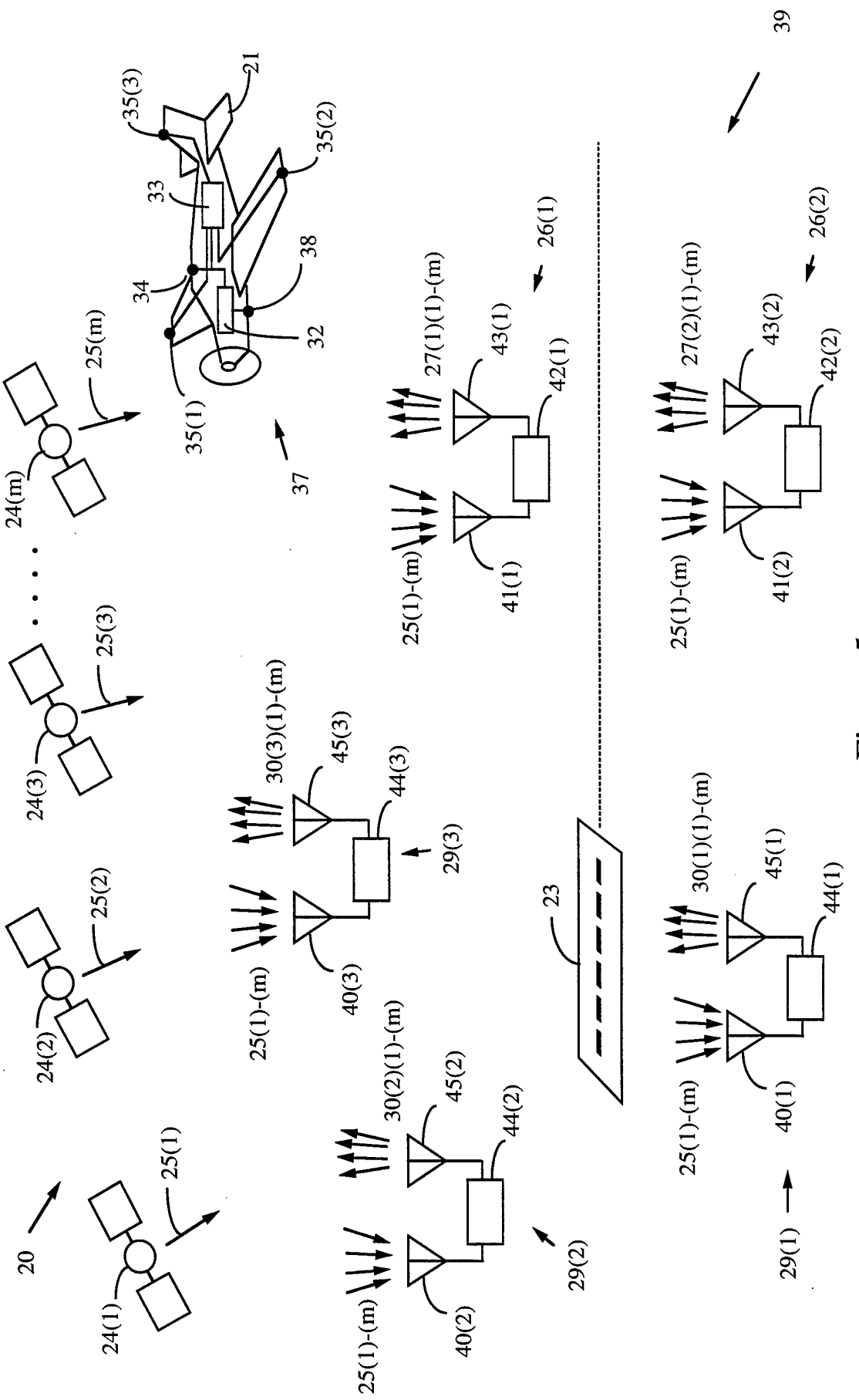
20
24(1)
25(1)
24(2)
25(2)
24(3)
25(3)
24(m)
25(m)
35(1)
35(2)
35(3)
21
33
34
38
32
37
39
23
25(1)-(m)
40(1)
41(1)
42(1)
43(1)
44(1)
45(1)
26(1)
27(1)(1)-(m)
29(1)
40(2)
41(2)
42(2)
43(2)
44(2)
45(2)
26(2)
27(2)(1)-(m)
29(2)
30(2)(1)-(m)
40(3)
41(3)
42(3)
43(3)
44(3)
45(3)
29(3)
30(3)(1)-(m)

Figure 5

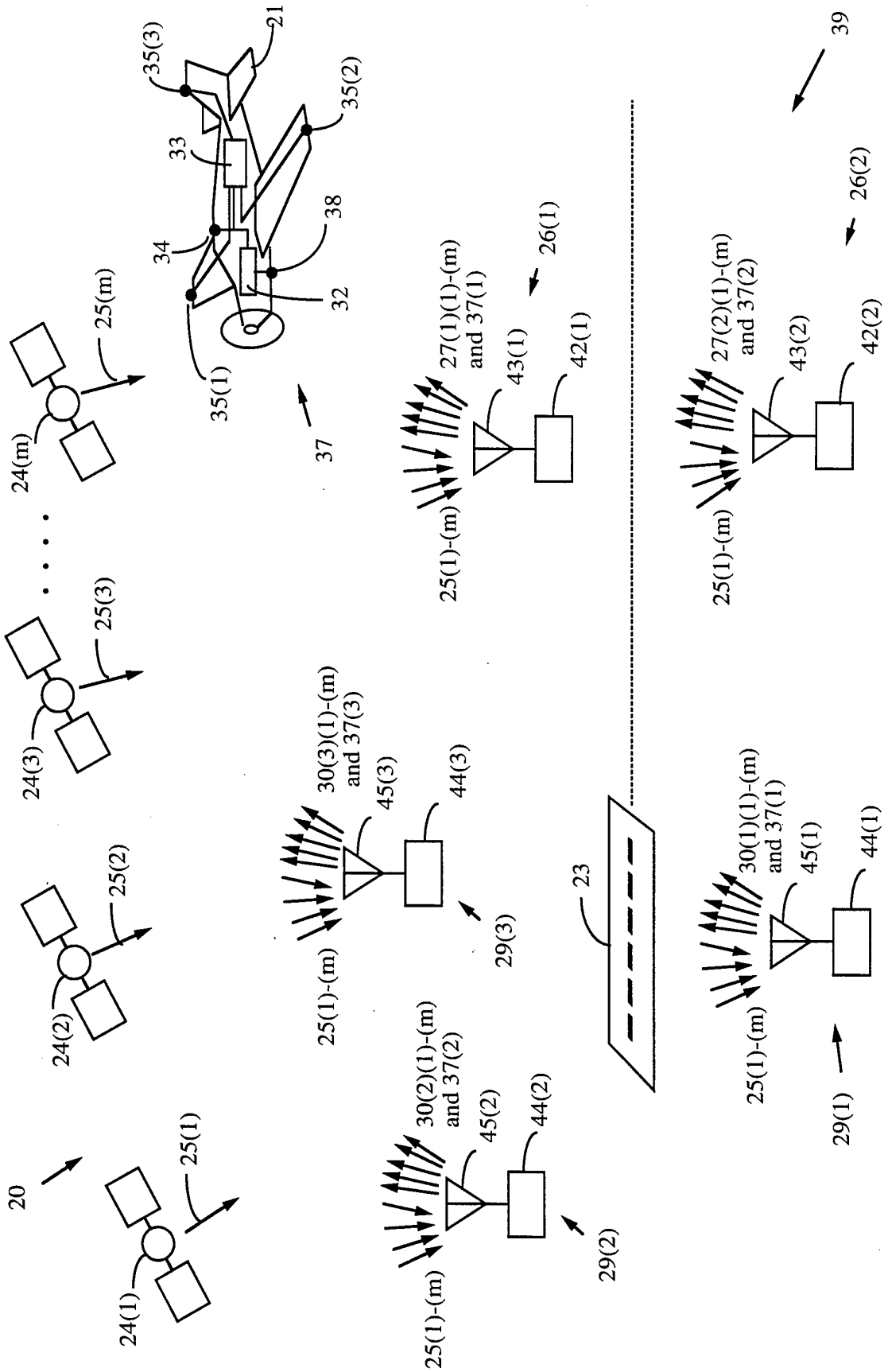
20
24(1)
25(1)
24(2)
25(2)
24(3)
25(3)
24(m)
25(m)
35(1)
35(2)
35(3)
21
33
34
38
32
37
25(1)-(m)
30(1)(1)-(m) and 37(1)
45(1)
44(1)
29(1)
25(1)-(m)
30(2)(1)-(m) and 37(2)
45(2)
44(2)
29(2)
25(1)-(m)
30(3)(1)-(m) and 37(3)
45(3)
44(3)
29(3)
23
25(1)-(m)
27(1)(1)-(m) and 37(1)
43(1)
42(1)
26(1)
25(1)-(m)
27(2)(1)-(m) and 37(2)
43(2)
42(2)
26(2)
39

Figure 6

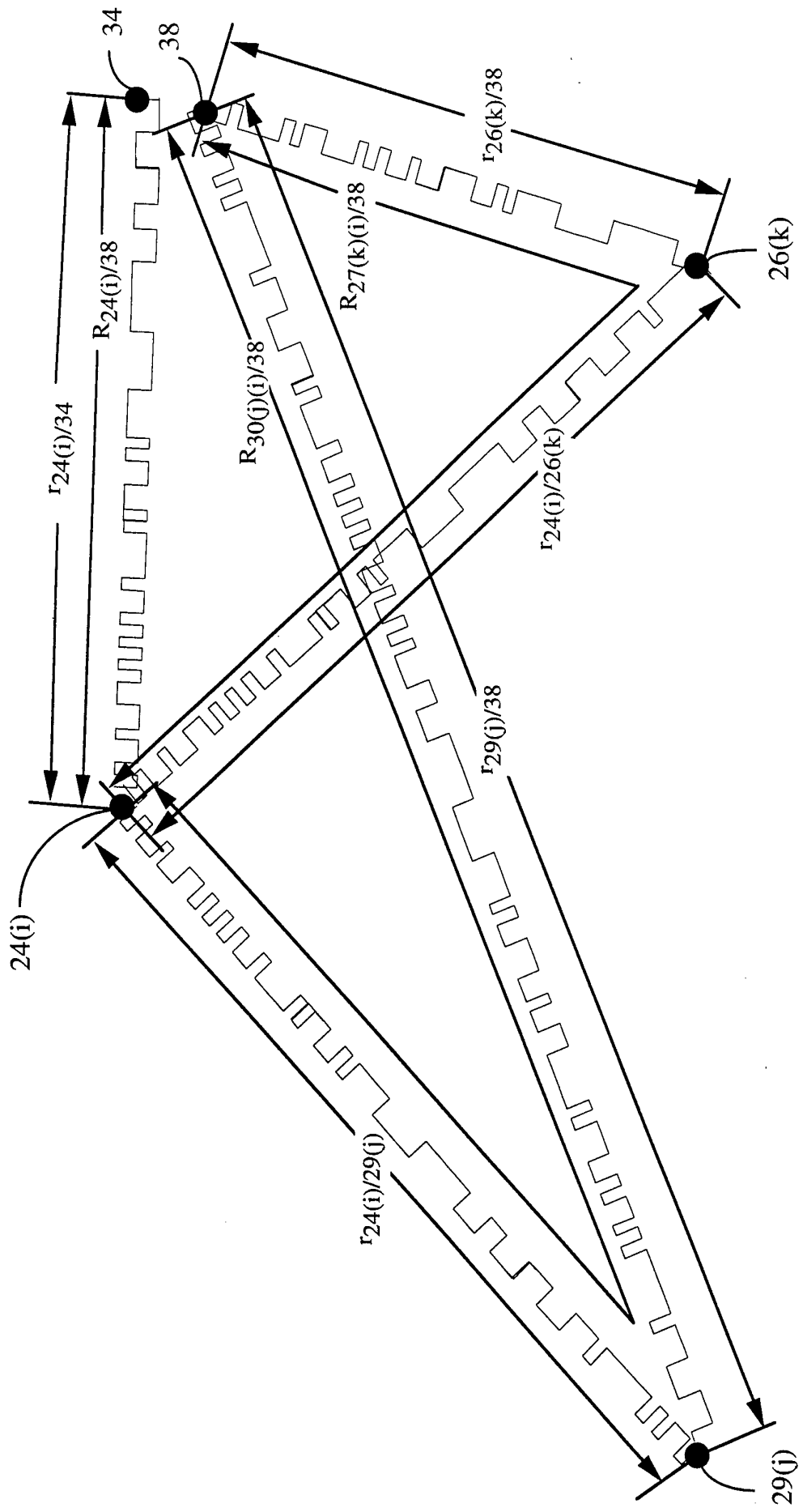
34
38
$r_{26(k)/38}$
$R_{27(k)(i)/38}$
26(k)
$R_{24(i)/38}$
$r_{24(i)/34}$
$R_{30(j)(i)/38}$
$r_{24(i)/26(k)}$
$r_{29(j)/38}$
24(i)
$r_{24(i)/29(j)}$
29(j)

Figure 7

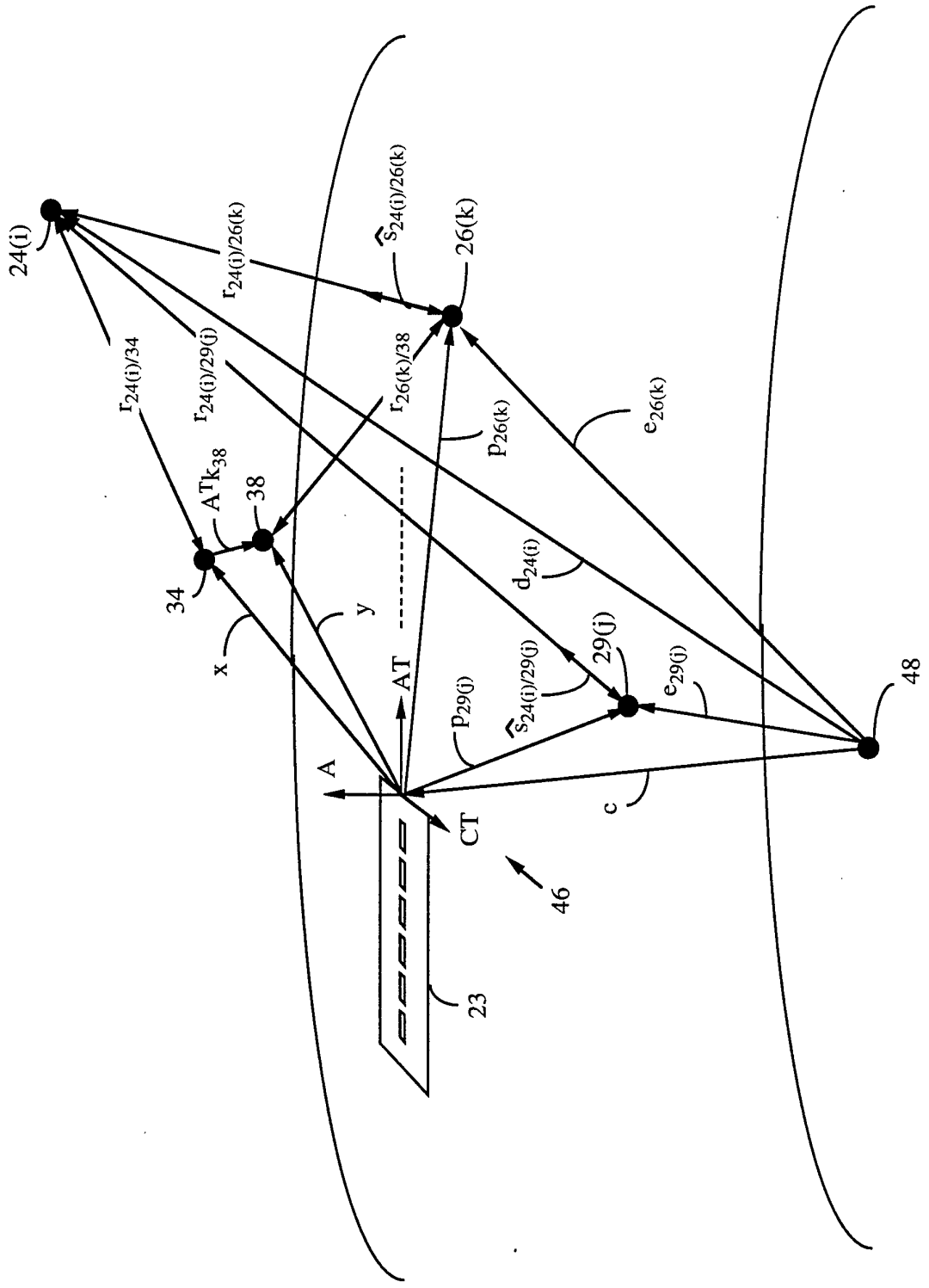
24(i)
$r_{24(i)/26(k)}$
$\hat{s}_{24(i)/26(k)}$
26(k)
$r_{24(i)/34}$
$r_{24(i)/29(j)}$
$r_{26(k)/38}$
$p_{26(k)}$
$e_{26(k)}$
ATk_{38}
38
34
$d_{24(i)}$
y
x
AT
$p_{29(j)}$
$\hat{s}_{24(i)/29(j)}$
29(j)
$e_{29(j)}$
48
A
CT
c
46
23

Figure 8

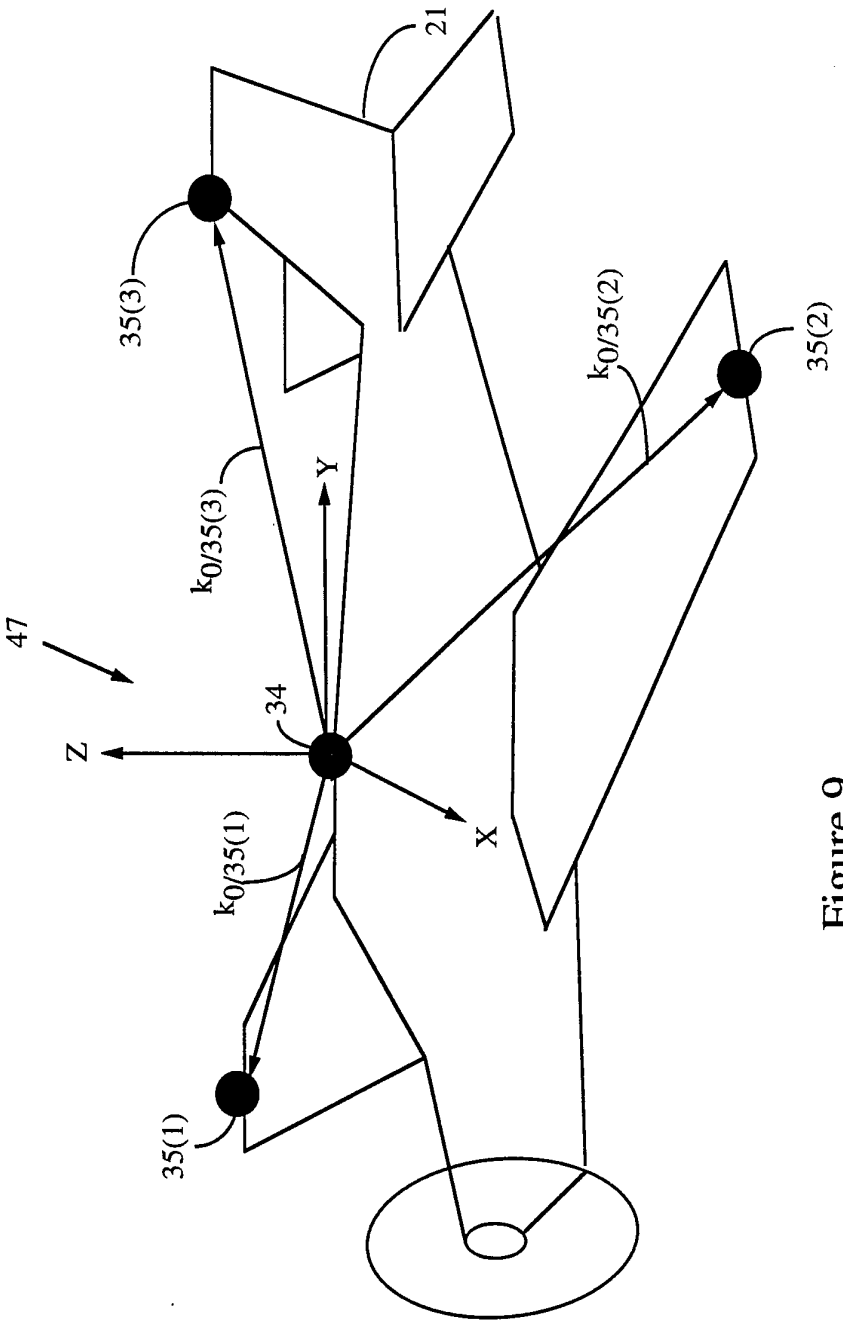

Figure 9

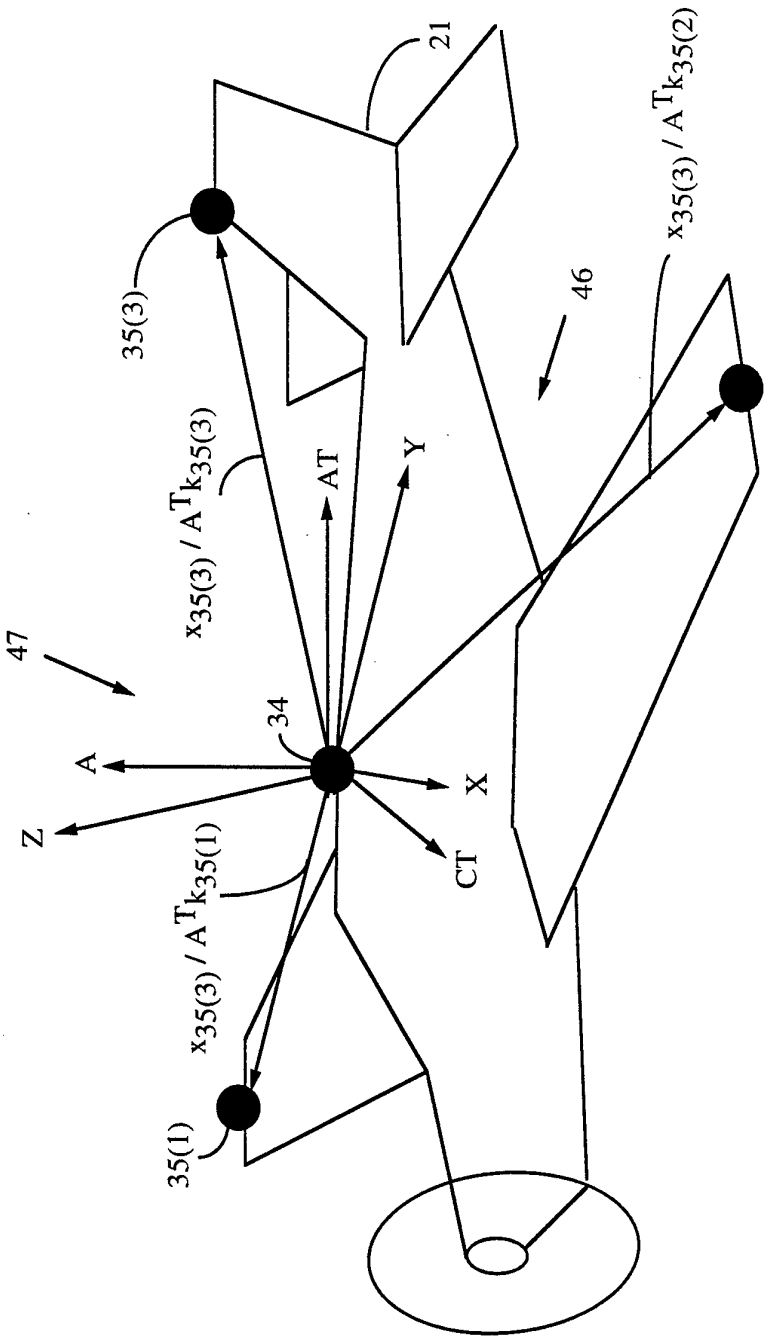
21
35(3)
46
$x_{35(3)} / A^T k_{35(3)}$
$x_{35(3)} / A^T k_{35(2)}$
35(2)
AT
Y
47
34
A
X
Z
CT
$x_{35(3)} / A^T k_{35(1)}$
35(1)

Figure 10

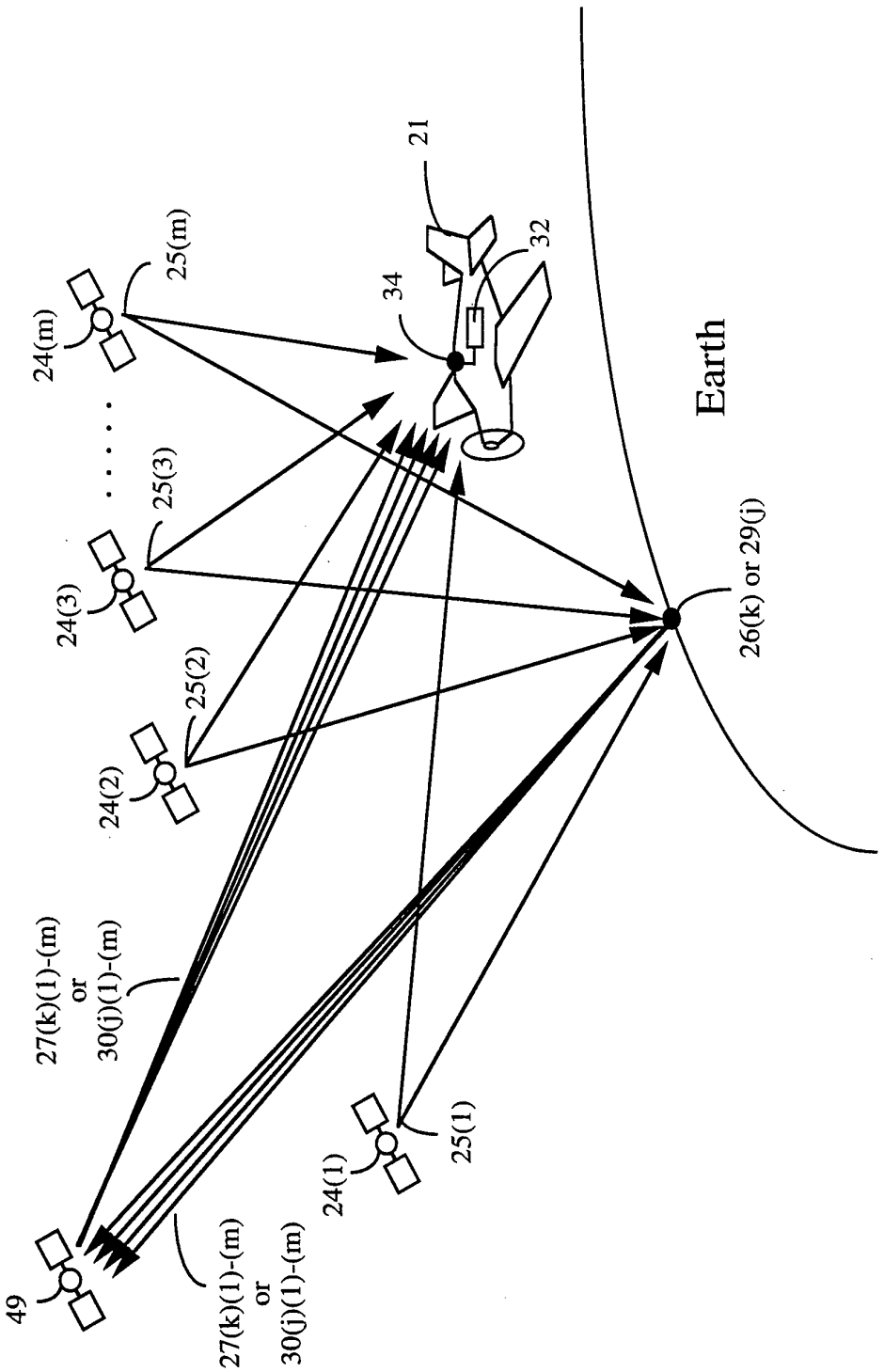
21
32
34
25(m)
24(m)
25(3)
24(3)
25(2)
24(2)
25(1)
24(1)
Earth
26(k) or 29(j)
27(k)(1)-(m)
or
30(j)(1)-(m)
27(k)(1)-(m)
or
30(j)(1)-(m)
49

Figure 11

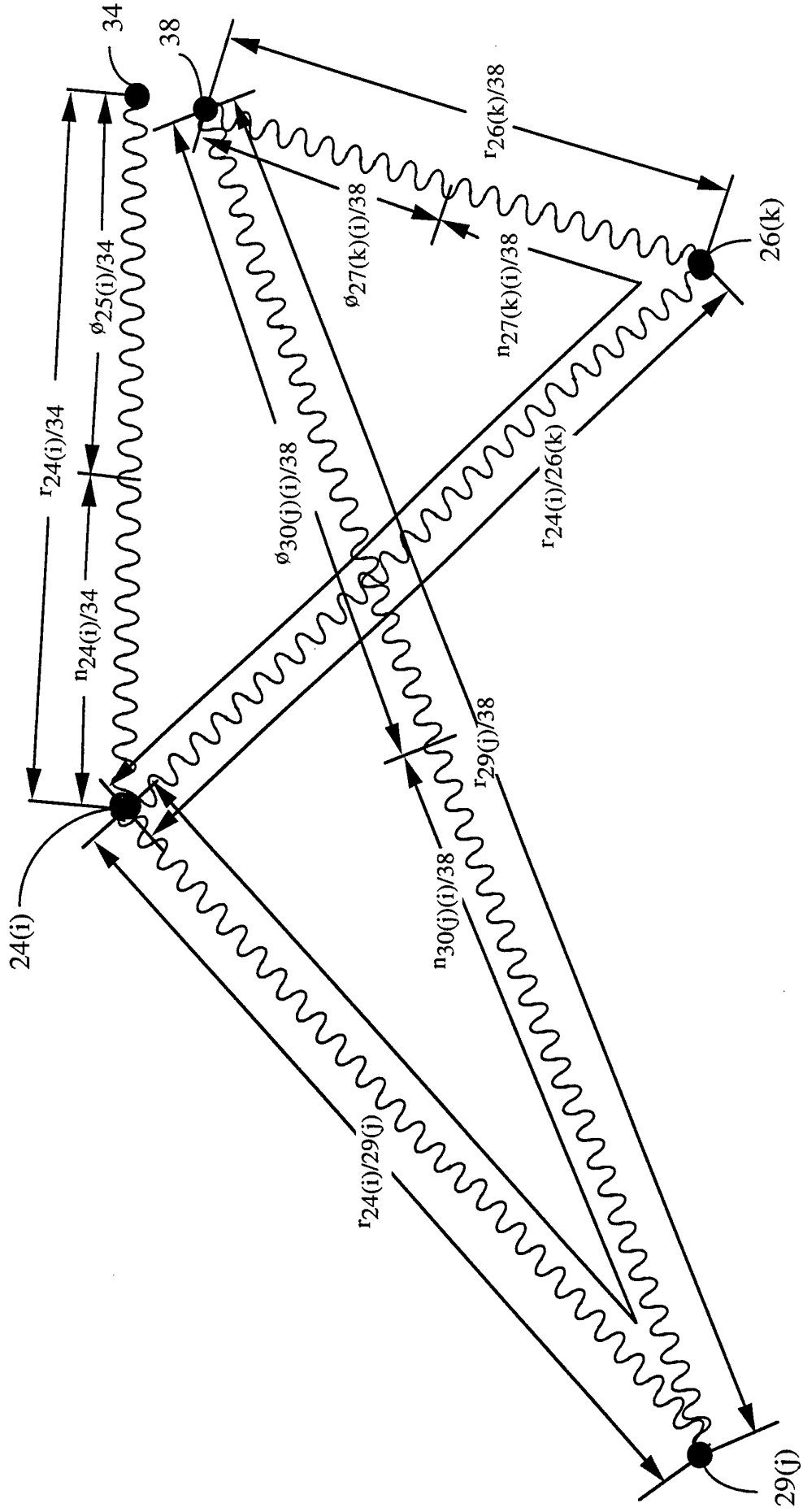
34
38
$r_{26(k)/38}$
$\phi_{27(k)(i)/38}$
26(k)
$n_{27(k)(i)/38}$
$\phi_{25(i)/34}$
$r_{24(i)/34}$
$\phi_{30(j)(i)/38}$
$r_{24(i)/26(k)}$
$n_{24(i)/34}$
$r_{29(j)/38}$
$n_{30(j)(i)/38}$
24(i)
$r_{24(i)/29(j)}$
29(j)

Figure 12

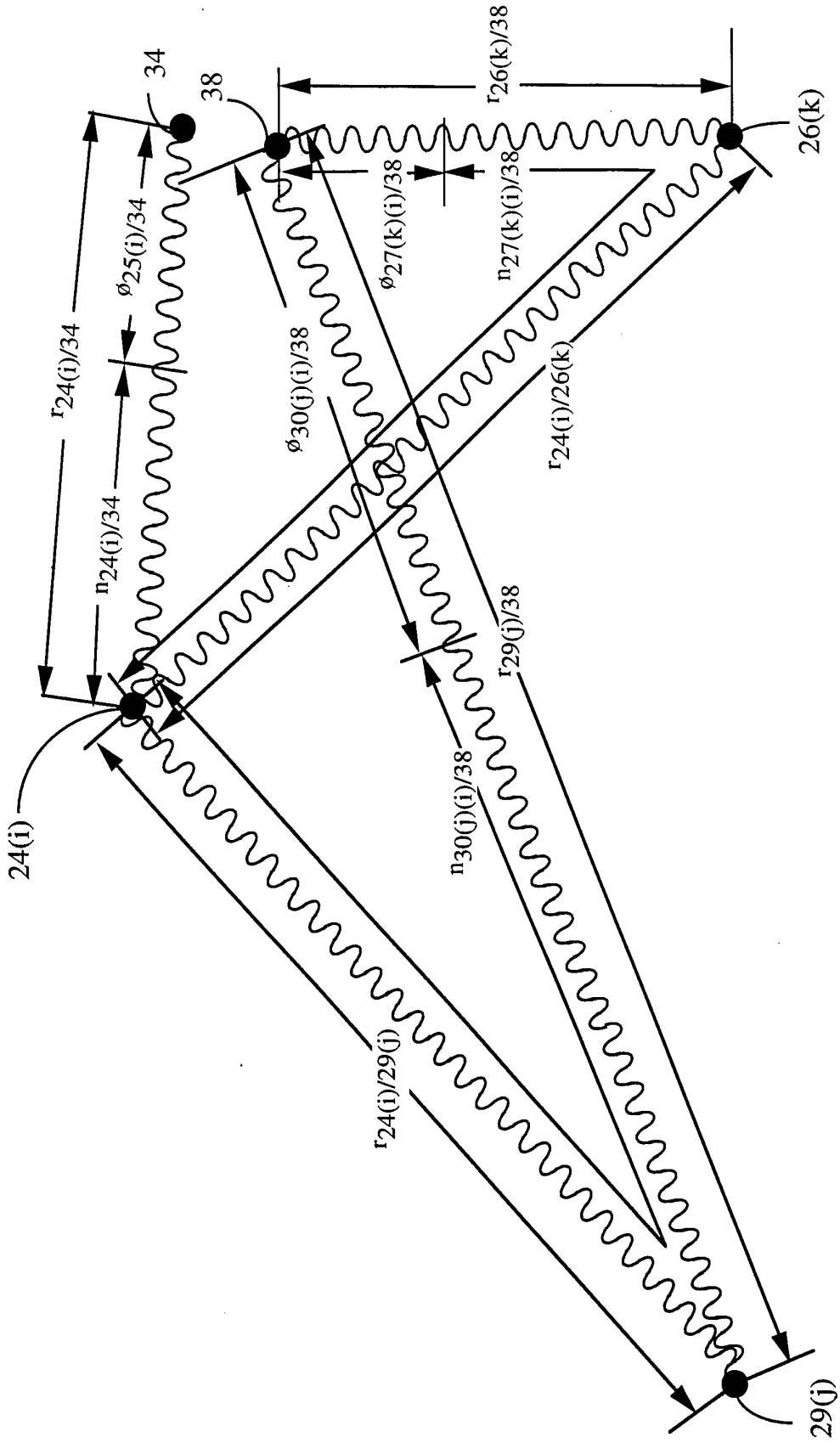
34
38
$r_{26(k)/38}$
26(k)
$\phi_{25(i)/34}$
$\phi_{27(k)(i)/38}$
$n_{27(k)(i)/38}$
$r_{24(i)/34}$
$\phi_{30(j)(i)/38}$
$r_{24(i)/26(k)}$
$n_{24(i)/34}$
$r_{29(j)/38}$
24(i)
$n_{30(j)(i)/38}$
$r_{24(i)/29(j)}$
29(j)

Figure 13

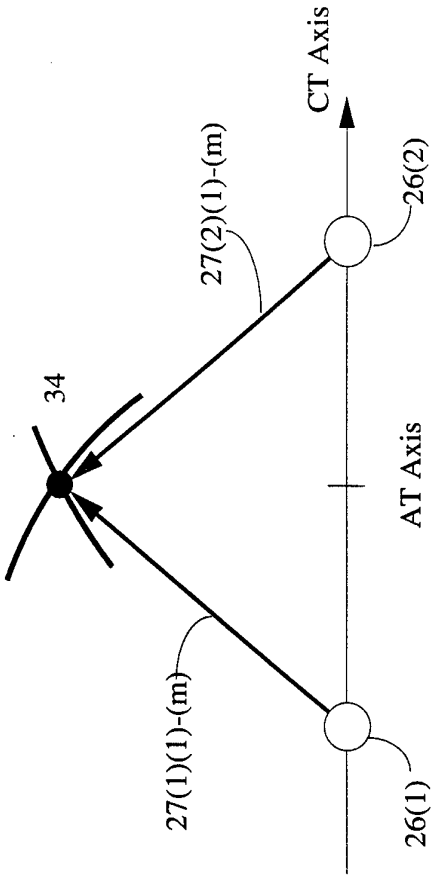

Figure 14

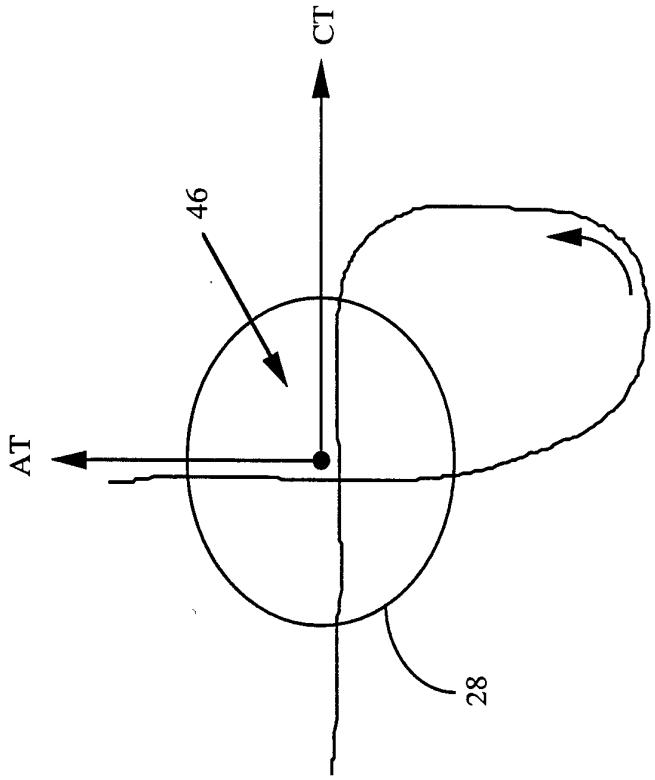

Figure 15

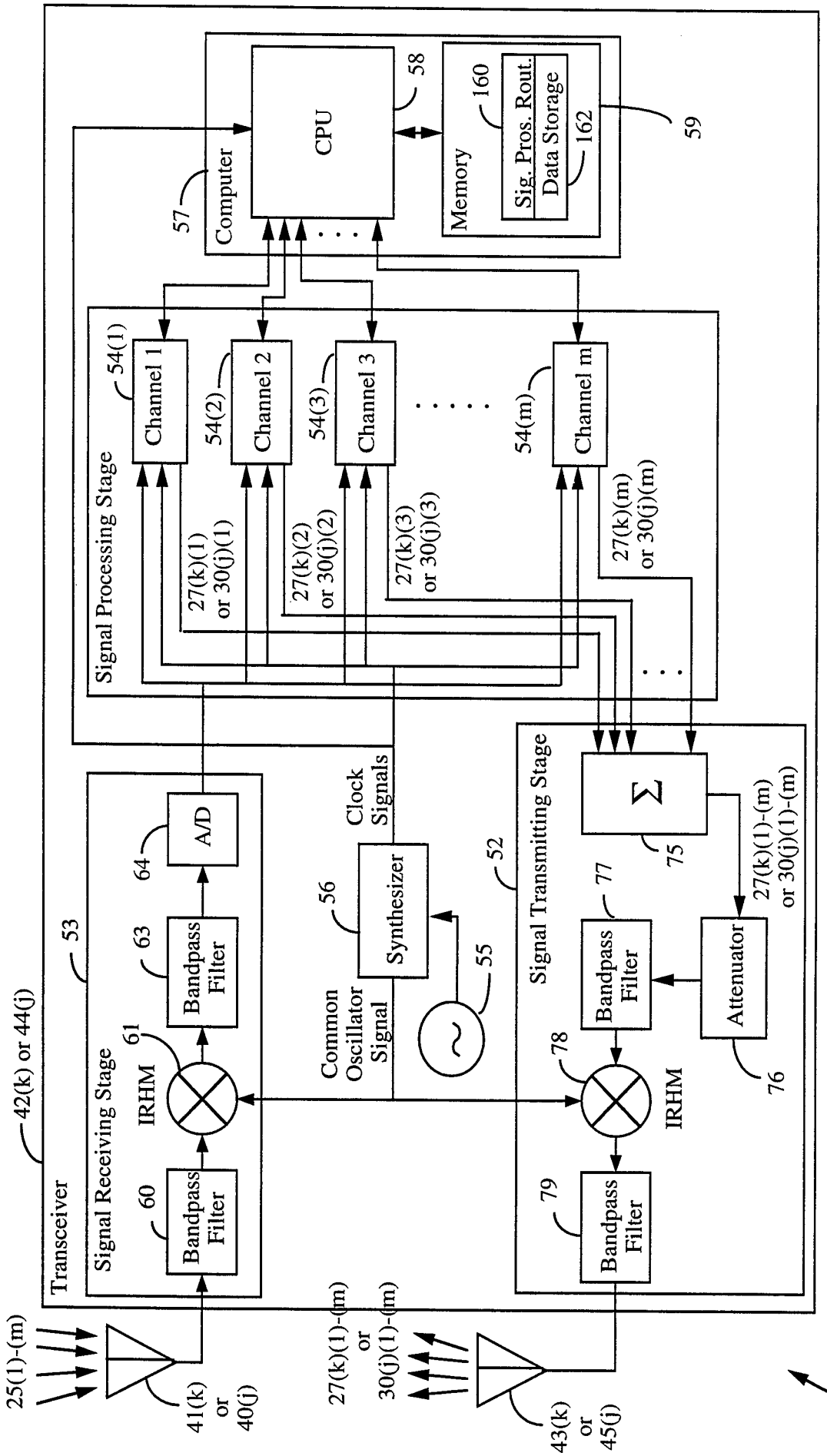
Transceiver
42(k) or 44(j)
Signal Receiving Stage
53
Bandpass Filter
60
IRHM
61
Bandpass Filter
63
A/D
64
Common Oscillator Signal
Synthesizer
56
55
Clock Signals
52
Signal Transmitting Stage
Bandpass Filter
79
IRHM
78
Bandpass Filter
77
Attenuator
76
Σ
75
27(k)(1)-(m) or 30(j)(1)-(m)
Signal Processing Stage
Channel 1
54(1)
Channel 2
54(2)
Channel 3
54(3)
Channel m
54(m)
27(k)(1) or 30(j)(1)
27(k)(2) or 30(j)(2)
27(k)(3) or 30(j)(3)
27(k)(m) or 30(j)(m)
Computer
57
CPU
58
Memory
59
Sig. Pros. Rout.
160
Data Storage
162
25(1)-(m)
41(k) or 40(j)
27(k)(1)-(m) or 30(j)(1)-(m)
43(k) or 45(j)
26(k) or 29(j)

Figure 16

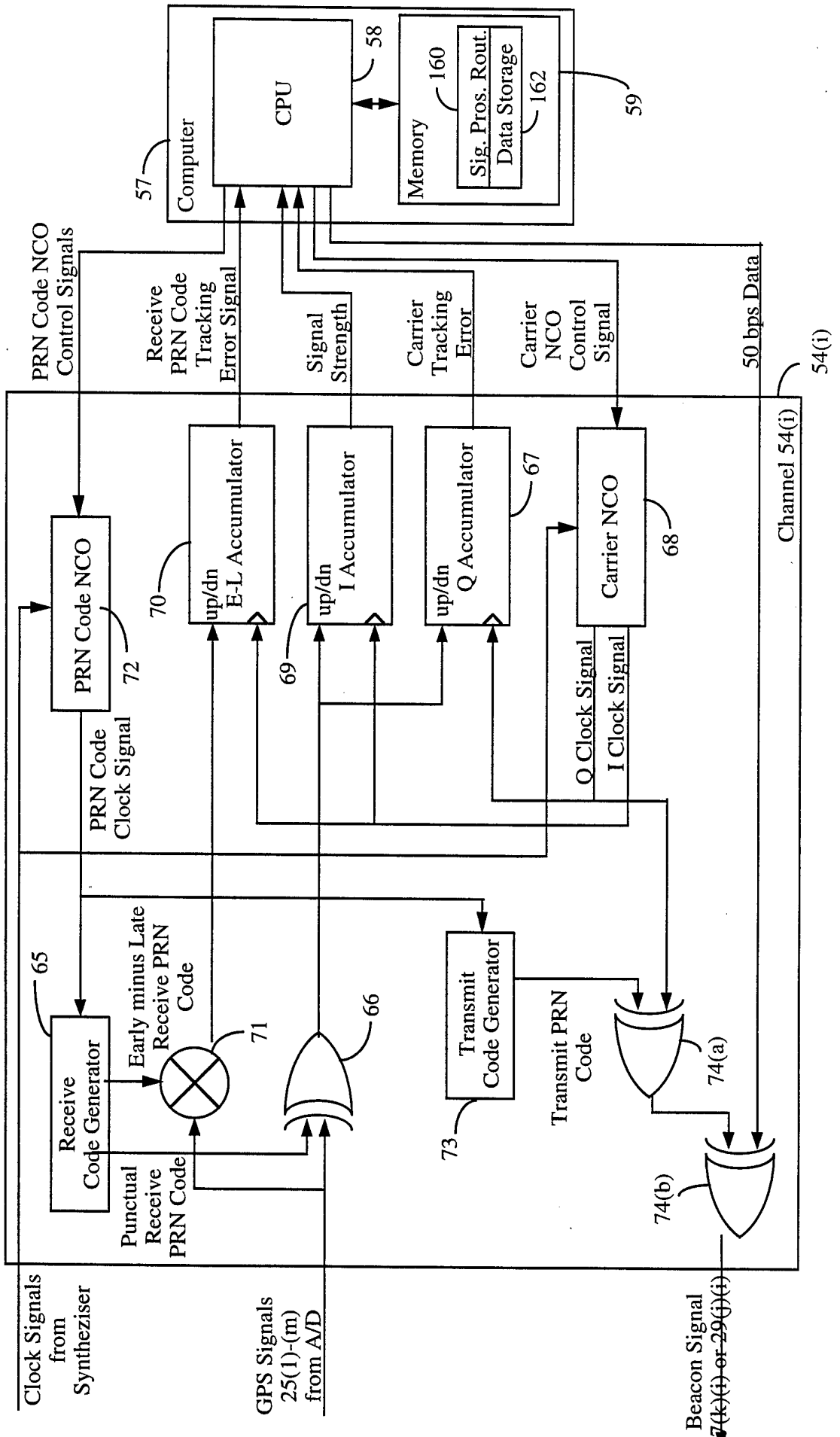
Computer
57
CPU
58
Memory
59
160
Sig. Pros. Rout.
162
Data Storage
PRN Code NCO Control Signals
Receive PRN Code Tracking Error Signal
Signal Strength
Carrier Tracking Error
Carrier NCO Control Signal
50 bps Data
54(i)
Channel 54(i)
PRN Code NCO
72
PRN Code Clock Signal
up/dn E-L Accumulator
70
up/dn I Accumulator
69
up/dn Q Accumulator
67
Carrier NCO
68
Q Clock Signal
I Clock Signal
Receive Code Generator
65
Early minus Late Receive PRN Code
71
Punctual Receive PRN Code
66
Transmit Code Generator
73
Transmit PRN Code
74(a)
74(b)
Clock Signals from Syntheziser
GPS Signals 25(1)-(m) from A/D
Beacon Signal 27(k)(i) or 29(k)(i)

Figure 17

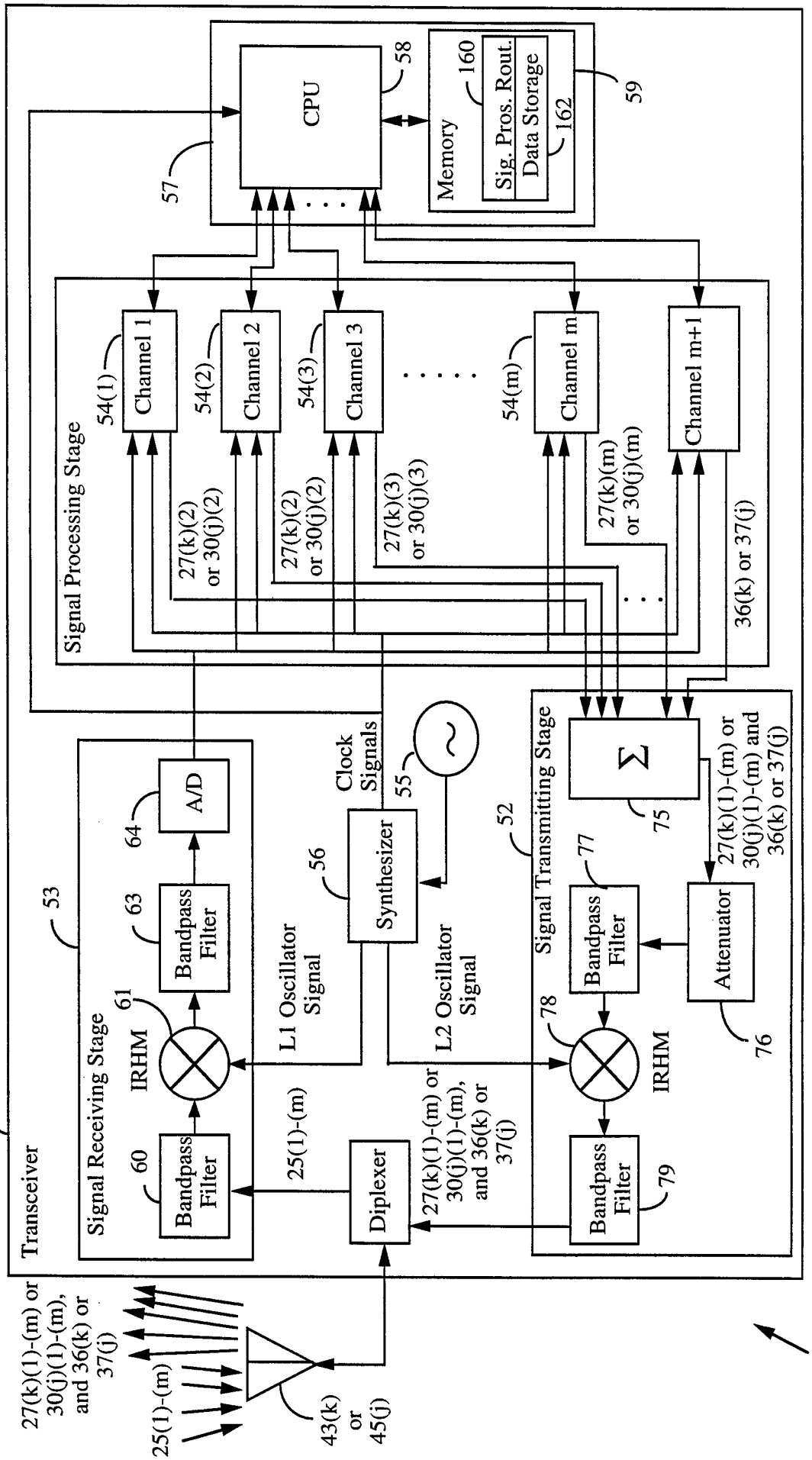
Transceiver
42(k) or 44(j)
Signal Processing Stage
Channel 1
Channel 2
Channel 3
Channel m
Channel m+1
54(1)
54(2)
54(3)
54(m)
CPU
58
57
Memory
160
Sig. Pros. Rout.
Data Storage
162
59
27(k)(2) or 30(j)(2)
27(k)(3) or 30(j)(3)
27(k)(m) or 30(j)(m)
36(k) or 37(j)
Signal Receiving Stage
53
A/D
64
Bandpass Filter
63
Bandpass Filter
60
IRHM
61
L1 Oscillator Signal
L2 Oscillator Signal
Clock Signals
Synthesizer
56
55
Diplexer
25(1)-(m)
27(k)(1)-(m) or 30(j)(1)-(m), and 36(k) or 37(j)
Signal Transmitting Stage
52
Σ
75
27(k)(1)-(m) or 30(j)(1)-(m) and 36(k) or 37(j)
Bandpass Filter
77
Attenuator
76
Bandpass Filter
78
IRHM
Bandpass Filter
79
27(k)(1)-(m) or 30(j)(1)-(m), and 36(k) or 37(j)
25(1)-(m)
43(k) or 45(j)
26(k) or 29(j)

Figure 18

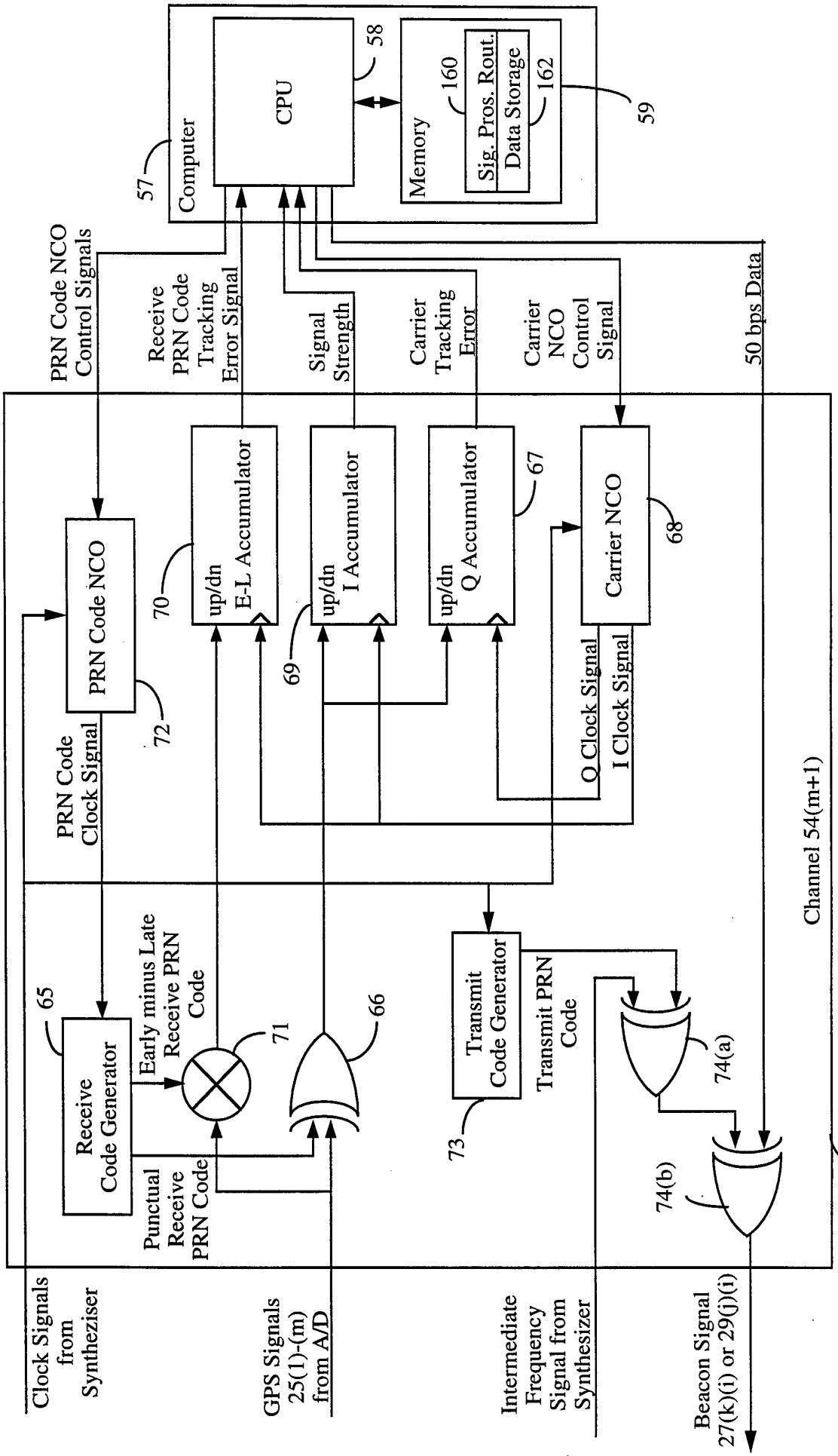
Computer
57
CPU
58
Memory
59
160
Sig. Pros. Rout.
Data Storage
162
PRN Code NCO Control Signals
Receive PRN Code Tracking Error Signal
Signal Strength
Carrier Tracking Error
Carrier NCO Control Signal
50 bps Data
PRN Code NCO
72
up/dn E-L Accumulator
70
up/dn I Accumulator
69
up/dn Q Accumulator
67
Carrier NCO
68
PRN Code Clock Signal
Q Clock Signal
I Clock Signal
Receive Code Generator
65
Early minus Late Receive PRN Code
71
66
Punctual Receive PRN Code
Transmit Code Generator
73
Transmit PRN Code
74(a)
74(b)
Channel 54(m+1)
54(m+1)
Clock Signals from Syntheziser
GPS Signals 25(1)-(m) from A/D
Intermediate Frequency Signal from Synthesizer
Beacon Signal 27(k)(i) or 29(j)(i)

Figure 19

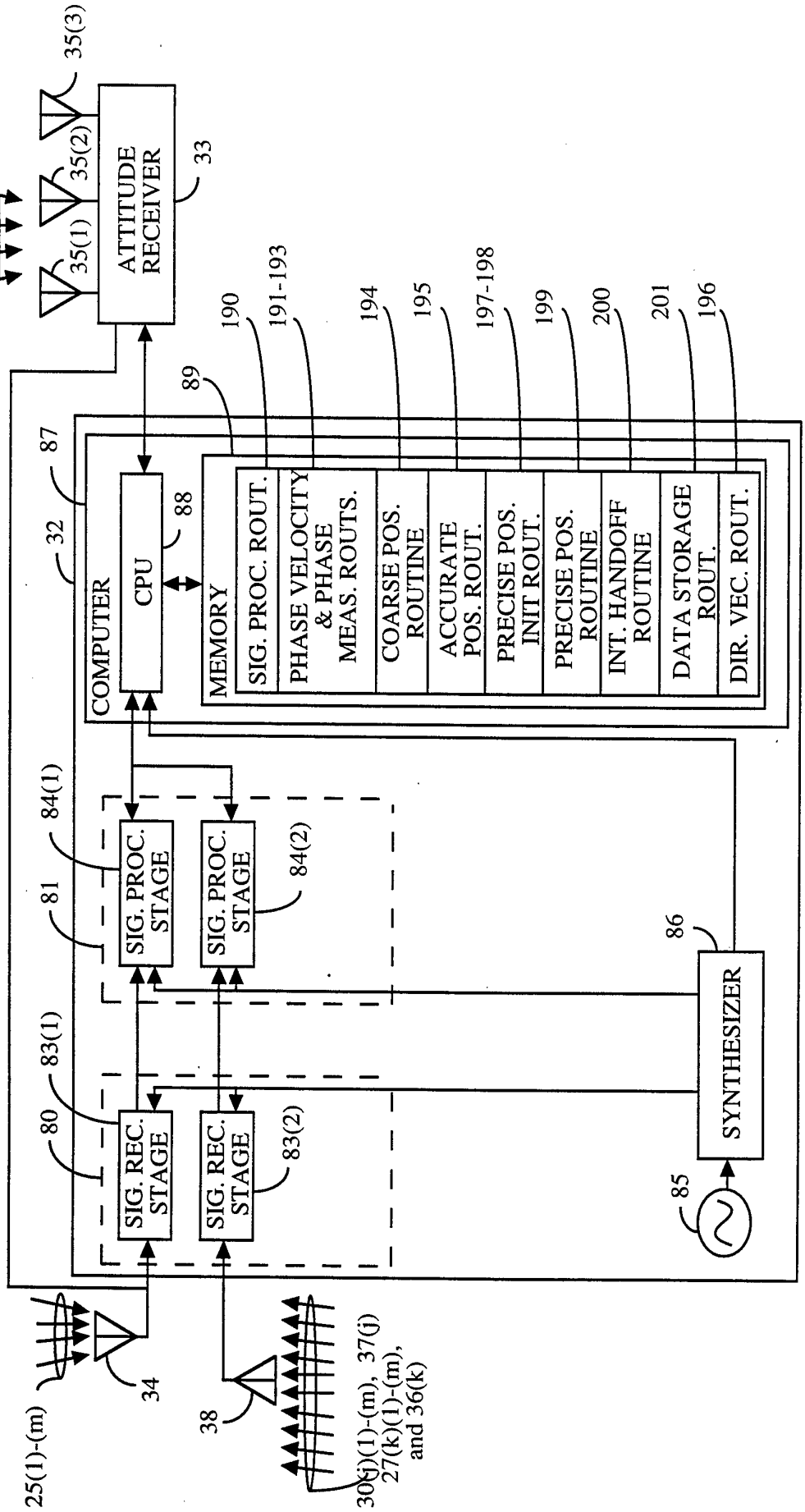
25(1)-(4)
35(3)
35(2)
35(1)
ATTITUDE RECEIVER
33
COMPUTER
32
CPU
88
87
89
MEMORY
190
SIG. PROC. ROUT.
191-193
PHASE VELOCITY & PHASE MEAS. ROUTS.
194
COARSE POS. ROUTINE
195
ACCURATE POS. ROUT.
197-198
PRECISE POS. INIT ROUT.
199
PRECISE POS. ROUTINE
200
INT. HANDOFF ROUTINE
201
DATA STORAGE ROUT.
196
DIR. VEC. ROUT.
84(1)
SIG. PROC. STAGE
84(2)
81
86
SYNTHESIZER
83(1)
80
SIG. REC. STAGE
83(2)
85
25(1)-(m)
34
38
30(j)(1)-(m), 37(j)
27(k)(1)-(m),
and 36(k)

Figure 20

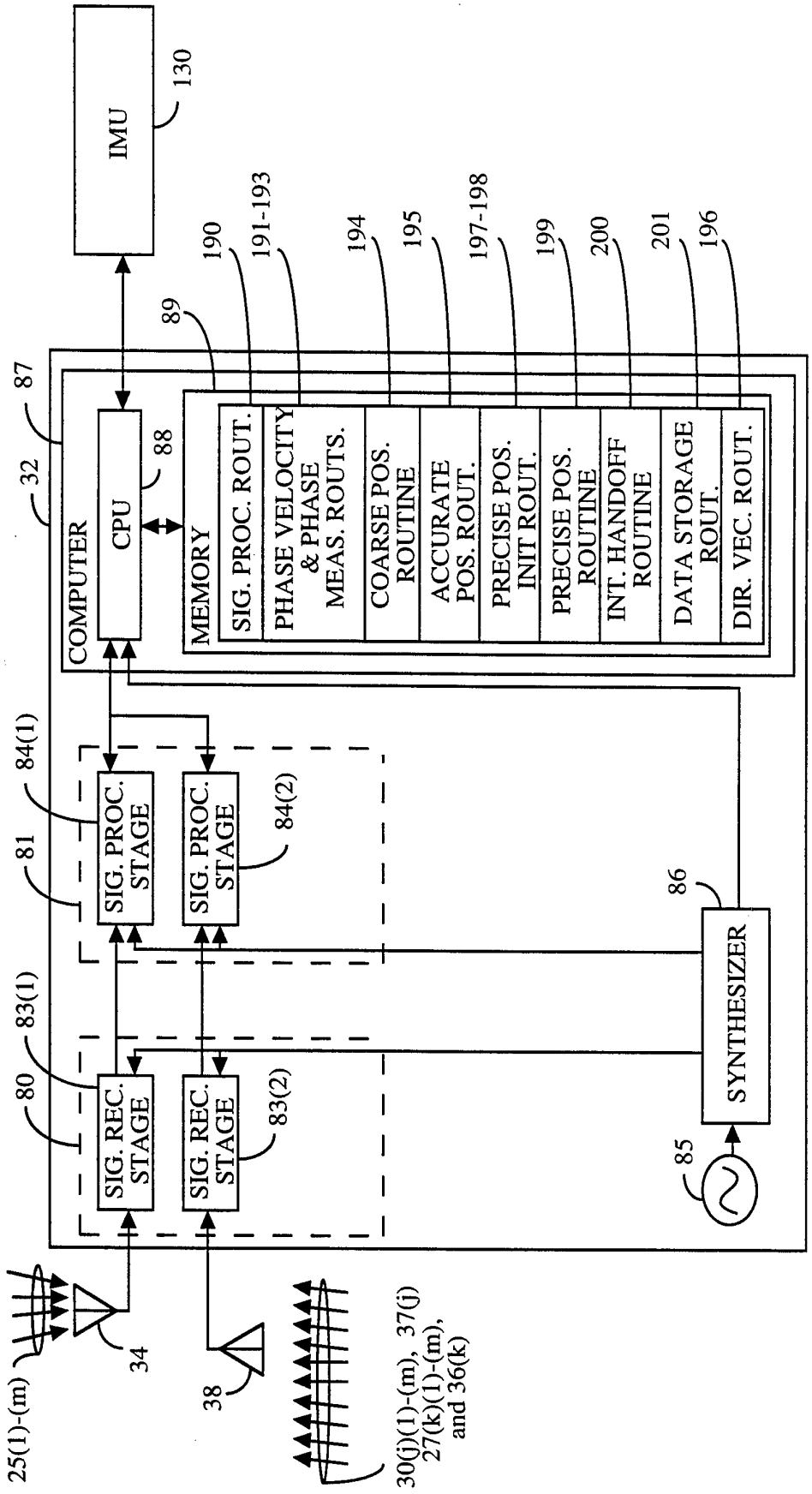
IMU
130
COMPUTER
32
87
CPU
88
MEMORY
89
SIG. PROC. ROUT.
190
PHASE VELOCITY & PHASE MEAS. ROUTS.
191-193
COARSE POS. ROUTINE
194
ACCURATE POS. ROUT.
195
PRECISE POS. INIT ROUT.
197-198
PRECISE POS. ROUTINE
199
INT. HANDOFF ROUTINE
200
DATA STORAGE ROUT.
201
DIR. VEC. ROUT.
196
SIG. PROC. STAGE
84(1)
SIG. PROC. STAGE
84(2)
81
SIG. REC. STAGE
83(1)
SIG. REC. STAGE
83(2)
80
SYNTHESIZER
86
85
25(1)-(m)
34
38
30(j)(1)-(m), 37(j)
27(k)(1)-(m),
and 36(k)

Figure 21

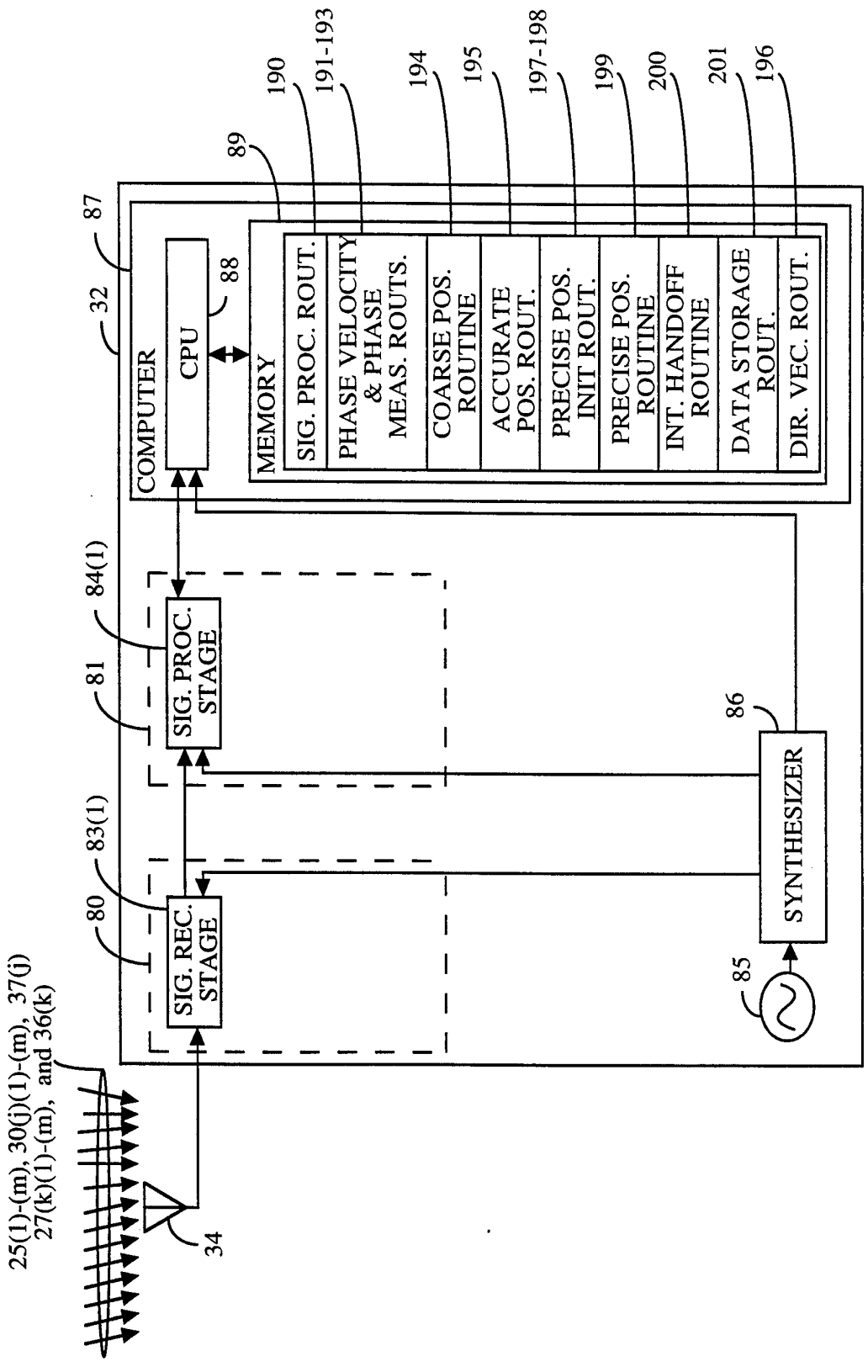
25(1)-(m), 30(j)(1)-(m), 37(j)
27(k)(1)-(m), and 36(k)
34
80
83(1)
81
84(1)
87
32
89
190
191-193
194
195
197-198
199
200
201
196
88
86
85
COMPUTER
CPU
MEMORY
SIG. PROC. ROUT.
PHASE VELOCITY & PHASE MEAS. ROUTS.
COARSE POS. ROUTINE
ACCURATE POS. ROUT.
PRECISE POS. INIT ROUT.
PRECISE POS. ROUTINE
INT. HANDOFF ROUTINE
DATA STORAGE ROUT.
DIR. VEC. ROUT.
SIG. REC. STAGE
SIG. PROC. STAGE
SYNTHESIZER

Figure 22

INTERNATIONAL SEARCH REPORT

International application No.
PCT/US94/10726

A. CLASSIFICATION OF SUBJECT MATTER

IPC(6) : G01S 5/02, 5/10, 1/02; H04B 7/185
US CL : 342/357, 385, 386, 394, 353, 458, 453
According to International Patent Classification (IPC) or to both national classification and IPC

B. FIELDS SEARCHED

Minimum documentation searched (classification system followed by classification symbols)

U.S. : 342/357, 385, 386, 394, 353, 458, 453, 394, 464

Documentation searched other than minimum documentation to the extent that such documents are included in the fields searched

Electronic data base consulted during the international search (name of data base and, where practicable, search terms used)

C. DOCUMENTS CONSIDERED TO BE RELEVANT

Category*	Citation of document, with indication, where appropriate, of the relevant passages	Relevant to claim No.
Y	KLEIN et al, "The Use of Pseudo-satellites for Improving GPS Performance ", GPS Papers published in Navigation, Vol. III, 1986, pgs. 135-146.	1-43
Y	STANSELL, Jr. "RTCM SC-104 Recommended Pseudolite Signal Specification", GPS Papers Published in Navigation, vol. III, 1986, pgs. 117,134.	1-43
Y	US, A, 4,754,465 (TRIMBLE) 28 JUNE 1988, Fig. 1	1-43
Y	US, A, 4,651,156 (MARTINEZ) 17 March 1987, Fig. 3	1-43
Y,P	US, A, 5,345,245 (ISHIKAWA ET AL) 06 September 1994, cols. 2-3	1-43

☐ Further documents are listed in the continuation of Box C. ☐ See patent family annex.

*	Special categories of cited documents:	"T"	later document published after the international filing date or priority date and not in conflict with the application but cited to understand the principle or theory underlying the invention
"A"	document defining the general state of the art which is not considered to be part of particular relevance	"X"	document of particular relevance; the claimed invention cannot be considered novel or cannot be considered to involve an inventive step when the document is taken alone
"E"	earlier document published on or after the international filing date	"Y"	document of particular relevance; the claimed invention cannot be considered to involve an inventive step when the document is combined with one or more other such documents, such combination being obvious to a person skilled in the art
"L"	document which may throw doubts on priority claim(s) or which is cited to establish the publication date of another citation or other special reason (as specified)	"&"	document member of the same patent family
"O"	document referring to an oral disclosure, use, exhibition or other means		
"P"	document published prior to the international filing date but later than the priority date claimed		

Date of the actual completion of the international search 18 JANUARY 1995	Date of mailing of the international search report 01 MAR 1995
Name and mailing address of the ISA/US Commissioner of Patents and Trademarks Box PCT Washington, D.C. 20231 Facsimile No. (703) 305-3230	Authorized officer GREGORY C. ISSING Telephone No. (703) 308-0467

Form PCT/ISA/210 (second sheet)(July 1992)*