May 2, 1944. A. C. OLSEN 2,347,961

MEANS FOR SECURING LATH TO STUDDING OR THE LIKE

Original Filed Feb. 4, 1939 2 Sheets-Sheet 1

Fig. 1.

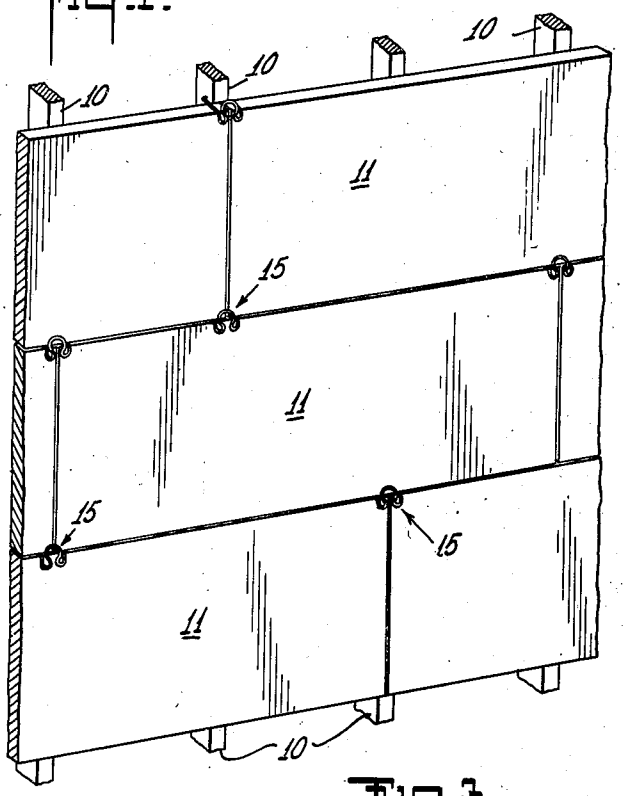

Fig. 2.

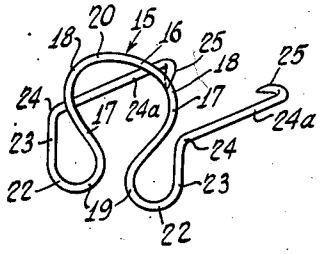

Fig. 4.

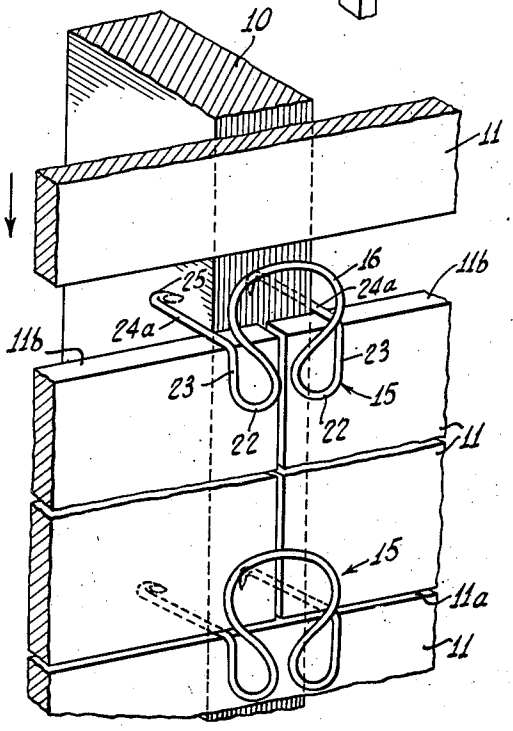

Fig. 3.

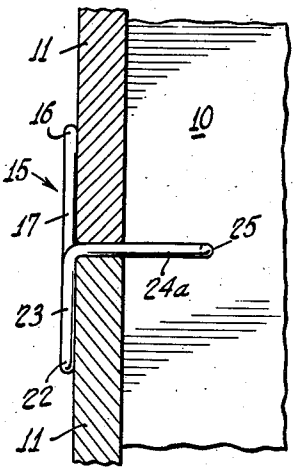

INVENTOR
ANDERS C. OLSEN.
BY
Samuel Steamman
ATTORNEY

May 2, 1944. A. C. OLSEN 2,347,961

MEANS FOR SECURING LATH TO STUDDING OR THE LIKE

Original Filed Feb. 4, 1939 2 Sheets-Sheet 2

Fig. 5.

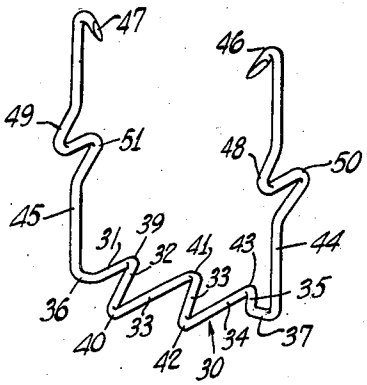

Fig. 6.

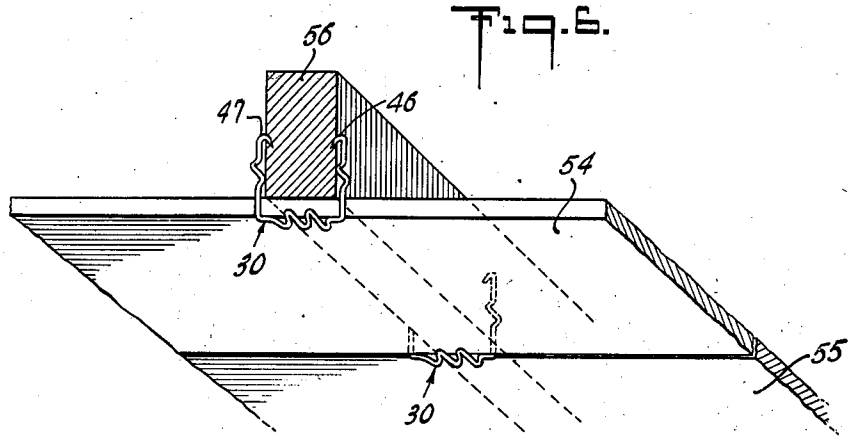

Fig. 7.

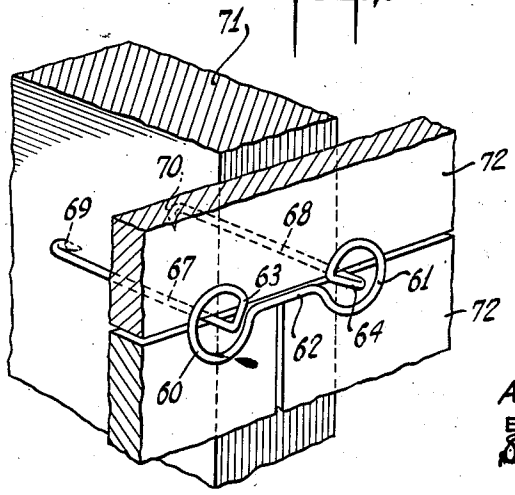

INVENTOR
ANDERS C. OLSEN.
BY
Samuel Steamman
ATTORNEY

Patented May 2, 1944

2,347,961

UNITED STATES PATENT OFFICE

2,347,961

MEANS FOR SECURING LATH TO STUDDING OR THE LIKE

Anders C. Olsen, Forest Hills, N. Y.

Continuation of application Serial No. 254,588, February 4, 1939. This application May 30, 1942, Serial No. 445,163

8 Claims. (Cl. 72—118)

This invention relates to building structures and particularly to wall and ceiling constructions. The present application is a continuation of my co-pending application Serial No. 254,588, filed February 4, 1939.

The invention more particularly relates to partitioning means for the interiors of buildings, which may be applied either to finished interiors or, as original installations, to the framework of buildings under construction.

In the interior construction of modern buildings the use of wood laths and metal lathing of various types is being rapidly superseded by the employment of panelling, such as panelling composed of plasterboard known as gypsum lath, and of relatively soft and porous fiberboard known as insulating lath, as a base for the application of the plaster to the wall and ceiling surfaces of the rooms. Such panelling lath has been found superior to the old wood lathing in ease of installation, in the elimination of excess plaster, and in permanence and durability.

Thus, where wood framing is employed, a more fire retarding construction may be insured by the application of gypsum lath or panelling, before applying the plaster to the interior walls and ceilings of such structures. With panelling which consists of fiberboard of the character described, a desired degree of heat insulation is obtained.

The principal object of the invention is to make the use of this panelling or lathing more convenient, economical and permanent. To that end, the present invention contemplates the provision of certain novel and improved means for affixing lathing panels to the studs, joists or other parts of the framing.

More particularly, it is an object of the invention to provide a novel clip or securing element which is adapted to engage margins of the lathing panels and firmly, but resiliently, hold them in position in relation to the studs, joists or other parts of the framing.

The clips constructed according to the invention are resilient and are adapted to provide a full floating structure, permitting certain relative movement of the lathing with relation to the studding or other framework so as to reduce the liability of the subsequently applied plaster to crack. With this floating or non-rigid securing feature, the joists or studs are free to shrink, warp or twist without setting up any strains on the lathing which would give rise to the formation of cracks in the subsequently applied plaster coatings.

Other objects and features of novelty will be apparent from the following specification, when read in connection with the accompanying drawings in which certain embodiments of the invention are illustrated.

In the drawings, Fig. 1 is a perspective view of a section of a partition or wall, wherein plastering lath panels are affixed to the studs by means of one form of clip embodying my invention;

Fig. 2 is a perspective view of one of the fastening clips shown in Fig. 1;

Fig. 3 is a detailed view, partly in cross-section and partly in elevation, of one of the clips and the panelling affixed thereby to a stud;

Fig. 4 is a perspective view showing the manner of affixing the lathing panels to a stud by means of the clips of Fig. 1;

Fig. 5 is a view showing another form of clip embodying the invention;

Fig. 6 is a fragmentary view showing the use of the clip of Fig. 5 for securing lathing panels to wood joists in the construction of a ceiling; and

Fig. 7 is a view showing still another form of clip embodying my invention, for affixing lathing panels to a stud or like framing member.

Referring to the drawings, the numeral 10 indicates the wood studs forming part of a wall or the joists forming part of a ceiling, and the numeral 11 indicates panels comprising the plastering base or lath for subsequently applied layers of plaster. These panels may be gypsum lath, fiber insulating lath, or other panelling lath. These panels may be of the usual commercial size, say 48" x 16", so as to enable adjacent laths to be butted along their transverse edges approximately along the center of the studs or joists, in accordance with standard practice.

The attachment of the panels to the studs, in accordance with my invention, is attained by means of resilient clips, one form of which is illustrated generally by the numeral 15 in Figs. 1 to 4. Referring to these figures, the clip there shown comprises a single piece of hard drawn wire bent along its central portion to form an open arcuate loop 16. The legs 17 of the loop may be curved sinuously as indicated at 18 and 19, although, if desired, these legs may be more or less straight and extend substantially parallel with one another from the upper part 20 of the loop to the outer ends of the legs. At the lower ends 19 of the legs, the wire is reversely bent at 22, the reverse bent portions 23 lying substantially in the same plane as the legs 17 of the loop. The reverse bent portions 23 extend to approximately

the middle of the length of the legs 17, as indicated at 24, at which point the ends of the wire are bent at right angles to the portions 23 to form arms 24a, the extremities of which are bent into the form of inwardly extending hooks 25 sharpened at their ends to provide prongs. The length of the wire is such that when bent into the form illustrated and described, the pronged hooks 25 will lie at a distance from the loop less than the depth of the studs, joists or other parts of the framework to which the panelling is to be secured by the clips and the distance between the arms 24a will be slightly greater than the width of the studs or joists. However, by reason of the flexibility of the wire of which the clip is formed, the spacing between the arms 24a and consequently between the pronged hooks 25, may be enlarged or diminished to accommodate the clips to studs, joists or other framing members of greater or less width, by exerting a pulling or pushing strain on the arms relative to one another, thereby spreading apart or bringing closer together the legs 24a and return bent portions 23, to the desired extent.

In using these clips for securing the lathing panels to the framework, as indicated in Fig. 4, the arms 24a are placed over an edge 11a of a panel that crosses the stud or over the edges 11b of a pair of adjacent panels that meet at the stud, and by slight inward pressure on the arms 24a the prongs at the extremities thereof are caused to bite into the surfaces of the studs or joists which lie in planes at right angles to the panelling, the inner surfaces of the loop 16 and the eyes formed by the lower ends 19 of the loops, the return bends 22 and the portions 23 firmly contacting the outer surface of the lathing panels, thereby pressing and maintaining the panels in contact with the outer edge of the stud or joist. The adjacent panel 11 may then be moved, in the direction indicated by the arrow into position in the space between the outer surface of the stud or joist and the upper or outer portion of the loops of the clips extending beyond the edges 11a or 11b of the panel or panels already held thereby to the stud, so that it also is forced into and held in engagement with the outer surface of the stud by that portion of the loops of the previously applied clips.

It will be observed that by reason of the construction of the arms 24a and the pronged hooks 25 thereof, any outward force exerted upon the panels or the clips will cause the prongs to become further embedded in the opposite side surfaces of the stud or joist. However, by reason of the resilient relationship between loop 16 and the embedded prongs of the arms 24a, any slight movements of the studs or joists which may be caused by warping, twisting, or by expansion or contraction, will not be transmitted to the panels. Thus, the panels secured by the clips to the studs or joists constitute a panelling surface that has a sufficiently free-floating character to prevent cracking in the superposed coatings or plaster, under the force of any such movement.

Another embodiment of the invention is illustrated in Figs. 5 and 6. As there shown, I provide a clip in which the base or panel seizing portion 30, corresponding generally in its function to the loop 16 and the eyes between the loop and the extensions 23 of the clip shown in Figs. 1 to 4, comprises portions of the wire bent in zigzag form, the branches 31 to 35 of the zigzag base extending in a common plane with one another and with terminal portions 36, 37 of the base. These terminal portions, extending in opposite directions respectively from the branches 31, 35, are positioned approximately midway the transverse dimension of the base. Consequently, the bends 39, 41 and 43 are positioned on one side of the portions 36, 37 and bends 40, 42 are positioned on the opposite side thereof, at substantially an equal distance, and the transverse distance between the series of bends 39, 41, 43 and the bends 40, 42 are such that they will be able to straddle the joint between two adjacent lathing panels and extend for a substantial distance, say ½" to 1", over the surfaces of the panels at each side of such joint. At the outer ends of the terminal portions 36, 37, the wire is bent at right angles to the plane of the base portion, forming arms 44, 45 terminating in pronged hooks 46, 47 respectively. The portions of the wire constituting the arms 44, 45 are bent intermediate the length thereof into one or more curved portions 48, 50 and 49, 51, the curved portions on each of the arms lying in planes substantially parallel to each other, i. e. parallel to the surfaces of the studs or joists into which the pronged hooks will be embedded in use. This formation of the wire, intermediate the lengths of the arms 44, 45 imparts a resilient quality to these arms which enhances the floating character of lathing panels held to a supporting structure by these clips, enabling the lathing panels to have substantial freedom of movement independently of the supporting structure.

In Fig. 6 I have shown the clip of Fig. 5 employed for securing several adjacent lathing panels 54, 55 to a joist 56, in forming a lathing surface of a ceiling. As indicated in this figure, the arms 44, 45 of the clip are positioned in the joint between the edges of the adjacent panels where these panels cross the joist 56, the prongs 46, 47 piercing the opposite sides of the joist and the transversely extending base portion 30 of the clip straddling the joint between the adjacent panels and bearing up against the margins thereof so as to hold the panels in engagement with the joist. By reason of the zigzag portions 48, 50 and 49, 51, any movement of the panels away from the bottom edge of the joist due to shrinkage etc., will be accommodated.

It will be understood, of course, that the clip shown in Figs. 5 and 6 may be employed equally as well for securing lathing panels to vertical studs, in much the same manner as is illustrated in Figs. 1 to 4.

Still another form of clip embodying my invention is illustrated in Fig. 7. In this form of clip, the wire is bent to provide a base portion comprising two circular loops or eyes 60, 61 connected by the intermediate portion of the wire 62. The wire is bent substantially radially towards the center of the eyes 60, 61, and a slight inclination to the eyes on one side thereof as indicated at 63, 64 respectively. From the outer ends of the bent portions 63, 64 the wire extends on the opposite side of the eyes to form the arms 67, 68 lying in a plane at right angles to the plane of the eyes and having pronged hooks 69, 70 at the extremities thereof for piercing opposite surfaces of a stud or joist 71 to which the lathing panels 72 are to be attached. In this form of clip, the resiliency which imparts the floating feature is due mainly to the fact that the radially extending portions 63, 64 are bent out of the

plane of the eyes 60, 61 in the direction opposite to that in which the arms 67, 68 extend.

With each of the several forms of clips embodying my invention as herein illustrated and described, the base portion of the clips lying on the outer surface of the lathing panels will serve also as a key for the plaster coatings. Moreover, the arms extending at right angles to the base of the clips for gripping engagement with the studs, joists or other framing members function automatically to space the adjacent edges of the lathing panels a distance equal to the gauge of the wire from which the clips are formed, thereby permitting the subsequently applied plaster coatings to key into these spaces.

I claim:

1. A clip for floatingly securing lathing panels to wood studding or the like, said clip comprising a pair of spaced arms having pronged hooks at the free ends thereof and an intermediate base portion connecting said arms, the arms lying substantially in a common plane intermediate opposite ends of the base portion, and the base portion lying in a plane at a right angle to the plane of said arms.

2. A clip for floatingly securing lathing panels to wood studding or the like, said clip comprising a base portion adapted to straddle the joint between adjacent panels and to bear resiliently against the same, said clip being formed with arms extending substantially in a common plane at a right angle to the plane of said base portion, said arms having pronged hooks at the outer ends thereof and being located intermediate opposite ends of the base portion.

3. A clip for floatingly securing lathing panels to wood studding or the like, comprising a base portion for bearing against margins of panelling mounted against said studding, and a pair of resiliently spaced arms lying in a common plane which extends substantially at a right angle to the plane of the base portion substantially midway the transverse dimension thereof, said arms having pronged hooks at the extremities thereof adapted to pierce opposite surfaces of the studding.

4. A clip for securing lathing panels to wood studding or the like, comprising a base portion for bearing against margins of panelling mounted against said studding, and resiliently formed arms having pronged hooks at the extremities thereof adapted to pierce opposite surfaces of the studding, said arms being bent to provide resiliency in the direction of the length of the arms.

5. A clip for floatingly securing lathing panels to wood studding or the like, said clip comprising a single piece of wire bent to form an intermediate base portion, the wire being bent at the ends of said base portion to provide a pair of resiliently spaced arms extending substantially in a common plane at a right angle to the base portion intermediate the transverse dimension of the base portion, the outer ends of the arms having pronged hooks.

6. A clip for floatingly securing lathing panels to wood studding or the like, comprising a single piece of wire bent sinuously along the intermediate portion thereof to provide a base, the wire being bent at the ends of said base portion to form arms extending at right angles thereto, said arms terminating in prongs.

7. A clip for floatingly securing lathing panels to wood studding or the like, said clip comprising a single piece of wire bent into the form of an open loop and into eyes connected to the outer ends of the loop, said loop and said eye portions providing a base portion for the clip adapted to bear against the surface of the lathing panels mounted on the studding or the like, the wire being bent at the outer ends of the eyes to provide arms extending at right angles to the plane of the base portion, the extremities of the arms having pronged hooks.

8. A clip for floatingly securing lathing panels to wood studding or the like, comprising a single piece of wire bent along its midportion to provide a pair of spaced substantially circular loops forming a base portion, the wire being bent radially near the end of each of said loops in a direction inclined from the plane of the loops, the ends of the wire extending from said radial portions in a direction substantially at right angles to the plane of the loops to provide spaced arms, the arms having pronged hooks at the outer extremities thereof.

ANDERS C. OLSEN.