Office de la Propriété Intellectuelle du Canada
Un organisme d'Industrie Canada

Canadian Intellectual Property Office
An agency of Industry Canada

CA 2804202 A1 2012/02/02

(21) 2 804 202

(12) DEMANDE DE BREVET CANADIEN
CANADIAN PATENT APPLICATION

(13) A1

(86) Date de dépôt PCT/PCT Filing Date: 2011/07/28
(87) Date publication PCT/PCT Publication Date: 2012/02/02
(85) Entrée phase nationale/National Entry: 2012/12/28
(86) N° demande PCT/PCT Application No.: US 2011/045704
(87) N° publication PCT/PCT Publication No.: 2012/016029
(30) Priorité/Priority: 2010/07/30 (US61/400,625)

(51) Cl.Int./Int.Cl. *B65D 71/44* (2006.01), *B65D 5/462* (2006.01), *B65D 67/02* (2006.01), *B65D 71/28* (2006.01)

(71) Demandeur/Applicant:
GRAPHIC PACKAGING INTERNATIONAL, INC., US

(72) Inventeur/Inventor:
SMALLEY, BRIAN, GB

(74) Agent: MACRAE & CO.

(54) Titre : PORTEUR POUR BOUTEILLES
(54) Title: CARRIER FOR BOTTLES

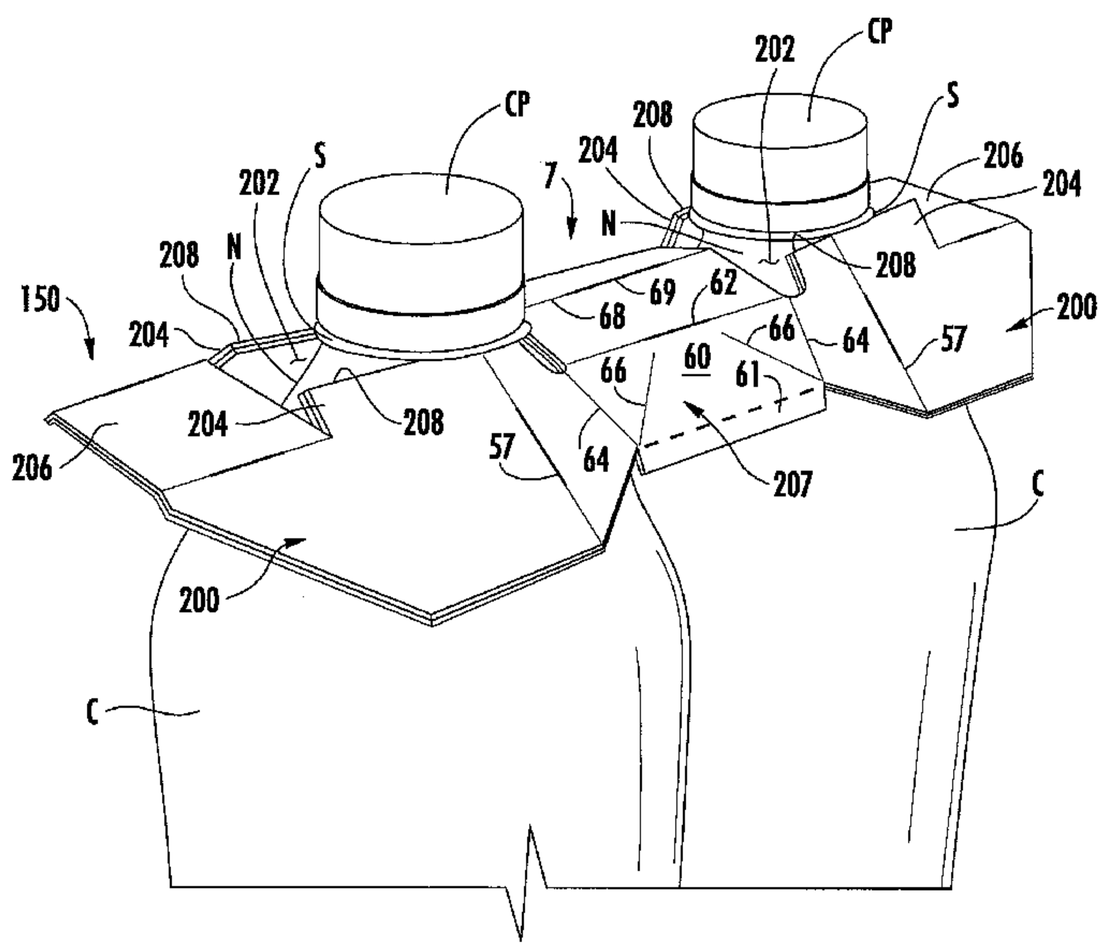

FIG. 2

(57) Abrégé/Abstract:
A carrier for holding a plurality of containers. The carrier can comprise a bottom panel, a top panel at least partially in face-to-face contact with the bottom panel, a handle comprising a bottom gripping portion in the bottom panel and a top gripping portion in the top panel, and at least one container receiver for at least partially receiving a respective container of the plurality of containers. The at least one container receiver is foldably connected to the handle.

(12) INTERNATIONAL APPLICATION PUBLISHED UNDER THE PATENT COOPERATION TREATY (PCT)

(19) World Intellectual Property Organization
International Bureau

(43) International Publication Date
2 February 2012 (02.02.2012)

WIPO | PCT

(10) International Publication Number
WO 2012/016029 A3

(51) International Patent Classification:
B65D 71/44 (2006.01) *B65D 67/02* (2006.01)
B65D 71/28 (2006.01) *B65D 5/462* (2006.01)

(21) International Application Number:
PCT/US2011/045704

(22) International Filing Date:
28 July 2011 (28.07.2011)

(25) Filing Language: English

(26) Publication Language: English

(30) Priority Data:
61/400,625 30 July 2010 (30.07.2010) US

(71) Applicant *(for all designated States except US)*: **GRAPHIC PACKAGING INTERNATIONAL, INC.** [US/US]; 814 Livingston Court, Marietta, GA 30067 (US).

(72) Inventor; and
(75) Inventor/Applicant *(for US only)*: **SMALLEY, Brian** [GB/GB]; Snicket Edge, 25 Westerleigh Road, Downend, Bristol BS16 6UY (GB).

(74) Agents: **CLAERBOUT, Andrew, N.** et al.; Womble Carlyle Sandridge & Rice, PLLC, P.O. Box 7037, Atlanta, GA 30357-0037 (US).

(81) Designated States *(unless otherwise indicated, for every kind of national protection available)*: AE, AG, AL, AM, AO, AT, AU, AZ, BA, BB, BG, BH, BR, BW, BY, BZ, CA, CH, CL, CN, CO, CR, CU, CZ, DE, DK, DM, DO, DZ, EC, EE, EG, ES, FI, GB, GD, GE, GH, GM, GT, HN, HR, HU, ID, IL, IN, IS, JP, KE, KG, KM, KN, KP, KR, KZ, LA, LC, LK, LR, LS, LT, LU, LY, MA, MD, ME, MG, MK, MN, MW, MX, MY, MZ, NA, NG, NI, NO, NZ, OM, PE, PG, PH, PL, PT, RO, RS, RU, SC, SD, SE, SG, SK, SL, SM, ST, SV, SY, TH, TJ, TM, TN, TR, TT, TZ, UA, UG, US, UZ, VC, VN, ZA, ZM, ZW.

[Continued on next page]

(54) Title: CARRIER FOR BOTTLES

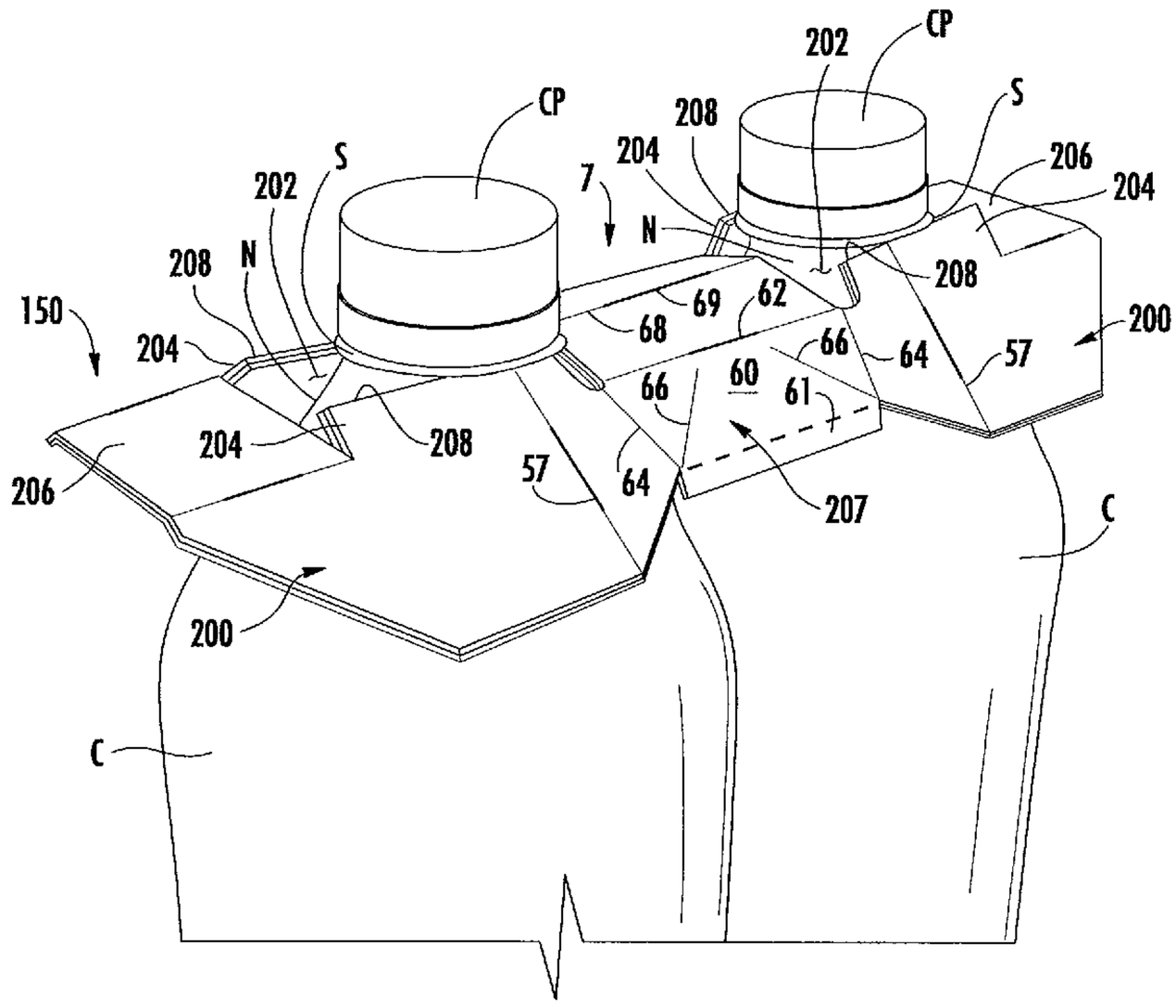

FIG. 2

[Continued on next page]

WO 2012/016029 A3

WO 2012/016029 A3

(84) Designated States *(unless otherwise indicated, for every kind of regional protection available)*: ARIPO (BW, GH, GM, KE, LR, LS, MW, MZ, NA, SD, SL, SZ, TZ, UG, ZM, ZW), Eurasian (AM, AZ, BY, KG, KZ, MD, RU, TJ, TM), European (AL, AT, BE, BG, CH, CY, CZ, DE, DK, EE, ES, FI, FR, GB, GR, HR, HU, IE, IS, IT, LT, LU, LV, MC, MK, MT, NL, NO, PL, PT, RO, RS, SE, SI, SK, SM, TR), OAPI (BF, BJ, CF, CG, CI, CM, GA, GN, GQ, GW, ML, MR, NE, SN, TD, TG).

Declarations under Rule 4.17:

— *as to applicant's entitlement to apply for and be granted a patent (Rule 4.17(ii))*

— *as to the applicant's entitlement to claim the priority of the earlier application (Rule 4.17(iii))*

Published:

— *with international search report (Art. 21(3))*

(88) Date of publication of the international search report: 12 July 2012

(57) Abstract: A carrier for holding a plurality of containers. The carrier can comprise a bottom panel, a top panel at least partially in face-to-face contact with the bottom panel, a handle comprising a bottom gripping portion in the bottom panel and a top gripping portion in the top panel, and at least one container receiver for at least partially receiving a respective container of the plurality of containers. The at least one container receiver is foldably connected to the handle.

CARRIER FOR BOTTLES

CROSS-REFERENCE TO RELATED APPLICATIONS

[0001] This application claims the benefit of U.S. Provisional Patent Application No. 61/400,625, filed July 30, 2010.

INCORPORATION BY REFERENCE

[0002] The disclosure of U.S. Provisional Patent Application No. 61/400,625, which was filed on July 30, 2010, is hereby incorporated by reference for all purposes as if presented herein in its entirety.

BACKGROUND OF THE DISCLOSURE

[0003] The present disclosure generally relates to packages or carriers for holding, displaying, and/or carrying containers.

SUMMARY OF THE DISCLOSURE

[0004] In general, one aspect of the disclosure is directed to a carrier for holding a plurality of containers. The carrier can comprise a bottom panel, a top panel at least partially in face-to-face contact with the bottom panel, a handle comprising a bottom gripping portion in the bottom panel and a top gripping portion in the top panel, and at least one container receiver for at least partially receiving a respective container of the plurality of containers. The at least one container receiver is foldably connected to the handle.

[0005] In another aspect, the disclosure is generally directed to a blank for forming a carrier for holding a plurality of containers. The blank can comprise a bottom panel, a top panel foldably connected to the bottom panel along a longitudinal fold line, and a bottom gripping portion in the bottom panel and a top gripping portion in the top panel. The bottom gripping portion is for being positioned relative to the top gripping portion to form a handle when the carrier is formed from the blank. The blank can further comprise at least one bottom container-receiving portion foldably connected to the bottom gripping portion in the bottom panel and at least one top container-receiving portion foldably connected to the top gripping portion in the top panel. The at least one bottom container-receiving portion can be positionable relative to the at least one top container-receiving portion to form at least one container receiver for at least partially receiving a respective container of the plurality of containers when the carrier is formed from the blank, the at least one container receiver being foldably connected to the handle.

[0006] In another aspect, the disclosure is generally directed to a method of forming a package comprising a carrier and a plurality of containers. The method can comprise obtaining a carrier blank comprising a bottom panel, a top panel foldably connected to the bottom panel along a longitudinal fold line, a bottom gripping portion in the bottom panel, a top gripping portion in the top panel, at least one bottom container-receiving portion foldably connected to the bottom gripping portion in the bottom panel, and at least one top container-receiving portion foldably connected to the top gripping portion in the top panel. The method can further comprise forming a handle and at least one container receiver by folding the top panel along the longitudinal fold line into face-to-face contact with the bottom panel so that the top gripping portion is substantially in face-to-face contact with the bottom gripping portion to form the handle and the at least one bottom container-receiving portion is in face-to-face contact with the at least one top container-receiving portion to form the at least one container receiver. The method can further comprise inserting at least a portion of a container of the plurality of containers into the at least one container receiver.

[0007] Those skilled in the art will appreciate the above stated advantages and other advantages and benefits of various additional embodiments reading the following detailed description of the embodiments with reference to the below-listed drawing figures. It is within the scope of the present disclosure that the above-discussed aspects be provided both individually and in various combinations.

BRIEF DESCRIPTION OF THE DRAWINGS

[0008] According to common practice, the various features of the drawings discussed below are not necessarily drawn to scale. Dimensions of various features and elements in the drawings may be expanded or reduced to more clearly illustrate the embodiments of the disclosure.

[0009] Fig. 1 is a plan view of the interior side of a blank according to one exemplary embodiment of the disclosure.

[0010] Fig. 2 is a side perspective view of the erected carrier with containers according to the exemplary embodiment of the disclosure.

[0011] Fig. 3 is a top perspective view showing one end of the carrier.

[0012] Fig. 4 is a side view of the carrier being carried.

[0013] Corresponding parts are designated by corresponding reference numbers throughout the drawings.

DETAILED DESCRIPTION OF THE EXEMPLARY EMBODIMENTS

[0014] The present disclosure generally relates to carriers, constructs, sleeves, cartons, or the like, and packages for holding and displaying containers such as jars, bottles, cans, etc. The containers can be used for packaging food and beverage products, for example. The containers can be made from materials suitable in composition for packaging the particular food or beverage item, and the materials include, but are not limited to, plastics such as PET, LDPE, LLDPE, HDPE, PP, PS, PVC, EVOH, and Nylon; and the like; aluminum and/or other metals; glass; or any combination thereof.

[0015] Carriers according to the present disclosure can accommodate containers of numerous different shapes. For the purpose of illustration and not for the purpose of limiting the scope of the disclosure, the following detailed description describes beverage product containers (e.g., plastic containers) at least partially disposed within the carrier embodiments. In this specification, the terms "lower," "bottom," "upper," and "top" indicate orientations determined in relation to fully erected carriers or packages.

[0016] The present embodiments are addressed to carriers or packages for attachment to and accommodation of containers. A carrier or package 150 is illustrated in its erected state in Figs. 2-4, in which it is attached to containers C. In the illustrated embodiments the containers C are illustrated as two beverage containers each having a top portion generally comprising an upper neck portion N (Fig. 2) , a cap CP, and an annular shoulder S below the cap. Less than or more than two containers C can be held in the carrier 150, and the containers can be otherwise sized and shaped without departing from the disclosure. The carrier 150 includes a handle 7 (Fig. 2) for grasping and carrying a central portion of the carrier and two container receivers 200 foldably connected to the handle 7 at respective ends of the handle. The carrier could have more or less than two container receivers without departing from the disclosure. Further, the carrier 150 could have one or more container receivers that are not foldably connected to the handle 7 without departing from the disclosure.

[0017] Fig. 1 is a plan view of an interior side 3 of a blank 8 used to form the carrier or package 150. The blank 8 has a longitudinal axis L1 and a lateral axis L2. The blank 8 comprises a bottom panel 10 foldably connected to a top panel 20 at a longitudinal fold line 21. One or more cuts can be included in the longitudinal fold line 21, or other fold lines, to facilitate folding along the fold

lines. Any number of cuts may be formed in any of the fold lines, and the number and length of the cuts may be selected according to, for example, the gauge and/or the stiffness of the material used to form the blank 8. The fold lines alternatively may be formed by other methods (e.g., crease lines without cuts) without departing from the disclosure.

[0018] In Fig. 1, glue areas 9 for securing the bottom panel 10 to the top panel 20 are shown extending longitudinally on the interior surface of the bottom panel 10. Alternatively, the glue areas can have any shape or orientation and can be applied to the bottom panel 10, the top panel 20, or both.

[0019] According to the illustrated embodiment, the bottom panel 10 includes two bottom container-receiving portions 12 and a bottom gripping portion 14. A bottom opening 30 extends between two bottom retainer flaps 32 in each bottom container-receiving portion 12, and each bottom opening 30 is shaped and sized to receive the upper neck portion N of a container C (Fig. 2) that is to be at least partially accommodated within the carrier 150. The bottom openings 30 can extend generally in the respective bottom container-receiving portion 12 from the bottom gripping portion 14 to a respective bottom end portion 34. The blank 8 can comprise more or less than two bottom container-receiving portions 12 and bottom openings 30 without departing from the disclosure. The bottom retainer flaps 32 each can be defined by a widened, laterally-extending portion 31 of the bottom opening 30, a lateral cut line 33, and an oblique bottom edge 35. In the illustrated embodiment, the bottom edges 35 taper from the lateral portion 31 to the respective lateral cut line 33 for resisting translation of a container C received in the bottom opening 30 away from the bottom gripping portion 14.

[0020] According to the exemplary embodiment, each of the bottom end portions 34 can be defined by longitudinal fold lines 36 and the lateral cut lines 33. As shown in Fig. 1, the fold lines 36 can be lines of perforations; however, any line, such as a crease or a tear line, can be used without departing from the disclosure. Side fold lines 37 can extend from the bottom edges 35 of the bottom retainer flaps 32 to the edges of the bottom container-receiving portions 12 for allowing the bottom container-receiving portions to conform at least partially around the curved shape of the containers C. In the illustrated embodiment, the bottom container-receiving portions 12 include oblique edges extending from a longitudinal edge or the longitudinal fold line 21 to a lateral edge or bottom gripping portion 14. Alternatively, the bottom container-receiving portions 12 can have any shape without departing from the disclosure.

[0021] As shown in Fig. 1, the bottom gripping portion 14 can be narrower than the bottom container-receiving portions 12 and includes bottom side panels 40, each defined by a longitudinal fold line 42 and connected to the bottom container-receiving portions 12 by oblique fold lines 44. An oblique score or crease 46 extends from each of the outer corners of the bottom side panels 40 for allowing deformation of the side panels around a user's fingers when gripping the handle 7. The bottom gripping portion 14 further includes a longitudinal fold line 48 extending generally along the longitudinal axis of the bottom panel 10 between longitudinal extensions 39 of the openings 30.

[0022] In the illustrated embodiment, the top panel 20 is similar in shape and functionality as the bottom panel 10. As shown in Fig. 1, the top panel 20 includes two top container-receiving portions 22 and a top gripping portion 24. A top opening 50 extends between two top retainer flaps 52 in each top container-receiving portion 22, and each top opening 50 is shaped and sized to be generally aligned with a respective bottom opening 30 in the bottom panel 10 for receiving the upper neck portion N of a container C (Fig. 2). The top openings 50 can extend generally in the respective top container-receiving portion 22 from the top gripping portion 24 to a respective top end portion 54. The blank 8 can comprise more or less than two top container-receiving portions 22 and top openings 50 without departing from the disclosure. The top retainer flaps 52 each can be defined by a widened, laterally-extending portion 51 of the top opening 50, a lateral cut line 53, and an oblique top edge 55. In the illustrated embodiment, the top edges 55 taper from the lateral portion 51 to the lateral cut line 53 for resisting translation of a container C received in the top opening 50 away from the top gripping portion 24.

[0023] According to the exemplary embodiment, each of the top end portions 54 can be defined by longitudinal fold lines 56 and the lateral cut lines 53. As shown in Fig.1, the fold lines 56 can be crease lines with centrally-disposed cut lines; however, any line, such as a crease or a tear line, can be used without departing from the disclosure. Side fold lines 57 can extend from the top edges 55 of the top retainer flaps 52 to the edges of the top container-receiving portions 22 for allowing the top container-receiving portions to conform at least partially around the curved shape of the containers C. In the illustrated embodiment, the top container-receiving portions 22 each have a generally similar or identical shape as the bottom container-receiving portions 12 so that the edges of the top container-receiving portions 22 generally align with the edges of the bottom container-receiving portions 12 when the carrier 150 is formed. Alternatively, the container-receiving portions 12, 22 can be shaped differently or can have any shape without departing from the disclosure.

[0024] As shown in Fig. 1, the top gripping portion 24 of the top panel 20 is narrower than the top container-receiving portions 22 and includes top side panels 60, each defined by a longitudinal fold line 62 and connected to the top container-receiving portions 22 by oblique fold lines 64. An oblique score or crease 66 extends from each of the outer corners of the top side panels 60 for allowing deformation of the side panels around a user's fingers when gripping the handle 7. The top gripping portion 24 optionally includes a comfort flap 61 connected to each of the top side panels 60 by a longitudinal fold line 63. The top gripping portion 24 can further include a longitudinal fold line 68 extending generally along the longitudinal axis of the top panel 20 between the top openings 50. A cut line 69 can extend along a central portion of the longitudinal fold line 68 and is for being generally aligned with the fold line 48 of the gripping portion 14 when the carrier 150 is formed.

[0025] Handle features of the blank 8 for forming the handle 7 include the bottom gripping portion 14 of the bottom panel 10 and the top gripping portion 24 of the top panel 20. The blank 8 could have other handle features without departing from the disclosure. Additionally, the blank 8 could have more than one bottom gripping portion in the bottom panel 10 and more than one top gripping portion in the top panel 20 for forming more than one handle in the carrier 150.

[0026] An exemplary method of erecting the carrier 150 is discussed in detail below. At various stages in the erecting, respective portions of the blank 8 are mounted to one another in any suitable manner. For example, at various stages of the erecting process, glue or other adhesive material can be applied at various portions of the blank 8. For example, the adhesive material may be present where appropriate surfaces of the blank are in face-to-face contact. Depending upon the amount and/or type of adhesive material or other fastening mechanisms used, each of the face-to-face contacts described in this disclosure may be more generally referred to as the respective features being in substantially face-to-face contact or at least partially in face-to-face contact.

[0027] The erected carrier 150 illustrated in Figs. 2-4 is formed by applying glue or any suitable adhesive to the glue areas 9 and/or other areas and folding the top panel 20 and/or the bottom panel 10 about the longitudinal fold line 21 so that the interior surface of the top panel is in face-to-face contact with the interior surface of the bottom panel 10 to secure or mount the top panel to the bottom panel. In the illustrated embodiment, each of the bottom container-receiving portions 12 of the bottom panel 10 is secured to a respective top container-receiving portion 22 of the top panel 20 to form respective container receivers 200. The bottom openings 30 and bottom retainer flaps 32 of the bottom panel are generally aligned with corresponding top openings 50 and top retainer flaps 52 of the top panel to form respective openings 202 and retainer flaps 204 in the

carrier 150. Each of the bottom end portions 34 of the bottom panel 10 is in face-to-face contact with a corresponding top end portion 54 of the top panel 20, forming an end panel 206 of the carrier 150. Further, the top gripping portion 24 of the top panel 20 is in face-to-face contact with and secured to the bottom gripping portion 14 of the bottom panel 10 to form the handle 7, and the top side panels 60 are overlapped with the corresponding bottom side panels 40 to form respective side panels 207. The two-ply carrier 150, including overlapped and adhered container-receiving portions 12, 22 and gripping portions 14, 24, provides a reinforced carrier for helping to withstand substantial loading without tearing, bending, or otherwise weakening of the carrier when the handle 7 is grasped to carry the containers C.

[0028] The carrier 150 can then be placed onto the containers C such that the neck portion N of each of the containers is respectively received in the openings 202 and the retainer flaps 204 are respectively upwardly folded. Particularly, the retainer flaps 204 pivot outwardly as the cap CP passes through the opening 202 until the shoulder S passes through. The retainer flaps 204 then can pivot inwardly so the edges 208 of the retainer flaps 204 engage the shoulder S or other suitable feature at opposite sides of the containers C to at least partially provide a retaining force for holding the containers in the carrier (Fig. 3). The bottom panel 10 and the top panel 20 can fold along the generally aligned fold lines 48, 68; 42, 62; 44, 64; 46, 66; 37, 57 to at least partially conform to the shape of containers C when retainer flaps 204 pivot upwardly. Each of the container receivers 200 can be sloped on either side of the respective opening 202 and end panel 206 so that the retainer flaps 204 are directed generally inwardly and upwardly under the shoulder S of the container C received in the container receiver 200. Also, the cut 69 in the top panel 20 can partially split to generally accommodate folding and/or deformation of the fold line 48 in the bottom panel 10, and the longitudinal extensions 39 of the openings 30 in the bottom panel 10 can generally accommodate folding and/or deformation of the fold line 68 in the top panel 20.

[0029] A user can carry the assembled package and containers by gripping the handle 7 with a thumb on one side of the handle and a finger on the other side of the handle as shown in Fig. 4. Lifting the carrier by the handle 7 deforms the gripping portions 14, 24 at least at fold lines 42/62, 44/64, 46/66, and 48/68 to conform at least partially to the user's fingers. The retainer flaps 204 are pivoted upwardly so the edges 208 engage an underside of the respective shoulders S of the containers C, lifting the containers with the carrier. As the carrier 150 is lifted, the carrier can bend in the handle 7 so that the container receivers 200 pivot downwardly and the bottoms of the containers C pivot toward one another (Fig. 4). The comfort flaps 61 can be folded downwardly about the respective fold lines 63 to protect the user from the outer edges of the corresponding side

panels 40. Alternatively, the handle 7 can be gripped differently, or a different handle configuration can be used without departing from the disclosure.

[0030] In the illustrated embodiment, the carrier 150 is retained on the containers C by the engagement of the retainer flaps 204 with portions of the shoulders S of the containers. The edges 208 of the flaps 204 engage an underside of a respective shoulder S at opposite sides of each container to apply a retention force that tends to prevent withdrawal of each container from the carrier. The retention force from the engagement of the retaining edges 204 with the shoulder S creates an upward bias force that retains the container C and resists removal of the containers. In addition, the narrowing of openings 202 toward the end panels 206 can bias the containers toward the handle 7. In one embodiment, the upward bias force may be overcome or eliminated such as by tearing or manipulation of the carrier 150, in order to withdraw the container C from the carrier. The containers C can be otherwise retained in the carrier without departing from the disclosure.

[0031] According to the exemplary embodiment, a container C can be removed from the carrier 150 by squeezing the container receivers 200 at one end of the carrier inwardly and downwardly to pivot the retainer flaps 204 away from the shoulder S. The container C can then be pulled downwardly so that the shoulder S and cap CP pass through the opening 202.

[0032] Alternatively, a container C can be removed from the carrier 150 by tearing away the adjacent end panel 206 from the carrier 150. Particularly, the end portions 34, 54 of the container-receiving portions 12, 22 forming the end panel 206 can be torn along the respective lines 36, 56. The user can reach into the opening 202 with a finger and pull upwardly and outwardly on the end panel 206 to tear it along lines 36, 56. The remaining portions of the container-receiving portions 12, 22 can then pivot about respective fold lines 44, 64 to allow the retainer flaps 204 to move apart. The container C can then easily slide out of the opening 202. The carrier 150 can have other dispensing features to remove the containers C from the carrier 150 without departing from the disclosure.

[0033] In the illustrated embodiment, the container receivers 200 are foldably connected to the handle 7 at fold lines 44, 64. The foldable connection between the container receivers 200 and the handle 7 allows the container receivers to flex when the carrier is lifted by grasping the handle. The container receivers 200 could be otherwise shaped, arranged, and/or configured without departing from the disclosure. Further, the carrier 150 could have additional container receivers that are foldably connected to a respective one of the container receivers 200 shown to accommodate additional containers C without departing from the disclosure. Also, the carrier 150

could have a line of weakness for separating a respective container receiver 200 from the carrier to facilitate dispensing of the containers C from the carrier.

[0034] In general, the blank may be constructed from paperboard having a caliper so that it is heavier and more rigid than ordinary paper. The blank can also be constructed of other materials, such as cardboard, or any other material having properties suitable for enabling the carton to function at least generally as described above.

[0035] The blank can be coated with, for example, a clay coating. The clay coating may then be printed over with product, advertising, and other information or images. The blanks may then be coated with a varnish to protect information printed on the blanks. The blanks may also be coated with, for example, a moisture barrier layer, on either or both sides of the blanks. The blanks can also be laminated to or coated with one or more sheet-like materials at selected panels or panel sections.

[0036] The above embodiments may be described as having one or panels adhered together by glue. The term "glue" is intended to encompass all manner of adhesives commonly used to secure paperboard carton panels in place, and the adhesive material can be replaced by, or supplemented with any suitable fastening devices.

[0037] The term "line" as used herein includes not only straight lines, but also other types of lines such as curved, curvilinear or angularly displaced lines.

[0038] In accordance with the exemplary embodiments, a fold line can be any substantially linear, although not necessarily straight, form of weakening that facilitates folding therealong. More specifically, but not for the purpose of narrowing the scope of the present disclosure, fold lines include: a score line, such as lines formed with a blunt scoring knife, or the like, which creates a crushed or depressed portion in the material along the desired line of weakness; a cut that extends partially into a material along the desired line of weakness, and/or a series of cuts that extend partially into and/or completely through the material along the desired line of weakness; and various combinations of these features. In situations where cutting is used to create a fold line, typically the cutting will not be overly extensive in a manner that might cause a reasonable user to incorrectly consider the fold line to be a tear line.

[0039] As an example, a tear line can include: a slit that extends partially into the material along the desired line of weakness, and/or a series of spaced apart slits that extend partially into and/or completely through the material along the desired line of weakness, or various combinations of these features. As a more specific example, one type tear line is in the form of a series of spaced

apart slits that extend completely through the material, with adjacent slits being spaced apart slightly so that a nick (e.g., a small somewhat bridging-like piece of the material) is defined between the adjacent slits for typically temporarily connecting the material across the tear line. The nicks are broken during tearing along the tear line. The nicks typically are a relatively small percentage of the tear line, and alternatively the nicks can be omitted from or torn in a tear line such that the tear line is a continuous cut line. That is, it is within the scope of the present disclosure for each of the tear lines to be replaced with a continuous slit, cut line, or the like. For example, a cut line can be a continuous slit or could be wider than a slit without departing from the present disclosure.

[0040] The foregoing description of the disclosure illustrates and describes various embodiments. As various changes could be made in the above construction without departing from the scope of the disclosure, it is intended that all matter contained in the above description or shown in the accompanying drawings shall be interpreted as illustrative and not in a limiting sense. Furthermore, the scope of the present disclosure covers various modifications, combinations, alterations, etc., of the above-described embodiments that are within the scope of the claims. Additionally, the disclosure shows and describes only selected embodiments of the disclosure, but the disclosure is capable of use in various other combinations, modifications, and environments and is capable of changes or modifications within the scope of the inventive concept as expressed herein, commensurate with the above teachings, and/or within the skill or knowledge of the relevant art. Furthermore, certain features and characteristics of each embodiment may be selectively interchanged and applied to other illustrated and non-illustrated embodiments of the disclosure.

WHAT IS CLAIMED IS:

1. A carrier for holding a plurality of containers, the carrier comprising:

a bottom panel;

a top panel at least partially in face-to-face contact with the bottom panel;

a handle comprising a bottom gripping portion in the bottom panel and a top gripping portion in the top panel;

at least one container receiver for at least partially receiving a respective container of the plurality of containers, the at least one container receiver is foldably connected to the handle.

2. The carrier of claim 1, wherein the at least one container receiver comprises a bottom container-receiving portion in the bottom panel and a top container-receiving portion in the top panel, the bottom container-receiving portion is in face-to-face contact with the top container-receiving portion.

3. The carrier of claim 2, wherein the at least one container receiver at least partially defines an opening and comprises a first retainer flap and an opposing second retainer flap disposed adjacent the opening, each of the first retainer flap and the second retainer flap comprising an edge for engaging a shoulder of a container of the plurality of containers.

4. The carrier of claim 3, further comprising at least one end panel, wherein the at least one end panel is foldably connected to the at least one container receiver, and the at least one end panel is disposed generally opposite to the handle.

5. The carrier of claim 4, wherein the at least one end panel comprises a bottom end portion in the bottom panel and a top end portion in the top panel.

6. The carrier of claim 5, wherein the top end portion is connected to the top container-receiving portion along two top longitudinal fold lines, and the bottom end portion is connected to the bottom container-receiving portion along two bottom longitudinal fold lines.

7. The carrier of claim 5, wherein the top end portion is connected to the top container-receiving portion along two top longitudinal tear lines, the bottom end portion is connected to the bottom container-receiving portion along two bottom longitudinal tear lines, and the bottom longitudinal tear lines are generally aligned with the respective top longitudinal tear lines.

8. The carrier of claim 4, wherein the opening comprises a widened lateral portion at least partially defined by the handle, and the opening is further defined by an edge of an adjacent end panel of the plurality of end panels.

9. The carrier of claim 8, wherein each of the first retainer flap and the second retainer flap is at least partially defined by the lateral portion of the opening and a cut line separating the respective first or second retainer flap from the at least one end panel.

10. The carrier of claim 4, wherein:

the handle comprises a first bottom side panel and an opposing second bottom side panel foldably connected to the bottom gripping portion of the handle;

the handle comprises a first top side panel and an opposing second top side panel foldably connected to the top gripping portion of the handle;

the first top side panel and the second top side panel are in substantially face-to-face contact with the respective first bottom side panel and second bottom side panel;

the bottom container-receiving portion of the at least one container receiver is foldably connected to the first bottom side panel and the second bottom side panel; and

the top container-receiving portion of the at least one container receiver is foldably connected to the first top side panel and the second top side panel.

11. The carrier of claim 3, wherein

the handle comprises a first bottom side panel and an opposing second bottom side panel foldably connected to the bottom gripping portion of the handle;

the handle comprises a first top side panel and an opposing second top side panel foldably connected to the top gripping portion of the handle; and

the first top side panel and the second top side panel are in substantially face-to-face contact with the respective first bottom side panel and second bottom side panel.

12. The carrier of claim 11, wherein the bottom container-receiving portion is foldably connected to the first bottom side panel and the second bottom side panel, and the top container-receiving portion is foldably connected to the first top side panel and the second top side panel.

13. The carrier of claim 12, wherein each of the bottom container-receiving portion and the top container receiving portion comprises a first side fold line and a second side fold line, the first side fold line extending from the edge of the first retainer flap to an edge of the respective bottom and top panels, and the second side fold line extending from the edge of the second

retainer flap to an edge of the respective bottom and top panels, the first side fold line of the bottom panel is generally aligned with the first side fold line of the top panel, and the second side fold line of the bottom panel is generally aligned with the second side fold line of the top panel, and each of the first bottom side panel, the second bottom side panel, the first top side panel, and the second top side panel comprises an oblique score.

14. A blank for forming a carrier for holding a plurality of containers, the blank comprising:

a bottom panel;

a top panel foldably connected to the bottom panel along a longitudinal fold line;

a bottom gripping portion in the bottom panel and a top gripping portion in the top panel, the bottom gripping portion for being positioned relative to the top gripping portion to form a handle when the carrier is formed from the blank;

at least one bottom container-receiving portion foldably connected to the bottom gripping portion in the bottom panel and at least one top container-receiving portion foldably connected to the top gripping portion in the top panel, the at least one bottom container-receiving portion being positionable relative to the at least one top container-receiving portions to form at least one container receiver for at least partially receiving a respective container of the plurality of containers when the carrier is formed from the blank, the at least one container receiver being foldably connected to the handle.

15. The blank of claim 14, wherein the at least one bottom container-receiving portion at least partially defines a bottom opening and the at least one top container-receiving portion at least partially defines a top opening.

16. The blank of claim 15, wherein:

the at least one bottom container-receiving portion comprises a first bottom retainer flap and an opposing second bottom retainer flap disposed adjacent the bottom opening, each of the first bottom retainer flap and the second bottom retainer flap comprising a bottom edge for engaging a shoulder of a container of the plurality of containers; and

the at least one top container-receiving portion comprises a first top retainer flap and an opposing second top retainer flap disposed adjacent the top opening, each of the first top retainer flap and the second top retainer flap comprising a top edge for engaging a shoulder of a container of the plurality of containers.

17. The blank of claim 16, wherein:

the bottom panel comprises a bottom end portion foldably connected to the at least one bottom container-receiving portion generally opposite to the handle; and

the top panel comprises a top end portion foldably connected to the at least one top container-receiving portion generally opposite to the handle.

18. The blank of claim 17, wherein:

the at least one bottom container-receiving portion is connected to the bottom end portion along two bottom longitudinal fold lines; and

the at least one top container-receiving portion is connected to the top end portion along two top longitudinal fold lines.

19. The blank of claim 17, wherein:

the at least one bottom container-receiving portion is connected to the bottom end portion along two bottom longitudinal tear lines;

the at least one top container-receiving portion is connected to the top end portion along two top longitudinal tear lines; and

the bottom longitudinal tear lines are for being generally aligned with the respective top longitudinal tear lines when the carrier is formed from the blank.

20. The blank of claim 17, wherein:

the bottom opening comprises a widened lateral portion at least partially defined by the bottom gripping portion and an edge of the bottom end portion; and

the top opening comprises a widened lateral portion at least partially defined by the top gripping portion and an edge of the top end portion.

21. The blank of claim 20, wherein:

each of the first bottom retainer flap and the second bottom retainer flap is at least partially defined by the lateral portion of the bottom opening and a cut line separating the respective first or second bottom retainer flap from the respective bottom end portion; and

each of the first top retainer flap and the second top retainer flap is at least partially defined by the lateral portion of the top opening and a cut line separating the respective first or second top retainer flap from the respective top end portion.

22. The blank of claim 16, wherein:

the bottom panel comprises a first bottom side panel and an opposing second bottom side panel foldably connected to the bottom gripping portion;

the top panel comprises a first top side panel and an opposing second top side panel foldably connected to the top gripping portion; and

the first top side panel and the second top side panel are for being positioned in substantially face-to-face contact with the respective first bottom side panel and second bottom side panel when the carrier is formed from the blank.

23. The blank of claim 22, wherein:

the at least one bottom container-receiving portion is foldably connected to the first bottom side panel and the second bottom side panel; and

the at least one top container-receiving portion is foldably connected to the first top side panel and the second top side panel.

24. The blank of claim 23, wherein:

the at least one bottom container-receiving portion comprises a first bottom side fold line and a second bottom side fold line, the first bottom side fold line extending from the bottom edge of the first bottom retainer flap to an edge of the bottom panel, and the second bottom side fold line extending from the bottom edge of the second bottom retainer flap to an edge of the bottom panel;

the at least one top container-receiving portion comprises a first top side fold line and a second top side fold line, the first top side fold line extending from the top edge of the first top retainer flap to an edge of the top panel, and the second top side fold line extending from the top edge of the second top retainer flap to an edge of the top panel; and

each of the first bottom side panel, the second bottom side panel, the first top side panel, and the second top side panel comprises an oblique score.

25. A method of forming a package comprising a carrier and a plurality of containers, the method comprising:

obtaining a carrier blank comprising a bottom panel, a top panel foldably connected to the bottom panel along a longitudinal fold line, a bottom gripping portion in the bottom panel, a top gripping portion in the top panel, at least one bottom container-receiving portion foldably connected to the bottom gripping portion in the bottom panel, and at least one top container-receiving portion foldably connected to the top gripping portion in the top panel;

forming a handle and at least one container receiver foldably connected to the handle, the forming comprising folding the top panel along the longitudinal fold line into face-to-face contact with the bottom panel so that the top gripping portion is substantially in face-to-face contact with the bottom gripping portion to form the handle and the at least one bottom container-receiving portion is in face-to-face contact with the at least one top container-receiving portion to form the at least one container receiver; and

inserting at least a portion of a container of the plurality of containers into the at least one container receiver.

26. The method of claim 25, wherein:

the at least one container receiver at least partially defines an opening and comprises a first retainer flap and an opposing second retainer flap disposed adjacent the opening, each of the first retainer flap and the second retainer flap comprising an edge; and

the inserting at least a portion of the container of the plurality of containers comprises positioning a shoulder of the container so that at least a portion of at least one of the first retainer flap and the second retainer flap engages an underside of the shoulder.

27. The method of claim 26, wherein:

the bottom panel comprises a bottom end portion foldably connected to the at least one bottom container-receiving portion;

the top panel comprises a top end portion foldably connected to the at least one top container-receiving portion; and

the method further comprises forming an end panel by positioning the bottom end portion in face-to-face contact with the top end portion when folding the top panel along the longitudinal fold line into face-to-face contact with the bottom panel.

28. The method of claim 27, wherein:

the handle comprises a first bottom side panel and an opposing second bottom side panel foldably connected to the bottom gripping portion of the handle;

the handle comprises a first top side panel and an opposing second top side panel foldably connected to the top gripping portion of the handle;

the at least one bottom container-receiving portion is foldably connected to the first bottom side panel and the second bottom side panel;

the at least one top container-receiving portion is foldably connected to the first top side panel and the second top side panel; and

the forming the handle further comprises positioning the first top side panel and the second top side panel in substantially face-to-face contact with the respective first bottom side panel and second bottom side panel to respectively form a first side panel and a second side panel.

29. The method of claim 28, wherein the inserting the container of the plurality of containers further comprises folding the first side panel and the second side panel downwardly along at least one longitudinal fold line and positioning the first retainer flap and the second retainer flap of each container receiver of the plurality of container receivers to extend at least partially upwardly from the at least one container receiver.

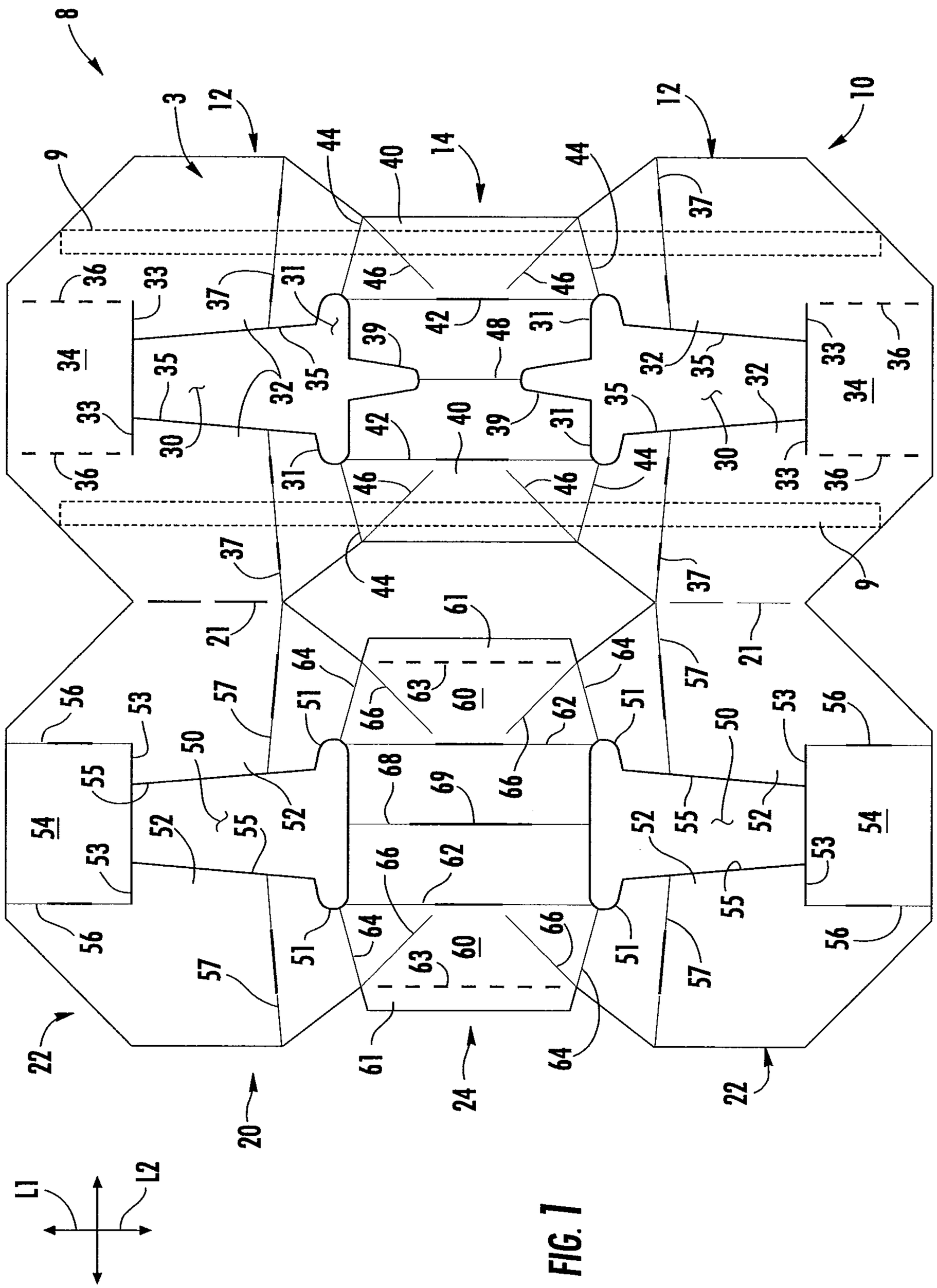
8
3
12
9
44
40
14
12
10
37
36
33
31
46
42
48
39
34
35
32
30
21
61
64
63
60
66
62
57
51
50
56
53
55
52
54
68
69
22
20
24
L1
L2

FIG. 1

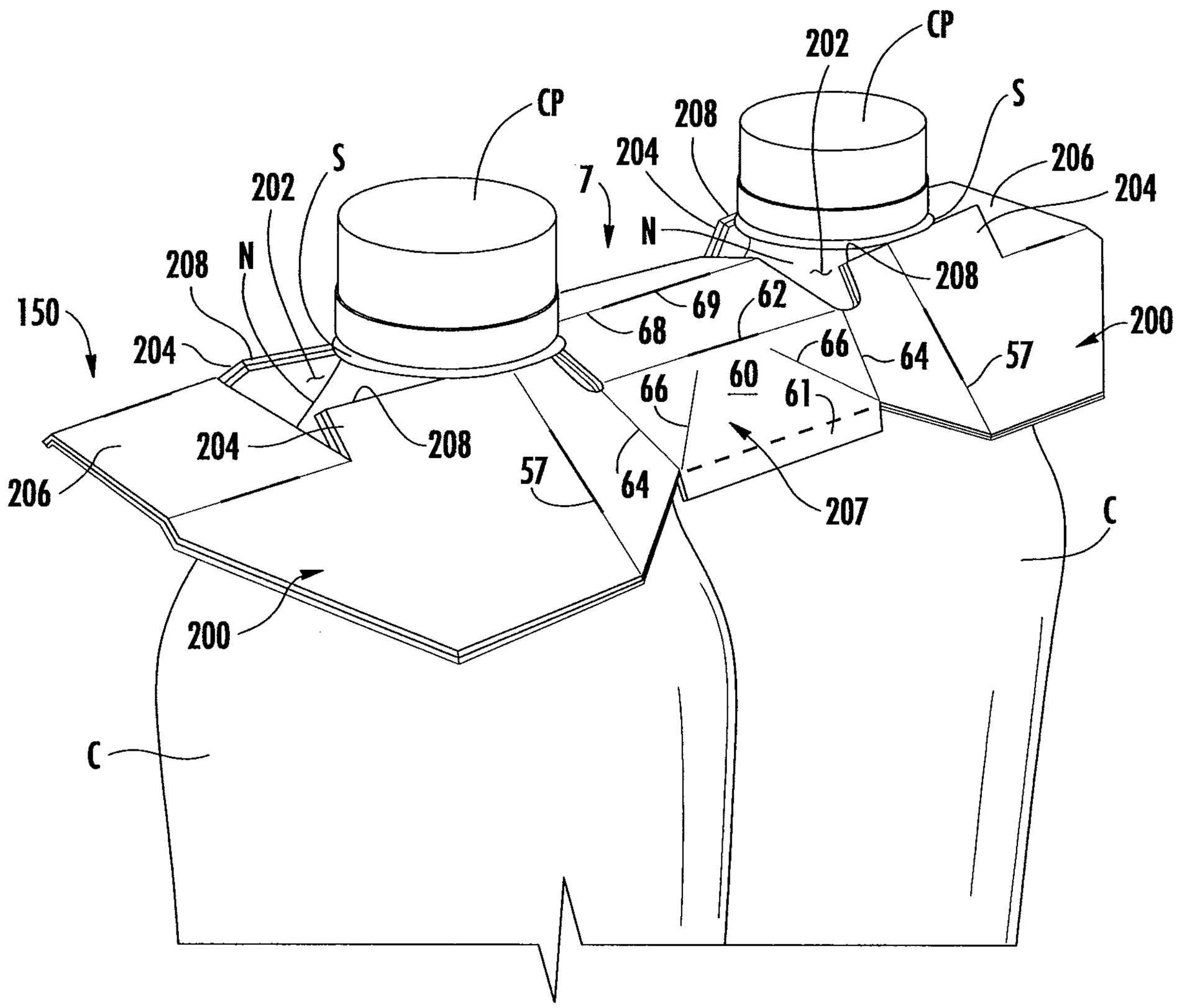
CP
202
CP
S
208
204
7
206
204
S
202
N
208
N
208
150
69
62
68
200
204
66
64
57
60
66
61
204
208
206
57
64
207
C
200
C

FIG. 2

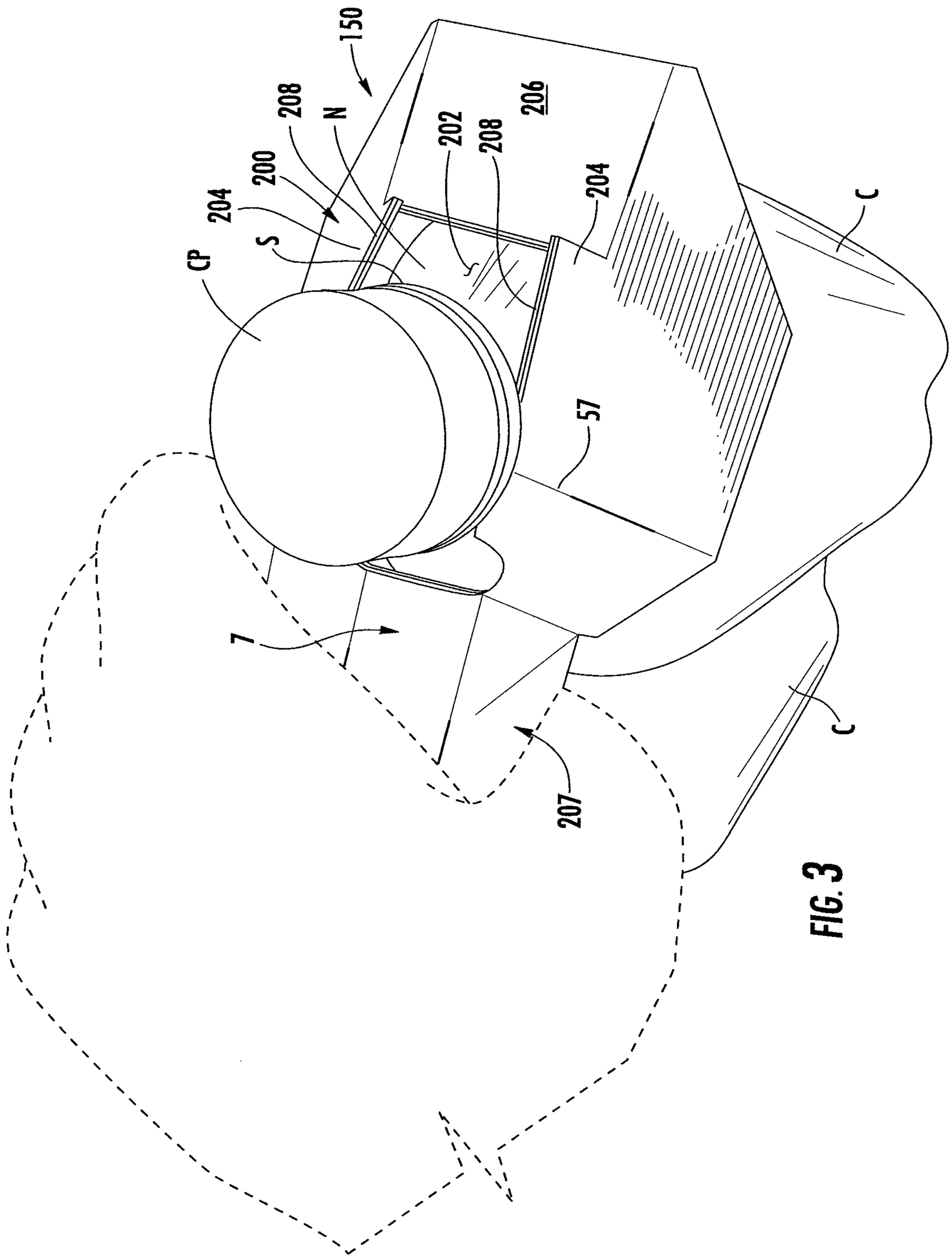

FIG. 3

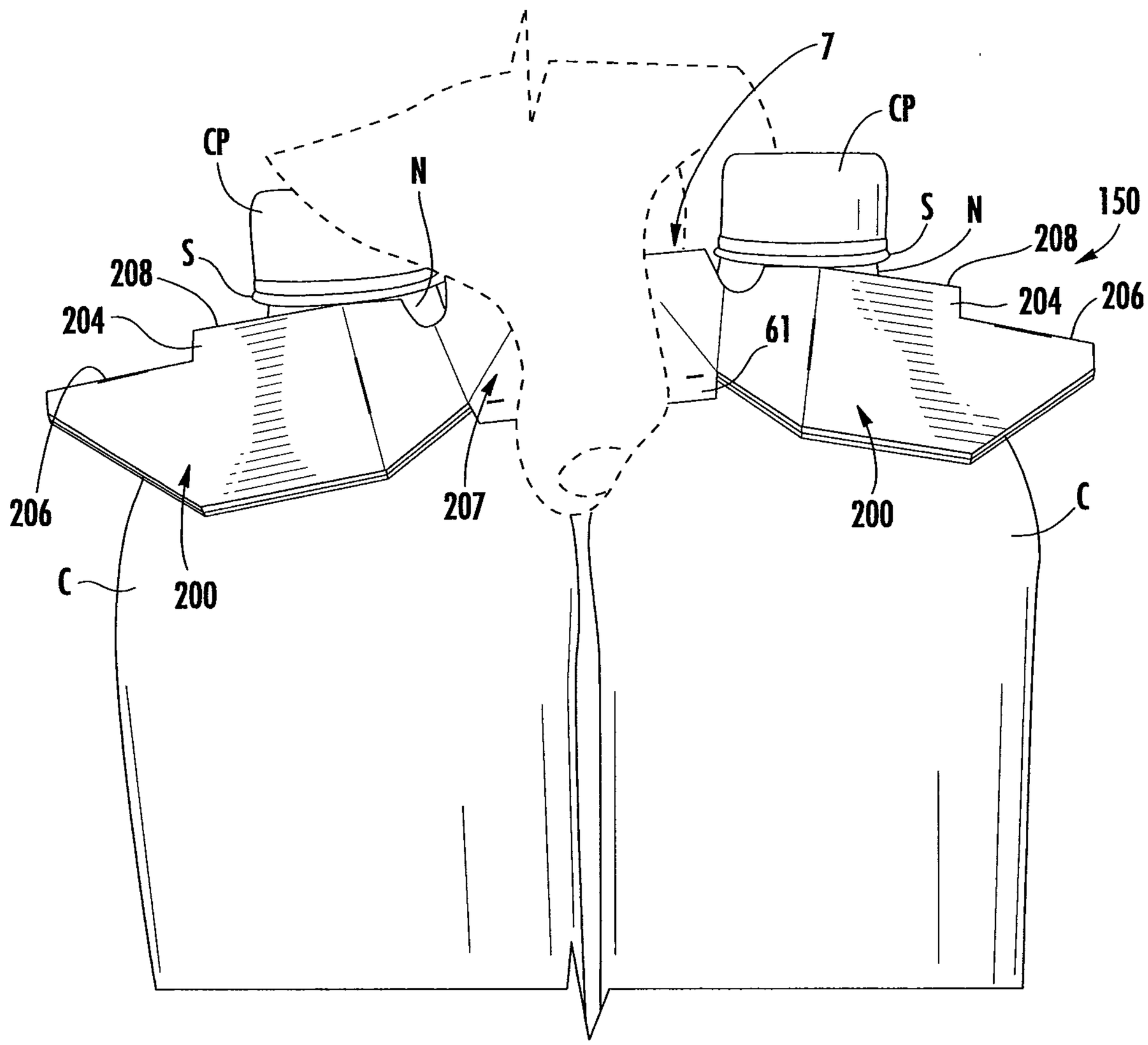

FIG. 4

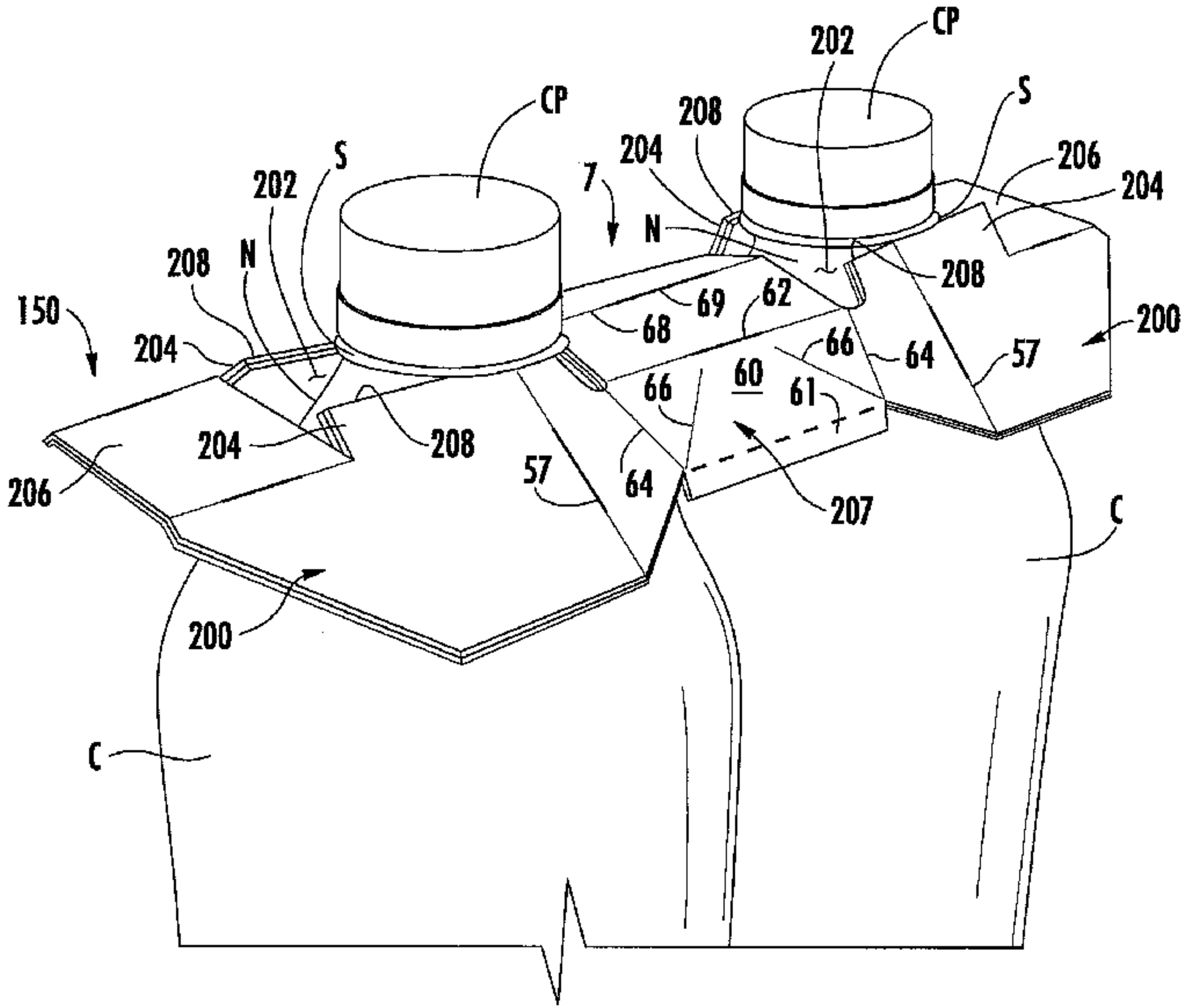

CP
202
CP
S
208
204
206
204
S
202
7
N
208
N
208
150
69
62
200
204
68
66
64
57
60
66
61
204
208
206
57
64
207
C
200
C

FIG. 2