No. 662,184. Patented Nov. 20, 1900.

T. A. BRIGGS & T. BARRETT.

STAPLING MACHINE.

(Application filed Mar. 5, 1900.)

(No Model.) 8 Sheets—Sheet 1.

Fig. 1

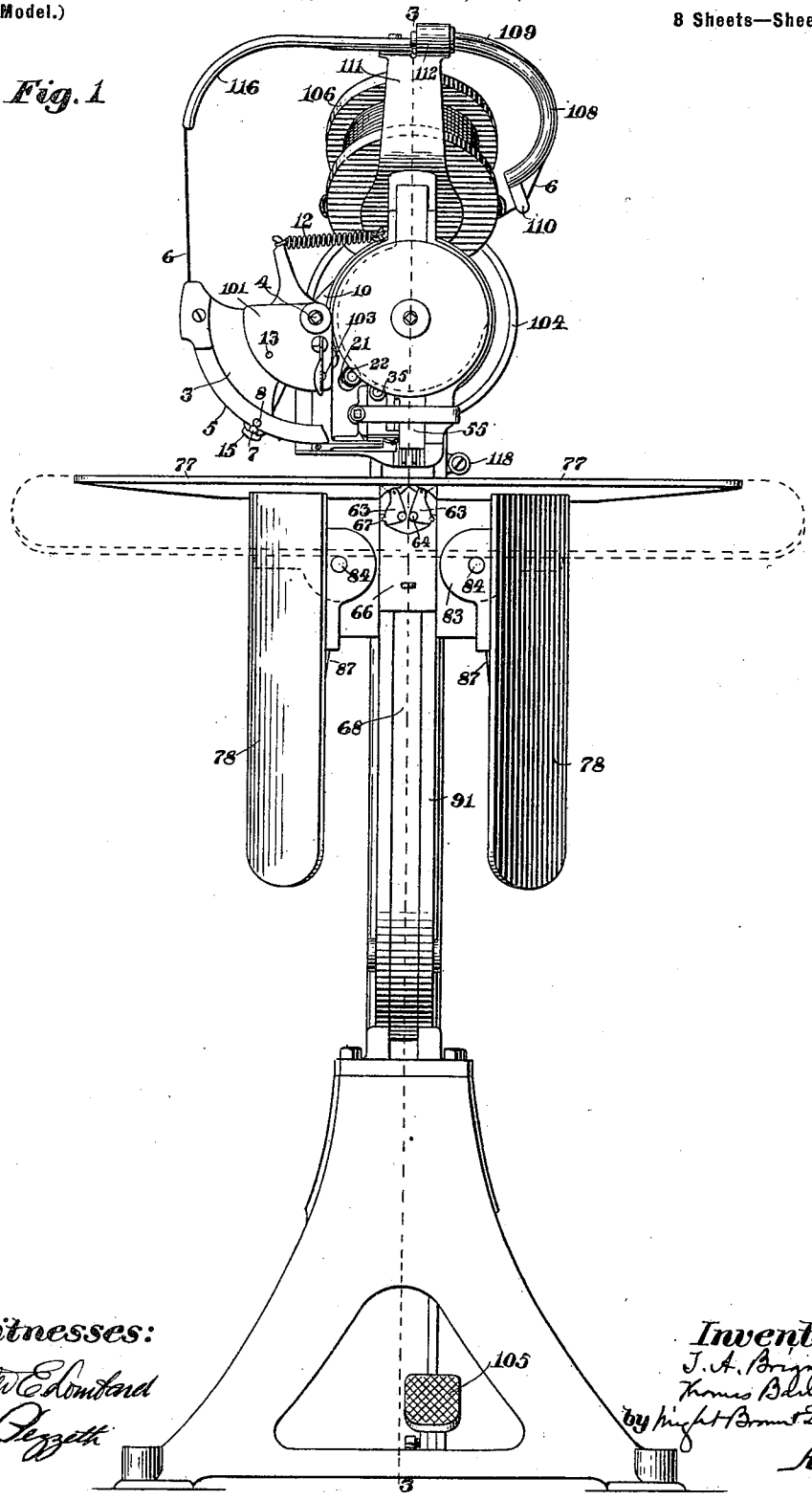

Witnesses:
Walter E. Lombard
P. A. Pezzetti

Inventors:
T. A. Briggs
Thomas Barrett
by Wright Brown & Quinby
Attys.

No. 662,184. Patented Nov. 20, 1900.

T. A. BRIGGS & T. BARRETT.

STAPLING MACHINE.

(Application filed Mar. 5, 1900.) 8 Sheets—Sheet 2.

(No Model.)

Fig. 2.

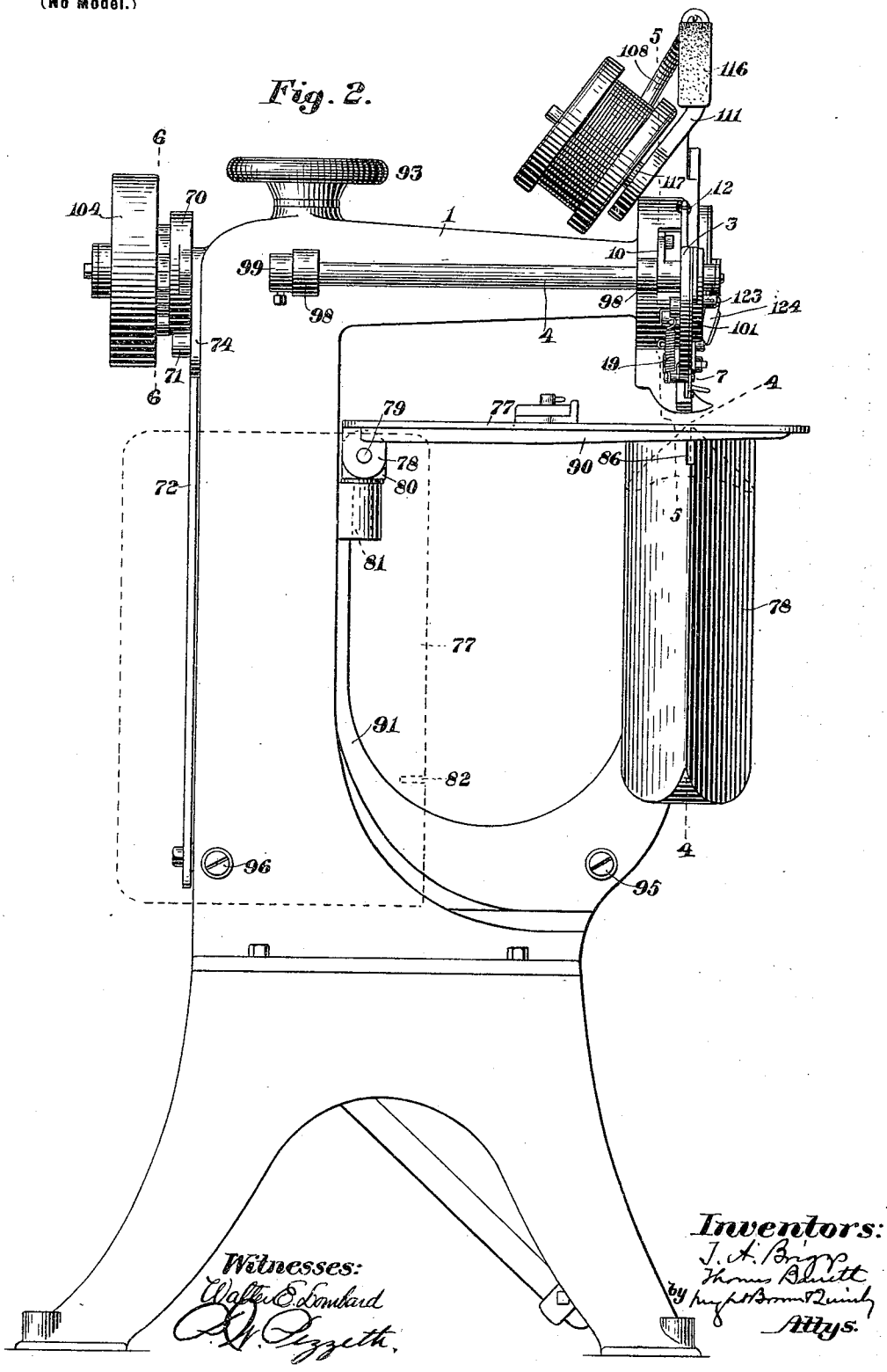

Witnesses:
Walter E. Lombard
A. H. Pizzeth.

Inventors:
T. A. Briggs
Thomas Barrett
by Hughes Brown & Quinby
Attys.

No. 662,184. Patented Nov. 20, 1900.

T. A. BRIGGS & T. BARRETT.

STAPLING MACHINE.

(Application filed Mar. 5, 1900.)

(No Model.) 8 Sheets—Sheet 3.

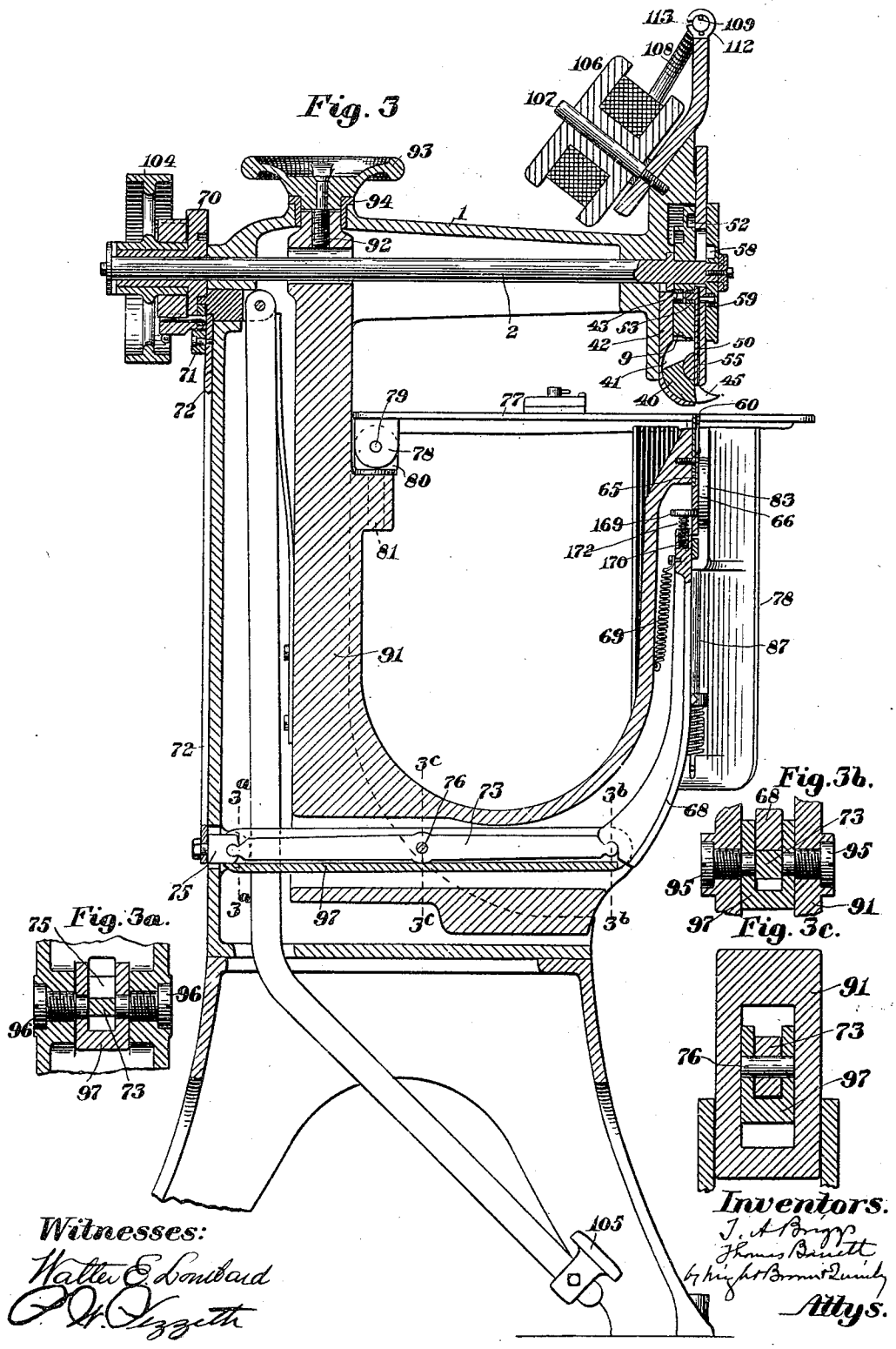

No. 662,184. Patented Nov. 20, 1900.

T. A. BRIGGS & T. BARRETT.

STAPLING MACHINE.

(Application filed Mar. 5, 1900.)

(No Model.) 8 Sheets—Sheet 4.

Fig. 4.

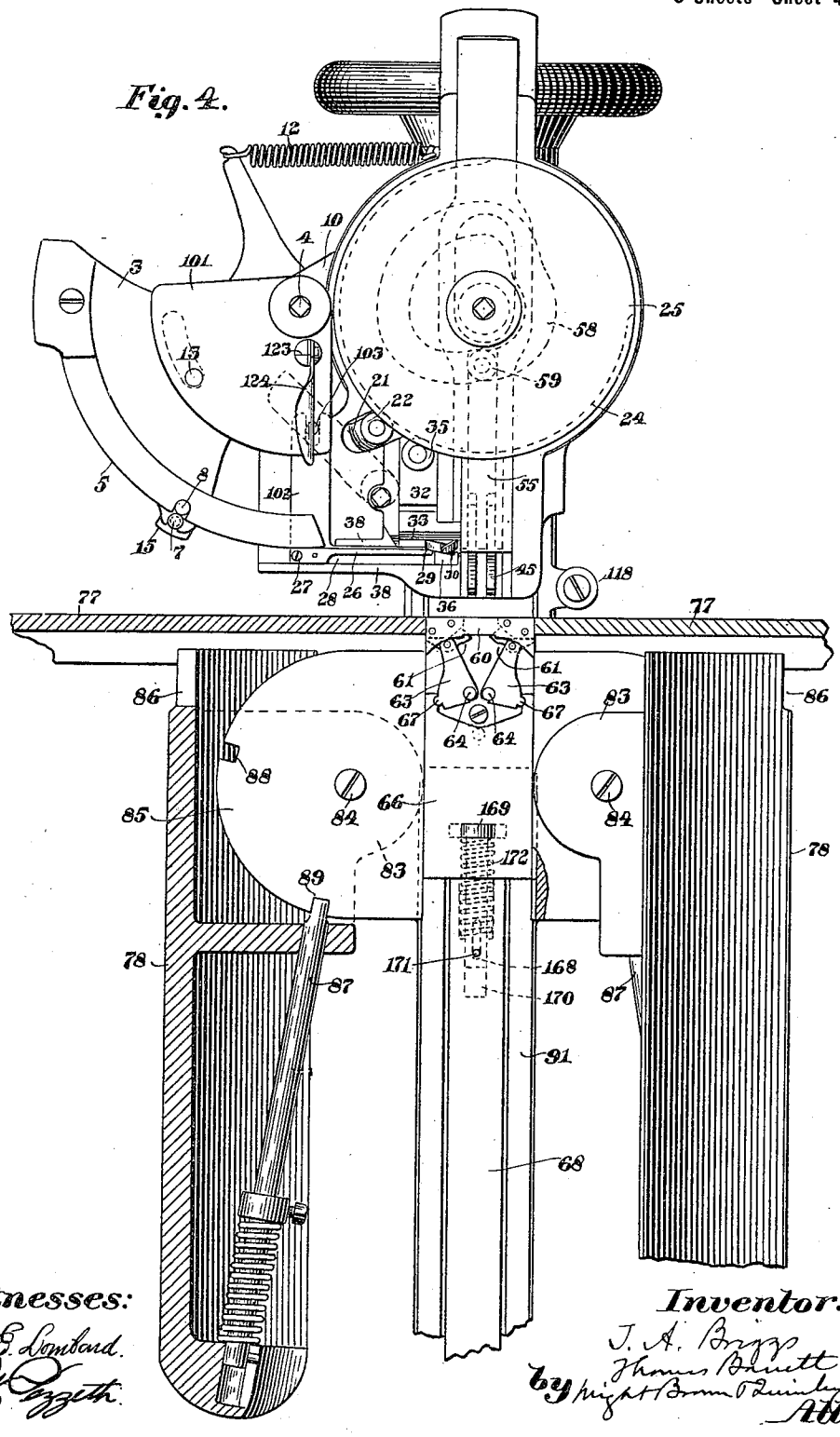

Witnesses:
Hattie E. Lombard.
R. H. Pizzeth.

Inventors:
T. A. Briggs
Thomas Barrett
by Wright Brown & Quinby
Attys.

No. 662,184. Patented Nov. 20, 1900.

T. A. BRIGGS & T. BARRETT.

STAPLING MACHINE.

(Application filed Mar. 5, 1900.)

(No Model.) 8 Sheets—Sheet 5.

Fig. 5.

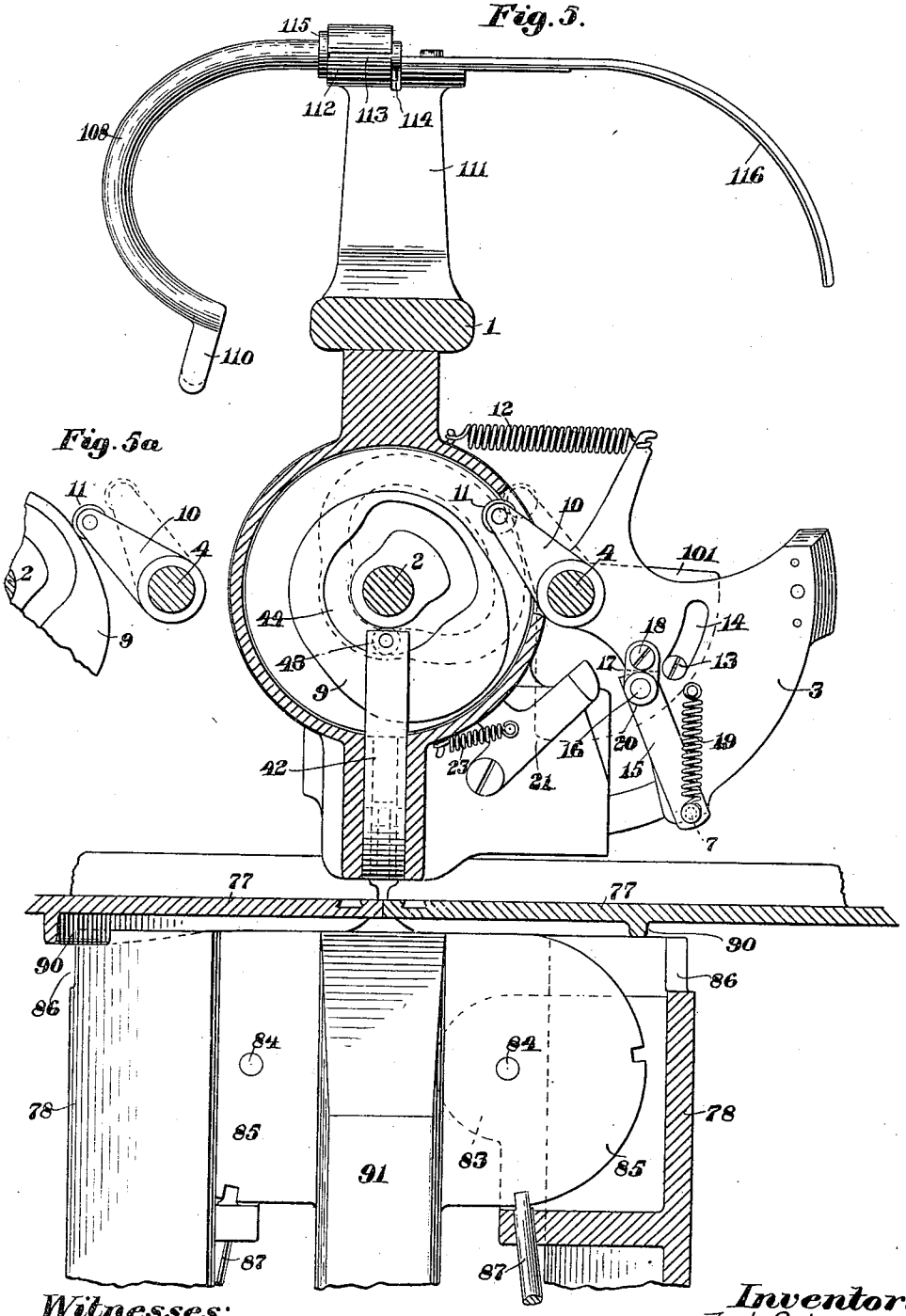

Witnesses:
Walter E. Lombard.
D. H. Pezzeth

Inventors:
T. A. Briggs
Thomas Barrett
by Wright Brown & Quinby
Attys.

No. 662,184. Patented Nov. 20, 1900.

T. A. BRIGGS & T. BARRETT.

STAPLING MACHINE.

(Application filed Mar. 5, 1900.)

(No Model.) 8 Sheets—Sheet 6

Fig. 6.

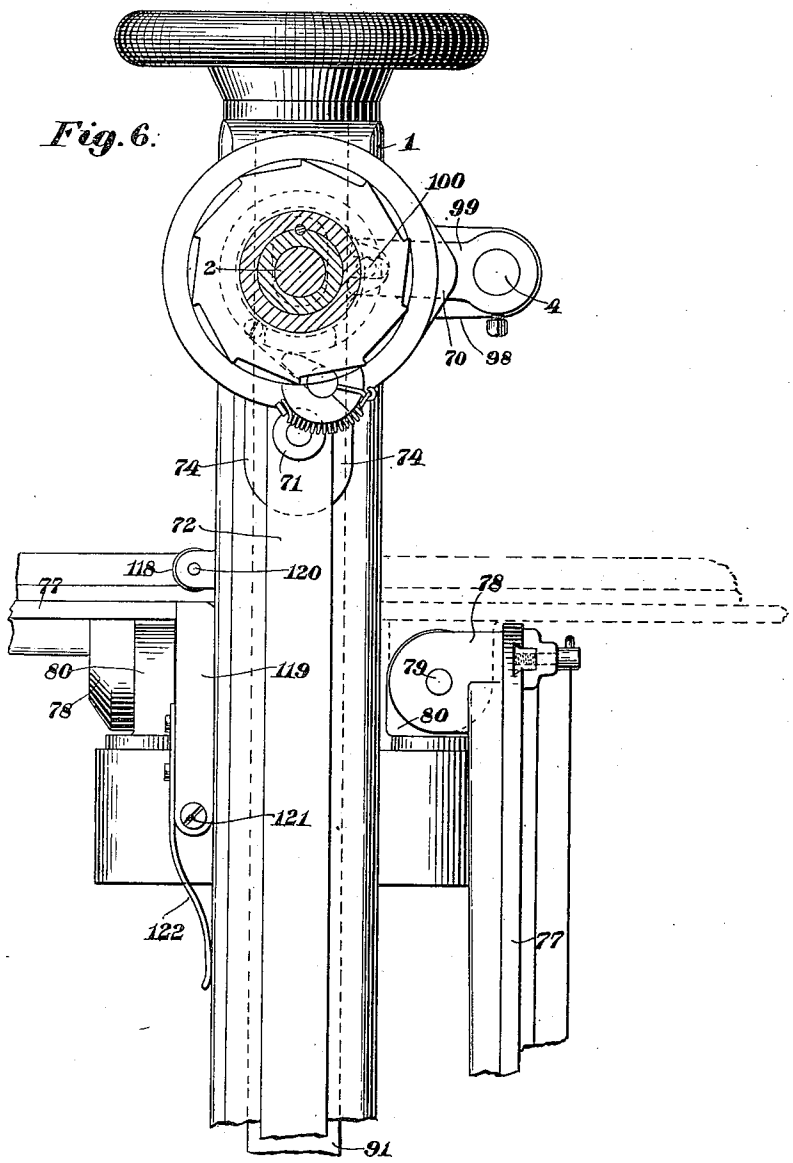

Witnesses:
Walter E. Lombard.
D. H. Pezzeth.

Inventors:
T. A. Briggs
Thomas Barrett
by Wright Brown & Quinby
Attys.

No. 662,184. Patented Nov. 20, 1900.

T. A. BRIGGS & T. BARRETT.

STAPLING MACHINE.

(Application filed Mar. 5, 1900.)

(No Model.) 8 Sheets—Sheet 7.

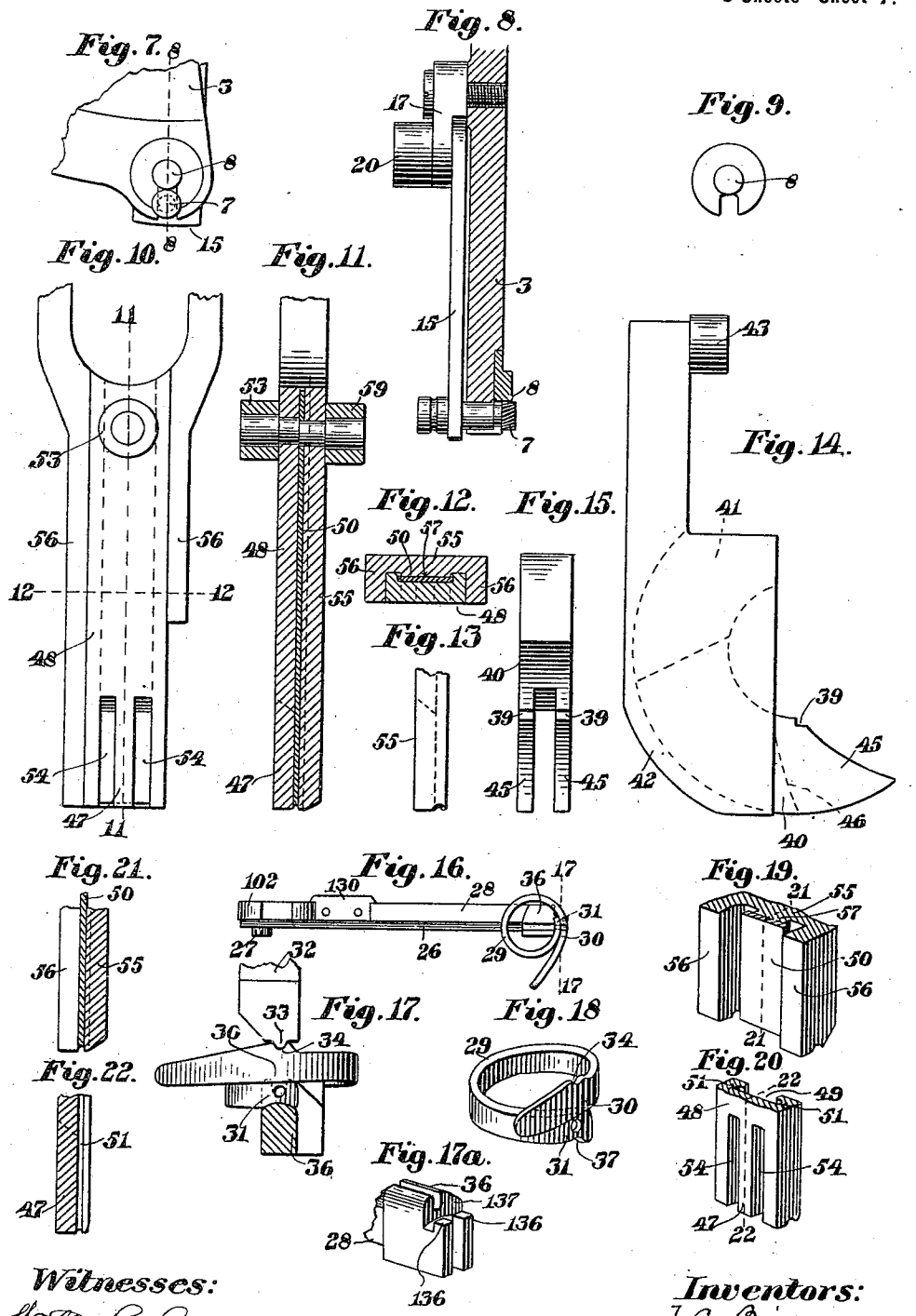

Witnesses:
Walter E. Lombard
P. W. Pizzetti.

Inventors:
T. A. Briggs
Thomas Barrett
by Wright Brown & Quinby
Attys.

No. 662,184. Patented Nov. 20, 1900.

T. A. BRIGGS & T. BARRETT.

STAPLING MACHINE.

(Application filed Mar. 5, 1900.)

(No Model.) 8 Sheets—Sheet 8.

Fig. 23.

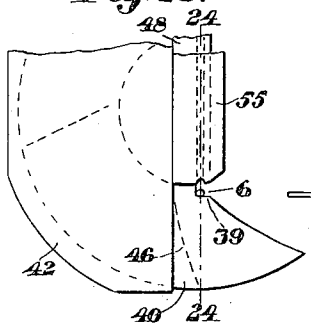

Fig. 24.

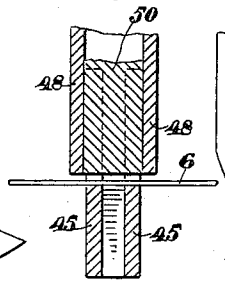

Fig. 25.

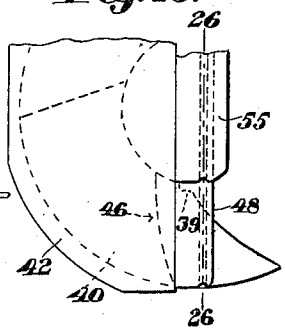

Fig. 26.

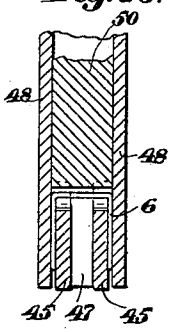

Fig. 27.

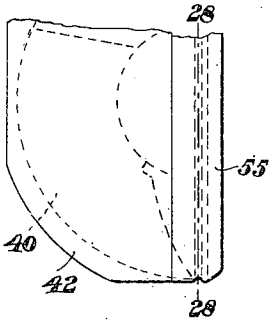

Fig. 28.

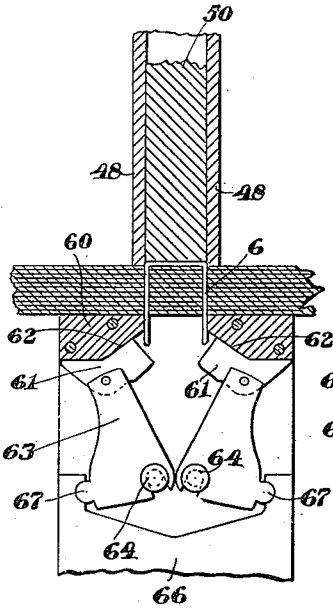

Fig. 29.

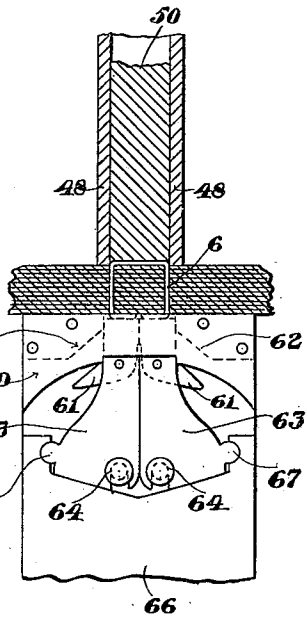

Fig. 30.

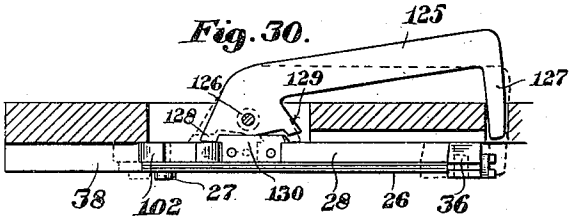

Witnesses:

Walter E. Lombard

P. J. Pezzetti.

Inventors:

T. A. Briggs

Thomas Barrett

by Wright Brown & Quinby

Attys:

UNITED STATES PATENT OFFICE.

THOMAS A. BRIGGS, OF ARLINGTON, AND THOMAS BARRETT, OF BOSTON, MASSACHUSETTS; SAID BARRETT ASSIGNOR TO SAID BRIGGS.

STAPLING-MACHINE.

SPECIFICATION forming part of Letters Patent No. 662,184, dated November 20, 1900.

Application filed March 5, 1900. Serial No. 7,335. (No model.)

To all whom it may concern:

Be it known that we, THOMAS A. BRIGGS, of Arlington, in the county of Middlesex, and THOMAS BARRETT, of Boston, in the county of Suffolk, State of Massachusetts, have invented certain new and useful Improvements in Stapling-Machines, of which the following is a specification.

This invention relates to machines employed for securing together sheets of paper by means of staples, the pack of sheets being placed upon a work-supporting bed or table, above which are located wire feeding, cutting, bending, and driving devices coöperating to form a staple and drive it through the pack of sheets and below which are located clenching devices which clench the projecting portions of the staple legs or prongs on the under side of the pack.

The invention has for its object, among other things, to provide improved means for proportionally adjusting the cutters and the wire-feed to form a staple of any desired length suited to the thickness of the work, a staple being formed with legs of uniform length after each adjustment.

The invention also has for its object to provide means whereby the work-support and the feeding and wire-cutting devices may be simultaneously adjusted, the feeding and cutting devices having a proportional adjustment relatively to each other and to the adjustment of the work-support, so that a single operation not only varies the thickness of the space between the work-support and the holding-down or pressing device that bears upon the upper surface of the work when a staple is being driven, but also proportionally varies the positions of the cutters and feeding device.

The invention also has for its object to provide improvements relating to the feeding mechanism, the cutters, the staple forming and driving mechanism, the clenching mechanism, the work-supporting means, and the means for supplying wire from a reel or spool to the feeding device.

The invention consists in the improvements which we will now proceed to describe and claim.

Of the accompanying drawings, forming a part of this specification, Figure 1 represents a front elevation of a stapling-machine embodying our invention. Fig. 2 represents a side elevation of the same. Fig. 3 represents a vertical section on the line 3 3 of Fig. 1. Figs. 3^a, 3^b, and 3^c represent, respectively, sections on the lines 3^a 3^a, 3^b 3^b, and 3^c 3^c of Fig. 3. Fig. 4 represents an elevation of a portion of the machine, showing portions of the flat work-support and one of the sections of the saddle-shaped support in section, the section being on line 4 4 of Fig. 2. Fig. 5 represents a section on line 5 5 of Fig. 2. Fig. 5^a represents a view similar to a portion of Fig. 5, showing a different stage of the operation. Fig. 6 represents a section on line 6 6 of Fig. 2 and an end elevation of parts of the machine at the right of said line. Fig. 7 represents a side view of a portion of the feeding-arm. Fig. 8 represents a section on line 8 8 of Fig. 7. Fig. 9 represents a detached view of the fixed jaw on the feeding-arm. Fig. 10 represents a side view of the staple-bender and its guide, the upper portion of the latter being broken away. Fig. 11 represents a section on line 11 11, Fig. 10. Fig. 12 represents a section on line 12 12, Fig. 10. Fig. 13 represents an edge view of the lower portion of the bender-guide. Fig. 14 represents a side elevation of the presser-foot and the gravitating anvil. Fig. 15 represents a top view of the anvil detached. Fig. 16 represents a top view of the slide or carrier which supports the wire-cutters. Fig. 17 represents an elevation of the cutters, their support, and a portion of the slide which depresses the upper cutter, the support being shown in section taken on the line 17 17 of Fig. 16. Fig. 17^a represents a perspective view of a portion of the cutter-support. Fig. 18 represents a perspective view of the cutters and their connecting-shank. Fig. 19 represents a perspective view of the lower portion of the bender-guide and the driver. Fig. 20 represents a perspective view of the lower portion of the bender. Fig. 21 represents a section on line 21 21, Fig. 19. Fig. 22 represents a section on line 22 22, Fig. 20. Fig. 23 represents a side view, showing the anvil in its operative position, the bender, driver, and bender-guide being raised. Fig. 24 represents a section on

line 24 24, Fig. 23. Fig. 25 represents a view similar to Fig. 23, showing the bender depressed to form the staple. Fig. 26 represents a section on line 26 26, Fig. 25. Fig. 27 represents a view similar to Figs. 23 and 25, showing the bender, bender-guide, and driver depressed. Fig. 28 represents a section on line 28 28, Fig. 27, showing the staple before the clenching operation. Fig. 29 represents a view similar to Fig. 28, showing the staple after the clenching operation. Fig. 30 represents a top view of the wire-cutter-supporting slide or carrier and a holding-down finger for the wire, which is oscillated by the movements of the slide.

The same reference characters indicate the same parts in all the figures.

In the drawings, 1 represents a fixed horizontal arm or gooseneck overhanging the work-supporting devices, hereinafter described, and having bearings in which are journaled the driving-shaft 2. To said shaft are affixed the operating-cams, hereinafter described, which impart motion to the wire-feeding, cutting, bending, driving, and clenching mechanisms.

The wire-feeding mechanism comprises an arm 3, which is adapted to oscillate on a suitable support, here shown as a shaft 4, forming a part of the knife and feed-adjusting mechanism hereinafter described. The arm 3 has a segmental outer end or edge 5, which is grooved to guide the wire 6, and is provided with a wire grasping and releasing jaw 7, which clamps the wire against a fixed jaw 8 on the arm 3 when the latter is moving forward and releases the wire when the arm 3 is moving backward. The arm 3 is moved forward to feed the wire by means of a feed-cam 9, Fig. 5, affixed to the driving-shaft, and an arm 10, affixed to the feeding-arm and carrying a trundle-roll 11, arranged to be acted on by the cam 9. A spring 12 normally holds the feeding-arm against an adjustable stop 13, Fig. 5, which limits the backward movement of the feeding-arm, said stop 13 being affixed to the shaft 4 through the arm 101, as hereinafter described. As here shown, the feeding-arm has a segmental slot 14, adapted to play on the stop 13, one end of said slot being held by the spring 12 against the stop. The stop and the means for adjusting it will be described more fully hereinafter.

The jaw 7 is affixed to a link 15, which is pivoted at 16, Fig. 5, to another link 17, the latter being pivoted at 18 to the feeding-arm. A spring 19 normally holds the links 15 17 out of alinement with each other, as shown in Fig. 5, the jaw 7 being held at the same time by the spring against the wire with sufficient force to clamp it to the jaw 8 and cause the wire to move with the feeding-arm. The links and jaw are in this position during the entire forward movement of the feeding-arm. At the end of said movement a roll 20, Figs. 5 and 8, on the pivot-stud 16 is in the path of an oscillating arm 21, having a trundle-roll 22, Fig. 4, which is held by a spring 23 against a cam 24 on the driving-shaft. A projection 25 on the said cam is timed to force the outer end of the arm 21 against the roll 20, thus throwing the links practically into alinement with each other and forcing the jaw outwardly, causing it to release the wire when the feeding-arm reaches the forward end of its movement, the pivot 16 connecting the links being slightly at one side of the median line of the links, so that they remain in alinement with each other during the backward movement of the feed-arm. This positive separation of the jaws prevents the jaws from rubbing and scraping the wire during their backward movement. Just as the feed-arm reaches the end of its backward movement the roll 20 strikes the stop 13, and the links are thus displaced from their position of alinement and the spring 19 restores the links to the position shown in Fig. 5, the jaw 7 being again pressed against the wire. At this stage of the operation the projection 25 of the cam 24 is away from the vicinity of the roll 22, so that said roll is permitted to move toward the axis of the cam 24 far enough to permit the last-described movement of the jaw 7. During the backward movement of the feed-arm the wire is held and prevented from moving backwardly with it by means of a spring-finger 26, Figs. 4 and 16, one end of which is attached by a screw 27 to an adjustable slide 28, hereinafter described, and the resilient shank 29, connecting the wire-cutters 30 and 31, Figs. 16 and 18. The upper edge of said finger 26, which is grooved to guide the wire, is in close proximity to or in sliding contact with the lower edge of the segmental end of the feed-arm and extends tangentially therefrom to the shank 29, the wire passing between the lower edge of the feed-arm and the upper edge of the guide-finger 26. The end of the finger 26 opposite the attached end exerts an upward pressure against the wire which passes between it and the cutter connecting shank 29, the cutter 30 being at this time depressed, so that the shank 29 is pressed downwardly against the wire.

The wire-cutters 30 31 are peculiarly constructed and connected, said cutters and the shank 29 being formed from a single strip of tempered steel bent to scroll form, as shown in Fig. 16, one end of the strip overlapping the other, said ends constituting the cutters. An orifice is formed through the strip near its inner end, as shown in Figs. 17 and 18, through which the wire passes. The intersection of the lower margin of said orifice with the outer side of the strip forms the lower cutter 31, while the lower edge of the overlapping portion of the strip constitutes the upper cutter 30. The resilience of the strip holds the two cutters normally separated, as shown in Figs. 17 and 18. A slide 32, Fig. 4, movable vertically between fixed guides, has a bead 33 on its lower edge engaged with a notch 34 in the upper cutter. A trundle-roll 35 on said slide is held

by the resilience of the cutter-strip against the cam 24, which operates the feed-jaw 7, the slide being alternately depressed by the projection 25 of said cam and raised by the resilient cutter-strip, each depression of the slide causing the cutters to sever a staple-blank from the wire and the shank 29 to co-operate with the finger 26 in grasping the wire. The slide 32 has a slot 320, Fig. 4, in which the blade of a screw-driver or other tool may be inserted to enable the operator to depress the slide, and with it the movable cutter, and thus cut off the projecting end of the wire in preparing for the operation of the machine. The lower cutter 31 is supported by a block 36, Figs. 4 and 17, having a rounded upper edge which fits a groove 37 in the cutter-strip, said edge and groove preventing endwise displacement of the lower cutter as the rib 33 and groove 34 prevent endwise displacement of the upper cutter. The block 36 is affixed to the slide 28, which carries the spring-finger 26 and is engaged with the lower cutter, so that when the slide 28 is moved toward and from the anvil by the adjusting mechanism, hereinafter described, the cutters and the spring-finger move with it, the slide being guided horizontally by suitable fixed guides, (shown at 38 38, Fig. 4.) The block 36 has projections 136, Fig. 17[a], at its outer end, which bear against the outer side of the cutter 31 and hold the same against a shoulder 137, the cutter being thus held in place sidewise. The rib 33 of the cutter-depressing slide 32 is elongated and parallel with the guide 38, and the upper cutter slides on said rib when the cutters are being adjusted.

Each staple-blank severed by the cutters is guided onto shoulders 39 on a segmental anvil 40, which is fitted to slide in a segmental guide or slot 41, Figs. 3 and 14, in a vertically-movable presser 42. Said presser is provided at its upper end with a trundle-roll 43, which is engaged with a groove-cam 44 on the driving-shaft. When the wire is being fed forward and severed, the presser is raised, as shown in Fig. 3, and the anvil, which slides freely in its guide, is held by gravitation in the position shown in Figs. 3 and 14, the wire-supporting shoulders 39 on the anvil being in the path of the wire and in the path of the vender, hereinafter described. The lower portion of the anvil is slotted to form two prongs or horns 45 45, having inclined outer edges. The rear end 46 of the slot between the horns 45 also stands in an inclined position, as shown by dotted lines, and is in position to be acted on by a finger 47 on the bending-bar next described.

48 represents a bending-bar which is provided with a longitudinal recess 49, Fig. 20, in one side to receive the driver 50, the edges of said recess having grooves 51, which not only engage the edges of the driver, as shown in Fig. 12, but also confine the legs of the staple when the bending-bar descends, as shown in Figs. 25 and 26, the legs being bent downwardly over the outer sides of the horns of the anvil by the descent of the bending-bar, which is reciprocated by a groove-cam 52, receiving a trundle-roll 53 on the bending-bar. The lower end of the bending-bar has slots 54, Fig. 20, formed to receive the horns of the anvil when the bending-bar descends. The portion of the bar between said slots constitutes the finger 47, which enters the space between the anvil-horns and bears on the incline 46 at the inner end of said space, the parts being so formed that when the bending-bar has descended and the staple is bent and confined the anvil is displaced by the contact of the finger 47 with the incline 46 sufficiently to move the wire-supporting shoulders 39 of the anvil back from their operative position and out of the path of the driver, as shown in Fig. 25, so that the staple is free to be driven, the upper ends of the inclines on the anvil-horns being thus brought within the path of the driver, so that the driver in its descent will further displace the anvil, as shown in Fig. 27. The segmental edges of the anvil and the corresponding guiding edges on the presser-foot are concentric with each other and are arcs of circles whose center is in the path of the bender and driver, the wire-supporting shoulders 39 being in the same path below said center. This arrangement prevents any backward displacement of the anvil by the pressure exerted on it by the bender until the latter strikes the incline 46 on the anvil, this being after the staple has been bent. The bending-bar is guided in its vertical movements by a guide-bar 55, having flanges 56, Fig. 19, between which the driver-bar fits, the side of the guide-bar between said flanges having an offset face 57, against which the driver bears. The guide-bar and driver are reciprocated vertically by means of a groove-cam 58, receiving a trundle-roll 59 on a stud which is engaged both with the guide-bar and the driver, as shown in Fig. 11.

The presser 42 is depressed to bear on and compress the work after the formation of the staple and while the driver is descending, so that the work is clamped firmly between the presser and the work-support while the staple is being driven.

The legs of the driven staple are received in a slotted throat 60, Figs. 4, 28, and 29, which is located below the staple forming and driving devices and is supported by the jack 91, hereinafter described. Two clenching-jaws 61 61 are located at opposite ends of the slot in said throat and are movable diagonally on inclined guide-faces 62 62, Fig. 28, in the throat to clench the projecting portions of the prongs of the staple, as indicated in Fig. 29. The clenching-jaws are pivoted to levers 63 63, which are fulcrumed at 64 64 on a supporting-piece 65, attached to the jack above mentioned. Said levers are oscillated to move the clenching-jaws to and from the positions indicated in Figs. 28 and 29 by the following

means: 66 represents a plate having ears or lugs provided with recesses which engage projections 67 on the levers 63. Said plate is connected with an arm 68, which is reciprocated vertically by the alternate action of a spring 69, which depresses the arm, and a cam 70 on the shaft 2, which cam acts through a trundle-roll 71, a rod 72, and a lever 73 to raise the arm 68. The rod 72 slides between guides 74 74, Fig. 6, on the gooseneck 1, and has an ear 75 at its lower end which is slotted to receive a rounded tip on one end of the lever 73. Said lever is fulcrumed at 76 to a support, hereinafter described, and has a rounded tip on its opposite end engaging a recess in the arm 68. The spring 69 acts through the arm 68, lever 73, and rod 72 to hold the trundle-roll 71 against the cam 70. The depression of the trundle-roll by the cam elevates the clencher-operating slide immediately after the descent of the driver. The connection between the plate 66 and the arm 68 is yielding, so that the clenchers when in the position shown in Fig. 29 can adapt themselves to the thickness of the wire. Said connection, as shown in Figs. 3 and 4, comprises a stub 168, fitted to have a limited vertical movement in a socket 170 in the arm 68, its movement being limited by a pin 171, inserted in the arm and passing through a slot in the stud. The stud has a head 169, projecting into a slot in the plate 66. A spring 172, interposed between said head and the arm 68, imparts upward movement from the arm to the stud, the plate 66, and the clenchers when the arm is rising and permits the stud, plate, and clenchers to stop in case the clenchers have done their work before the completion of the upward movement of the arm.

Suitable work-supports are provided to hold the work to be stapled at the proper height relatively to the throat, two interchangeable supports being here shown—namely, a flat table composed of two sections 77 77, adapted to support flat sheets, and an angular table or saddle composed of two sections 78 78, adapted to support sheets that have been folded. Each of said sections is jointed to the adjustable jack 91, presently described, so that it can be swung into and out of its operative position. Each of the flat sections 77 has an ear 78, Figs. 2, 3, and 6, which is connected by a horizontal pivot 79 with an ear 80, connected by a vertical pivot 81 with a socket in the jack 91. Each flat section is thus adapted to swing from the horizontal operative position shown by full lines in Fig. 2 to the vertical inoperative position shown by dotted lines, their inner edges meeting when in their operative position, as shown in Fig. 1, so that they collectively form a flat table, said inner edges having slots 82, (shown in dotted lines in Fig. 2,) which receive the staple-receiving throat 60, as indicated in Fig. 4. The saddle-sections 78 have ears 83, which are connected by horizontal pivots 84, Figs. 1, 3, and 4, with ears 85 on the jack, so that they are capable of swinging from the vertical inoperative positions shown in full lines in Figs. 1 and 6 to the horizontal operative positions shown in dotted lines, this being possible only when the flat sections are displaced. The inner ends of the saddle-sections have slots 86 to receive the throat 60. When the saddle-sections are raised, they are locked in their raised positions by spring-pressed bolts 87 engaging notches 88 in the ears 85, and when they are depressed they are locked by the engagement of said bolts with notches 89. The saddle-sections when depressed serve as supports for the flat sections, as indicated in Figs. 1 and 5, the flat sections having notched ribs 90, which bear on the ends of the saddle-sections. It will be seen that each of the two work-supports is divided at the center line of the machine, the sections of each support meeting at the center of the length of the throat 60, so that each support is adapted to be moved quickly to and from its operative position, each being entirely out of the way of the other when its sections are displaced.

An important part of our invention is embodied in the means next described for simultaneously adjusting the cutters and the feed mechanism to vary the length of the staple and at the same time varying the height of the clenching-throat and the work-support to vary the width of the work-receiving space between the throat and the presser, the said space and the length of the stable being thus simultaneously adjusted to the thickness of the work. In carrying out this part of our invention we provide the jack 91, which supports the throat 60, the work-supports, and the clenching devices, means for vertically adjusting said jack to vary the thickness of the work-receiving space between the throat and presser, and connecting mechanism between the jack and the cutting and feeding mechanism, whereby an upward movement of the jack, which decreases the thickness of the work-receiving space, also adjusts the cutters and the feeding-arm toward the anvil and adjusts the mechanism that operates the feeding-arm, the arrangement being such that the blank severed by the cutters is always centered on the anvil, its ends being at equal distances from the sides of the anvil whatever may be its length, and the thickness of the work-receiving space between the throat and the presser-foot is always proportioned to the length of the staple.

The jack 91 is shown in Fig. 3 as a substantially U-shaped body, one arm of which is longer than the other, the clenchers being connected with the shorter arm. The longer arm extends upwardly into the gooseneck 1 and has a screw-threaded orifice which engages a short screw 92, Fig. 3, attached to a hand-wheel 93, which is adapted to rotate on a fixed seat or bearing 94 on the gooseneck. The rotation of the screw 92 therefore imparts a vertical movement to the jack, the

lower portion of which is connected by pivot-screws 95, Fig. 3[b], with one end of a radius bar or strut 96, the other end of which is fulcrumed on pivot-screws 96, Fig. 3[a], supported by the frame of the machine. The said bar or strut supports the lower portion of the jack against the lateral sagging movement which it would naturally have if supported only by the screw 92. The fulcrum 76 of the lever 73 of the clencher-operating mechanism is supported by the radius-bar 97, said fulcrum rising and falling with the jack, so that the operation of the clenchers is not affected by changes in the vertical position of the throat and work-support. The connections between the jack and the cutting and feeding mechanism whereby the vertical movements of the jack are caused to adjust the cutters and the feeding-arm are as follows in this embodiment of our invention: The shaft 4, which supports the feeding-arm 3, is a rock-shaft journaled in bearings 98 98 on the gooseneck, the feeding-arm being free to be oscillated on said shaft by the cam 9 and spring 12, as above described. To one end of the shaft 4 is attached an arm 99, Figs. 2 and 6, the slotted outer end of which is engaged with a pin 100 on the jack, as shown by dotted lines in Fig. 6. To the other end of the shaft 4 is attached an adjusting-arm 101, which is preferably quadrant-shaped and stands beside the feeding-arm 3. The adjustable stop 13, which determines the length of the feed movement, is a pin or stud affixed to the adjusting-arm 101 and entering the segmental slot 14 in the feeding-arm. It will be seen that when the jack is raised or lowered the shaft 4 is turned in its bearings through the pin 100 and arm 99, Fig. 6, and that the adjusting-arm 101 and stop 13 are then moved in the arc of a circle toward or from the anvil, an upward movement of the jack causing the stop to move toward the anvil while a downward movement of the jack causes an opposite movement of the stop. The feeding-arm 3 moves or is adjusted with the adjusting-arm 101 when the latter is being moved by the jack, one end of the slot 14 in the feeding-arm being held by the spring 12 in contact with the stop 13, as already stated. The slide 28, which carries the cutter-supporting block 36 and wire-guiding finger 26, has an upwardly-projecting ear 102, Fig. 4, the slotted upper end of which engages a pin 103, affixed to the adjusting-arm 101. Hence the movements of the adjusting-arm are also imparted to the slide 28 and to the cutters 30 and 31, the cutters and the feeding-arm being adjusted simultaneously toward or from the anvil. It is to be noted at this point that the distance between the wire-supporting segmental edge 5 of the feeding-arm and the center of its swinging motion—namely, the center of the shaft 4—is twice as great as the distance between the stop 13 and the said center, while the pin 103 and the stop 13 are equidistant from the center. It follows, therefore, that the adjusting movement imparted to the feed-arm is twice as great as that imparted to the cutters. It is to be further noted that the form and arrangement of the feed-arm operating cam 9 and arm 10 are such that the length of the feed movement is directly proportioned to the adjustment of the feed-arm, so that when the feed-arm is adjusted toward the anvil the length of the feed movement is shortened and when the feed-arm is adjusted in the opposite direction the length of the feed movement is lengthened. This will be understood by reference to Fig. 5, which shows the relative positions of the cam 9 and arm 10 when the feed-arm and cutters are adjusted to produce the shortest staple, and to Fig. 5[a], which shows the relative positions of said parts when the feed-arm and cutters are adjusted to produce the longest staple, the full lines showing the positions when the machine is at rest. In each of said figures the extent of movement imparted to the arm 10, and therefore to the stop 13 and feeding-arm 3, is shown by the full and dotted lines, the full lines showing the position of the arm 10 when the feeding-arm is at its closest proximity to the anvil and the dotted lines the position when the feeding-arm is fully retracted.

It will be seen that when the feeding-arm is adjusted to produce the shortest staples the trundle-roll 11 is farther from the center of revolution of the cam 9 than when the adjustment is for longer staples. Hence the cam imparts a shorter movement to the arm 10 and the feeding-arm 3. When the feeding-arm is adjusted to produce the longest staples, the trundle-roll is in position to receive the full throw for which the cam is designed. The driving-shaft is impelled by a driving-pulley 104, which is normally loose on the shaft, a clutch mechanism being employed which is made operative by pressure of the operator's foot on a treadle 105 and is made inoperative automatically when the pressure is removed.

The wire is supplied from a spool 106, which is mounted to rotate loosely on an inclined spindle 107, affixed to the gooseneck. The wire is guided from the spool by a curved guide-arm 108, which is provided with a longitudinal groove 109, formed to receive the wire, and with a finger 110 at its lower end, through the grooved outer end of which the wire passes to the grooved body of the arm, as shown in Fig. 1. The upper end of the said guide-arm is movably secured to a bracket 111, affixed to the gooseneck and having at its upper end a socket 112, in which the upper portion of the arm 108 is fitted to turn. The socket has a slot 113, which when the arm 108 is in its normal position (shown in Figs. 1, 2, 3, and 5) is out of alinement with the groove in said arm, so that the wall of the socket covers the groove in the arm, as shown in Fig. 3, thus preventing lateral movement of the wire in any direction. The arm 108 may be turned to

bring its groove into alinement with the slot, and when this is done the wire may be moved laterally into or out of the groove in the arm 108 through the slot. A pin 114, Fig. 5, on the arm 108 bearing against the inner end of the socket 112 and a collar 115 on said arm bearing against the outer end of the socket prevent endwise movement of the arm. The wire passes from the arm 108 to the feeding-arm 3 over a resilient arm 116, having a facing of felt or other yielding material, said resilient arm being arranged to be somewhat deflected from its normal position by the pull exerted on the wire by the feed mechanism, thus imparting a suitable degree of tension to the wire. The inclination of the spool-holding spindle is such that the lower end of the spool is held by gravitation against a washer 117, interposed between it and the bracket 111, the frictional contact between the spool and washer imparting additional tension to the wire. At the same time the inclination of the spindle prevents the entire weight of the spool from being sustained by the washer, so that the frictional resistance is not excessive. The rotative connection between the guide-arm 108 and the socket 112 enables the lower end of said arm to swing from end to end of the spool, so that the wire passes freely from the spool to the arm.

118, Fig. 6, represents a gage member mounted on the gooseneck 1, and 119 a complemental gage member mounted on the jack 91 and movable vertically therewith. When the machine is to be adjusted to any given thickness of work, a sample pack of leaves is inserted between the gage members, the jack having been previously lowered to sufficiently separate the said members, and the jack is then raised until each gage member has a firm bearing on the pack. The upper face of the lower gage member is flush with the upper surface of the work-support, so that this operation insures the proper position of the work-support, the feed-arm, and the cutters for any work of the thickness of the pack between the gage members. The gage member 118 is preferably a roll journaled in bearings in fixed ears 120, while the member 119 is preferably a finger pivoted at 121 to a suitable part of the jack, its upper end being adapted to swing out from under the roll member 118. A spring 122 normally holds the member 119 in the position shown in Fig. 6. The pack of leaves is adapted to be drawn easily from between the gage members, the roll member rotating loosely and the finger member 119 swinging outwardly when the pack is being withdrawn.

The machine is provided with a pair of hand-operated wire-cutters to enable the operator to cut off the wire at any desired point, the cutters being inseparable from the machine, so that they cannot be misplaced or fraudulently removed from the machine. Said cutters comprise a fixed member 123, affixed to the arm 101 and having a suitable cutting edge, and a swinging member 124, pivoted to the fixed member and having a cutting edge, the two cutting edges being adapted to coöperate in severing a wire interposed between them when a swinging movement is imparted to the member 124.

In Fig. 30 we show an arm 125, pivoted at 126 to a fixed support and having at one end a finger 127. The arm is provided at opposite sides of the pivot 126 with projections 128 129, which are adapted to coöperate with the ends of a projection 130 on the cutter-carrying slide 28. When the cutters are adjusted to make the shortest staple, they are so close to the anvil that the free end of the wire projecting through the cutters toward the anvil is not long enough to so curl or warp that it will fail to properly engage the shoulders on the anvil; but when the cutters are adjusted to produce staples of about the maximum length they are separated so far from the anvil that the projecting end of the wire is liable to curl upwardly and fail to engage the shoulders 39 of the anvil. To prevent this difficulty is the object of the arm 125.

When the slide 28 is holding the cutters in position for the shortest staples, the arm 125 is held with the finger 127 retracted, as shown in full lines in Fig. 30. When the slide 28 is moved away from the anvil to increase the length of the staples, one end of the projection 130 acts on the projection 128 on the arm 125, turning said arm on its pivot and projecting the finger 127, as shown in dotted lines, the finger standing over the projecting end of the wire between the cutters and the anvil and preventing said end from curling upwardly. When the slide 28 is returned to the position shown in full lines in Fig. 30, the projection 130 acts on the projection 129 and swings the arm 130 outwardly, thus retracting the finger 127.

Having thus explained the nature of our invention and described a way of constructing and using the same, although without having attempted to set forth all the forms in which it may be embodied or all the modes of its use, we declare that what we claim is—

1. A stapling-machine comprising an anvil and staple bending and driving mechanism cooperating therewith, an oscillatory wire-feeding arm, and means coöperating therewith for alternately gripping and releasing the wire and for moving the feeding-arm positively forward and yieldingly backward, wire-cutters movable toward and from the anvil, an oscillatory adjust ng-arm having a stop adapted to limit the backward movement of the feeding-arm, connections between said arm and the cutters, and a device independent of the cutters and cutter-adjusting connections for moving said adjusting-arm, the said device being located above the staple bending and driving mechanism and cutters.

2. A stapling machine comprising an anvil and staple bending and driving mechanism cooperating therewith, wire-feeding mechanism

including first an oscillatory wire-feeding arm, secondly means for giving the same a positive forward movement, and a yielding backward movement, and thirdly means for alternately engaging the wire with and releasing it from the feeding-arm, a rock-shaft located above the bending and driving mechanism and having an adjusting-arm, a feeding-arm stop on said adjusting-arm which limits the backward movement of the feeding-arm, said rock-shaft and feeding-arm having a common center of oscillation, wire-cutters movable toward and from the anvil, and connections between the said cutters and the adjusting-arm, whereby the cutters and feeding-arm stop are adjusted simultaneously by a movement of the rock-shaft.

3. A stapling-machine comprising an anvil and staple bending and driving mechanism cooperating therewith, wire-feeding mechanism including first an oscillatory wire-feeding arm, secondly means for giving the same a positive forward movement, and a yielding backward movement, and thirdly means for alternately engaging the wire with and releasing it from the feeding-arm, a rock-shaft located above the bending and driving mechanism and having an adjusting-arm, a feeding-arm stop on said adjusting-arm which limits the backward movement of the feeding-arm, said rock-shaft and feeding-arm having a common center of oscillation, wire-cutters movable toward and from the anvil, connections between the said cutters and the adjusting-arm, whereby the cutters and feeding-arm stop are adjusted simultaneously by a movement of the rock-shaft, and means for adjusting the rock-shaft.

4. A stapling-machine comprising an anvil and staple bending and driving mechanism cooperating therewith, wire-feeding mechanism including first an oscillatory wire-feeding arm, secondly means for giving the same a positive forward movement and a yielding backward movement, and thirdly means for alternately engaging the wire with and releasing it from the feeding-arm, a rock-shaft located above the bending and driving mechanism and having an adjusting-arm, a feeding-arm stop on said adjusting-arm which limits the backward movement of the feeding-arm, said rock-shaft and feeding-arm having a common center of oscillation, a cutter-carrying slide movable toward and from the anvil, cutters carried by said slide and a stud carried by the adjusting-arm and having a sliding engagement with said arm, whereby a feed-stop-adjusting movement of the rock-shaft is caused to also adjust the slide and cutters.

5. A stapling-machine comprising an anvil and staple bending and driving mechanism cooperating therewith, an oscillatory wire-feeding arm having a wire-gripping jaw affixed to the arm and a gripping-jaw carried by the arm and movable toward and from the first-mentioned jaw, mechanism for operating the said movable jaw to cause the two jaws to alternately grasp and release the wire, a rock-shaft located above the bending and driving mechanism, and having an adjusting-arm, a feeding-arm stop on the adjusting-arm, said rock-shaft and feeding-arm having a common center of oscillation, mechanism for giving the feeding-arm a forward movement, means for giving the feeding-arm a yielding backward movement which is limited by the said stop, wire-cutters movable toward and from the anvil and connections between the said cutters and the adjusting-arm whereby the cutters and feeding-arm stop are adjusted simultaneously by a movement of the rock-shaft.

6. A stapling-machine comprising an anvil and staple bending and driving mechanism cooperating therewith, an oscillatory wire-feeding arm, feed-operating mechanism having provisions for giving said arm a forward movement, an adjustable stop for limiting the backward movement of the feeding-arm, an adjustable work-support, and means for simultaneously adjusting the work-support and stop.

7. A stapling-machine comprising an anvil and staple bending and driving mechanism cooperating therewith, an oscillatory wire-feeding arm, feed-operating mechanism having provisions for giving said arm a forward movement, an adjustable stop for limiting the backward movement of the feeding-arm, an adjustable work-support, a rock-shaft supporting the feeding arm and stop and rigidly connected with the latter, so that the stop is adjusted by movements of the rock-shaft, and connections between the work-support and rock-shaft whereby vertical movements of the support are caused to partly rotate the rock-shaft.

8. A stapling-machine comprising an anvil and staple bending and driving mechanism cooperating therewith, a wire-feed, feed-operating mechanism having provisions for giving the feed a forward movement, a wire-feed stop, and wire-cutters, both adjustable relatively to the anvil, adjusting mechanism having provisions for proportionally adjusting the feed-stop and the cutters, an adjustable work-support, and means for simultaneously adjusting the work-support and operating the proportional adjusting mechanism.

9. A stapling-machine comprising an anvil and staple bending and driving mechanism cooperating therewith, a wire-feed, feed-operating mechanism having provisions for giving the feed a forward and backward movement, a wire-feed stop to limit the backward movement of the feed, wire-cutters adjustable with said stop relatively to the anvil, proportional feed-stop and cutter-adjusting mechanism, a work-support, an adjustable jack carrying the work-support, means for adjusting the jack and work-support, and connections between

the jack and the proportional adjusting mechanism, whereby the latter is operated and the work-support adjusted simultaneously.

10. A stapling-machine comprising an anvil and staple bending and driving mechanism cooperating therewith, a wire-feed, feed-operating mechanism having provisions for giving the feed a forward and backward movement, a wire-feed stop to limit the backward movement of the feed, wire-cutters adjustable with the stop relatively to the anvil, proportional feed-stop and cutter-adjusting mechanism, a work-support, an adjustable jack carrying the work-support, means for adjusting the jack and work-support, operating connections between the jack and the proportional adjusting mechanism, clenchers carried by the jack and adjustable with the work-support, and clencher-operating mechanism, parts whereof are supported by the jack.

11. In a stapling-machine, the combination of a work-support having a staple-receiving throat, staple forming and driving mechanism above said throat, clencher-supporting levers pivoted at their lower ends to a support below the throat, clenchers pivoted to the upper ends of said levers and adapted to enter the throat, an operating-plate engaged with arms on the lower ends of said levers and adapted to oscillate the latter, and means for reciprocating said plate.

12. In a stapling-machine, the combination of a work-support having a staple-receiving throat, staple forming and driving mechanism above said throat, clencher-supporting levers pivoted to a support below the throat, clenchers pivoted to said levers and adapted to enter the throat, an operating-plate engaged with arms on said levers and adapted to oscillate the latter, a reciprocating arm adjacent to said plate, and a yielding connection between said arm and plate, whereby the clenchers are adapted to conform to the thickness of the work.

13. A stapling-machine comprising an anvil and staple bending and driving mechanism cooperating therewith, a slide movable toward and from the anvil, cutters carried by the slide, a wire-feeding arm having a segmental wire-guiding end and mounted to oscillate on a center with which said end is substantially concentric, an adjusting-arm mounted to oscillate on the same center and having a stop against which the feeding-arm is yieldingly held, the said stop being one-half as far from the said center as the segmental end of the feeding-arm, whereby when the adjusting-arm is moved, the segmental end of the feeding-arm is moved twice as far as the stop, connections between the cutter-supporting slide and the adjusting-arm adapted to give the cutters an adjusting movement equal to that of the stop, and a rock-shaft for moving the adjusting-arm.

14. A stapling-machine comprising an anvil, and staple bending and driving mechanism coöperating therewith, a slide movable toward and from the anvil, cutters carried by the slide, a rock-shaft journaled in fixed bearings, a feeding-arm mounted to oscillate loosely on the rock-shaft and having a segmental wire-guiding end substantially concentric with the rock-shaft, an adjusting-arm affixed to the rock-shaft and having a stop against which the feeding-arm is yieldingly held, the stop being one-half as far from the axis of the rock-shaft as the segmental end of the feeding-arm, connections between the cutter-carrying slide and the adjusting-arm, a work-support, a vertically-adjustable jack carrying the work-support, means for adjusting the jack, and connections between the jack and the rock-shaft, whereby movements of the jack are imparted to the adjusting-arm, cutters, and feeding-arm.

15. In a stapling-machine, a wire-feeding arm mounted to oscillate on a fixed center, mechanism for oscillating said arm, a pair of wire-grasping jaws, one affixed to the arm and the other movable thereon, a toggle-joint connecting the movable jaw with the arm, a spring which normally holds the toggle-joint in its broken position, and the movable jaw pressed against the wire, a jaw-opening device arranged to force the links of the toggle-joint into alinement and thus displace the movable jaw when the arm is at the end of its forward movement, and a stop arranged to break the toggle-joint when the arm reaches the end of its backward movement.

16. In a stapling-machine, a slide, wire-cutters carried thereby, one of said cutters being vertically movable, means for adjusting the slide to vary the position of the cutters, a vertically-movable cutter-operating slide having an elongated head which bears on the vertically-movable upper cutter and is in sliding contact therewith, and means for reciprocating the cutter-operating slide.

17. A pair of wire-severing cutters composed of a resilient metal strip the end portions of which constitute the cutting parts while the intermediate portion constitutes a spring which normally separates the cutters.

18. A pair of wire-severing cutters composed of a scroll-shaped resilient metal strip the end portions of which constitute the cutting parts, while the intermediate portion constitutes a spring which normally separates the cutters, one of said end portions being formed to engage a support while the other is formed to engage an operating device.

19. In a stapling-machine, a cutter-support, a resilient metal strip one end portion of which is engaged with the support and constitutes a fixed cutter, while the other end portion constitutes an upper movable cutter which is normally raised by the resilient intermediate or shank portion, an operating-slide having an elongated bead which bears on the upper cutter, and an operating-cam against which the operating-slide is held by said resilient shank.

20. In a stapling-machine, a cutter-support,

a resilient metal strip one end portion of which is engaged with the support and constitutes a fixed cutter, while the other end portion constitutes a movable cutter which is normally raised by the resilient intermediate or shank portion, means for depressing the movable cutter, and a resilient wire-guiding finger extending from the feed-arm to the resilient shank and coöperating with the latter in grasping the wire when the upper cutter is depressed.

21. In a stapling-machine, a pair of cutters composed of the end portions of a resilient strip, the intermediate or shank portion of which connects the cutters and normally raises one of the cutters, a support engaged with the other cutter, and a depressing device against which the first-mentioned cutter is yieldingly held by said shank, the cutters being separable from the support and depressing device and held in engagement therewith by the resilient shank.

22. A stapling-machine comprising an anvil, a staple bending and driving mechanism coöperating therewith, a work-support, a vertically-movable jack carrying the work-support, an adjustable connection between the jack and the frame of the machine, whereby the jack and work-support may be raised and lowered, a wire-feed mechanism, wire-cutting mechanism, and proportional feed and cutter adjusting mechanism operated by vertical movements of the jack.

23. A stapling-machine comprising an anvil, a staple bending and driving mechanism coöperating therewith, a work-support, a vertically-movable jack carrying the work-support, an adjustable connection between the jack and the frame of the machine, whereby the jack may be raised and lowered with the work-support, and a radius bar or strut jointed to the frame and to the lower portion of the jack and supporting the same laterally.

24. A stapling-machine comprising an anvil, and staple bending and driving mechanism coöperating therewith, a work-support, a vertically-movable jack carrying the work-support, an adjustable connection between the jack and the frame of the machine, whereby the jack may be raised and lowered with the work-support, a radius bar or strut jointed to the frame and to the lower portion of the jack, clenchers supported by the jack, a clencher-operating lever pivoted to the said radius-bar, connections between the lever and the clenchers, a clencher-operating cam, and connections between the cam and lever.

25. In a stapling-machine, a staple-receiving throat having inclined guides on opposite sides thereof, a reciprocating slide movable toward and from the said throat, pivoted levers engaged with the slide, and clenchers located wholly below said guides and pivoted to the levers and coöperating with the inclined guides.

26. In a stapling-machine, a flat work-support composed of two sections, a holder for said sections, hinge connections between the holder and the rear portions of the sections, and means for supporting the swinging ends of the sections when they are in their operative positions, said hinge connections having provisions for permitting the sections to first swing edgewise, out of engagement with the said supporting means, and then downwardly.

27. In a stapling-machine, a saddle-shaped work-support composed of two sections hinged to a suitable holder, and means for locking the sections in their raised operative position, the sections being arranged to swing in the same plane and to abut together at their inner ends when raised, said abutting ends being on the center line of the machine.

28. In a stapling-machine, a saddle-shaped work-support composed of two sections hinged to a suitable holder at points on opposite sides of the center line of the machine, the inner ends of said sections being arranged to abut together on the center line of the machine when the sections are raised to their operative positions, and to form supports for a flat work-support when the sections are released from their operative positions.

29. A stapling-machine having staple forming and driving mechanism, a staple-receiving throat, and two divided interchangeable work-supports each composed of separable sections hinged to the frame of the machine and having their meeting edges on the center line of the machine and intersecting said throat, the sections of each support being displaceable to afford room for the sections of the other support.

30. In a stapling-machine, the combination with a staple bender and driver, of a presser-foot having a segmental guide, and a segmental anvil-carrier movable by gravitation in said guide and having a wire-supporting anvil which stands normally in an operative position under the center of oscillation of the carrier, said center being in the path of the bender.

31. In a stapling-machine, a presser-foot having a segmental guide, a segmental anvil movable by gravitation in said guide and having wire-supporting shoulders which are operative when the anvil is in its normal position, the anvil having a plurality of inclined faces, a reciprocating bender adapted to cooperate with one of said faces in partly displacing the anvil to remove the said shoulders from the formed staple, and a reciprocating driver, another inclined face on the anvil being arranged to cause the driver to force the anvil out of the path of the driver.

32. In a stapling-machine, a presser-foot having a segmental guide, a segmental anvil movable by gravitation in said guide and having wire-supporting shoulders which are operative when the anvil is in its normal position, the anvil having two horns with inclined outer faces and an inclined face between said horns, a bender having grooves to receive the legs of a staple, and an interme-

diate finger to coöperate with the face between the staple-prongs in forcing the shoulders of the anvil out of the path of the formed staple, and a driver movable in the grooves of the bender, the inclined outer faces of the anvil-horns being in the path of the driver, so that the latter in descending displaces the anvil.

33. A stapling-machine, comprising wire-feeding mechanism and staple forming and driving mechanism, an inclined spool-supporting spindle, a frictional bearing-surface at the base of said spindle, an oscillatory wire-guiding arm journaled at one end above the spool-support and a wire-guide between the journaled end of said arm, and the feeding mechanism, the inclination of the spindle causing the spool to remain in place on the spindle and to bear by gravitation on the said frictional bearing-surface without permitting said surface to sustain the entire weight of the spool.

34. In a stapling-machine, an inclined spool-support, and a curved oscillatory wire-guiding arm journaled at one end in a fixed bearing, which is elevated above the spool-support, its other end being arranged to swing beside the spool-support, wire-feeding mechanism, and a wire-guide between the journaled end of the oscillatory guiding-arm and the feeding mechanism.

35. In a stapling-machine, a spool-support, a fixed bearing adjacent to the said support and having a longitudinal slot, and a curved wire-guiding arm mounted to rock at one end in said bearing and having a wire-guiding groove which is normally out of alinement with the slot in the bearing.

36. In a stapling-machine, a spool-support, a fixed bearing adjacent to said support, a wire-guiding arm mounted to rock at one end in said bearing, its other end being arranged to oscillate beside the spool-support, a wire-feeding device, and a resilient tension-arm interposed between the wire-guiding arm and the feeding device, and provided with a facing of yielding material.

37. A stapling-machine having a work-support adjustable toward and from a gage-roll, and a pivoted gage member movable with the work-support and arranged to coöperate with the gage-roll, said pivoted gage member being held yieldingly in its operative position.

38. In a stapling-machine, the combination with the anvil and the cutters and their supporting-slide movable toward and from the anvil, of a holding-down device movable over the wire between the cutters and anvil, and means operated by the supporting-slide for projecting and retracting the same.

In testimony whereof we have affixed our signatures in presence of two witnesses.

THOMAS A. BRIGGS.
THOMAS BARRETT.

Witnesses:
C. F. BROWN,
A. D. HARRISON.