United States Patent [19]

Andersson et al.

[11] **Patent Number: Des. 316,899**

[45] **Date of Patent: ** May 14, 1991**

[54] **TWO-CHAMBER INJECTOR**

[75] Inventors: **Ake B. Andersson**, Onsala; **Kjell I. Wellenstam**, Gothenburg, both of Sweden

[73] Assignee: **Astra Meditec AB**, Molndal, Sweden

[**] Term: **14 Years**

[21] Appl. No.: **158,988**

[22] Filed: **Feb. 18, 1988**

[30] **Foreign Application Priority Data**

Sep. 1, 1987 [SE] Sweden 871923

[52] **U.S. Cl.** **D24/24**

[58] **Field of Search** D24/24, 26, 63; 604/416, 415, 197, 88, 90, 69, 70, 71, 191, 136; 206/364, 365

[56] **References Cited**

U.S. PATENT DOCUMENTS

D. 304,616	11/1989	Dunlap et al.	D24/24
3,636,950	1/1972	Gomez et al.	604/416
3,688,765	9/1972	Gasaway	604/70
3,946,732	3/1976	Hurseham	604/88

Primary Examiner—Stella Reid

Attorney, Agent, or Firm—White & Case

[57] **CLAIM**

The ornamental design for a two-chamber injector, as shown.

DESCRIPTION

FIG. **1** is a top perspective view of a two-chamber injector, showing our new design;

FIG. **2** is a bottom perspective view thereof; and

FIG. **3** is a side elevational view thereof.

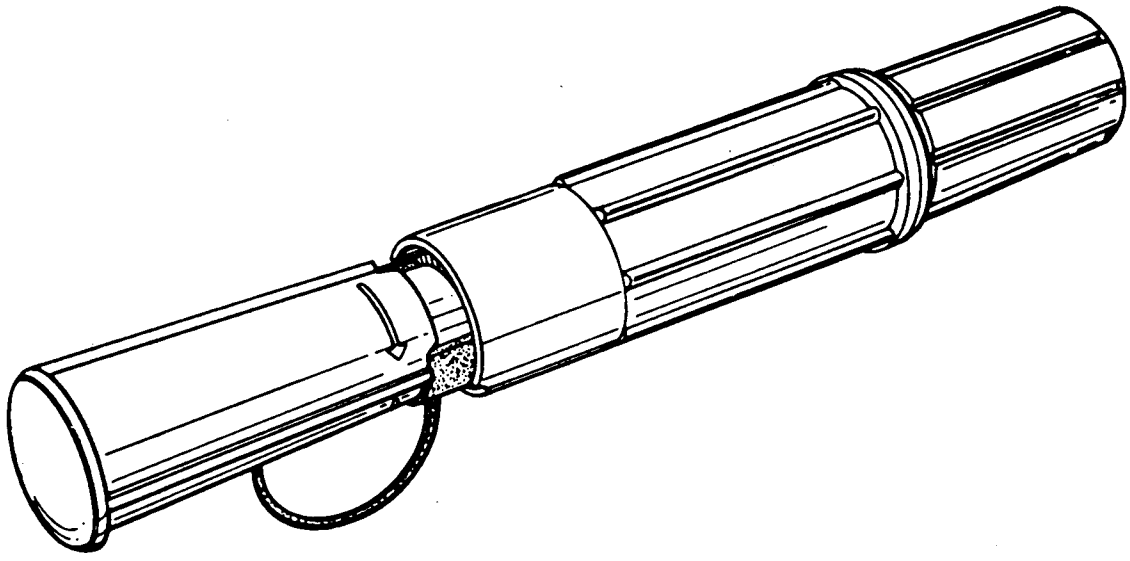

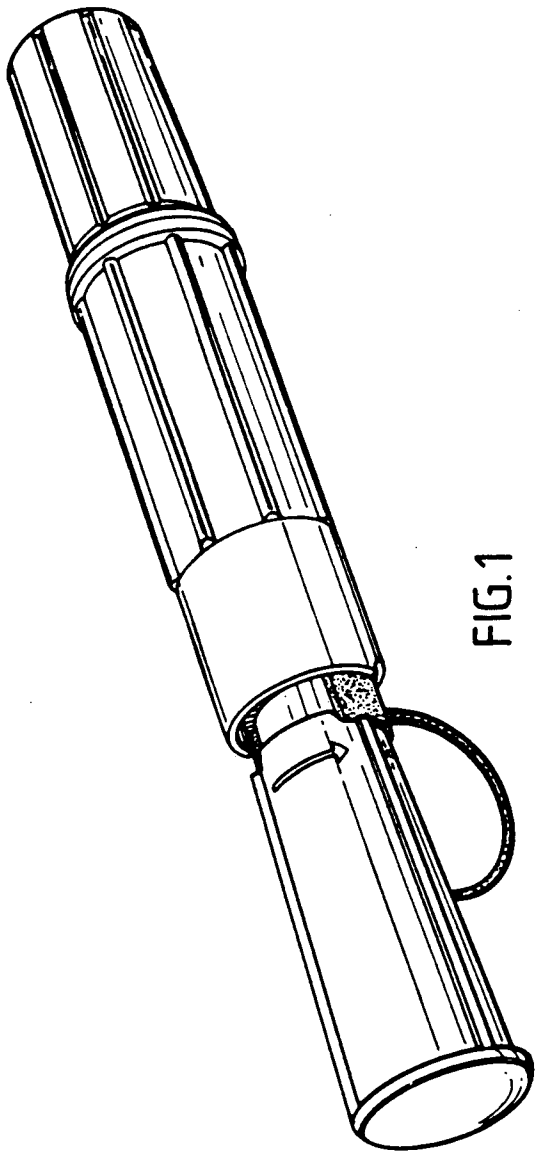

FIG.1

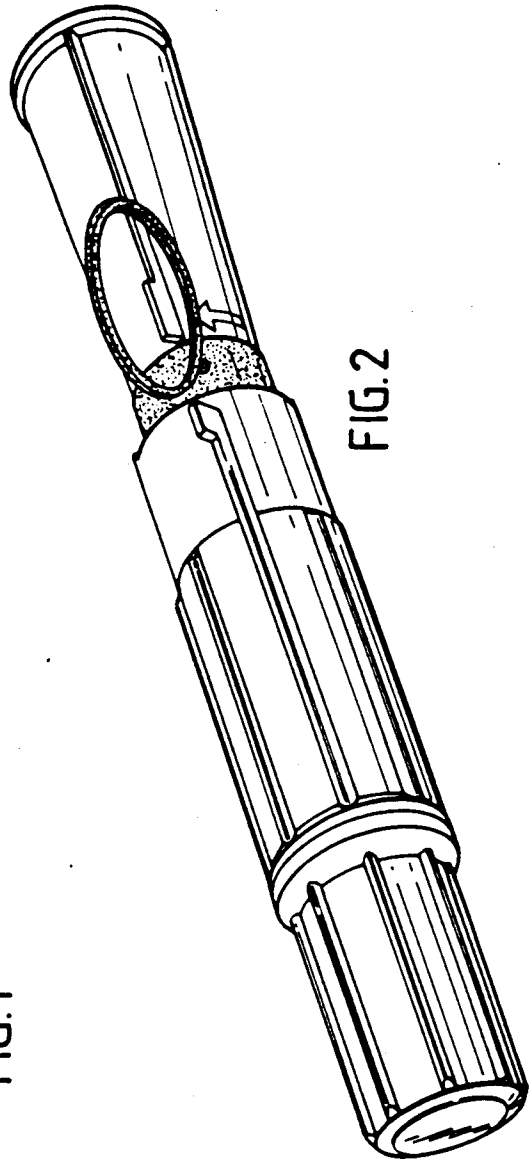

FIG.2

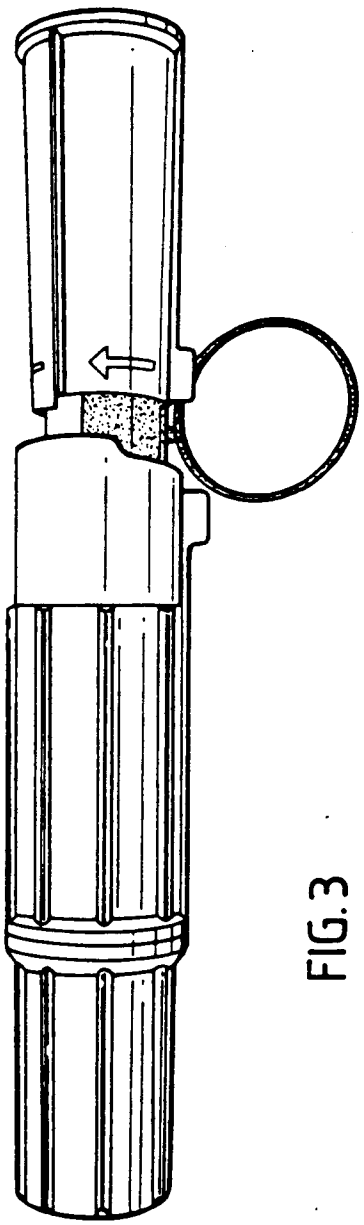

FIG.3