Dec. 15, 1936. B. B. GRAY 2,063,921

AIR COOLER

Filed Aug. 15, 1935

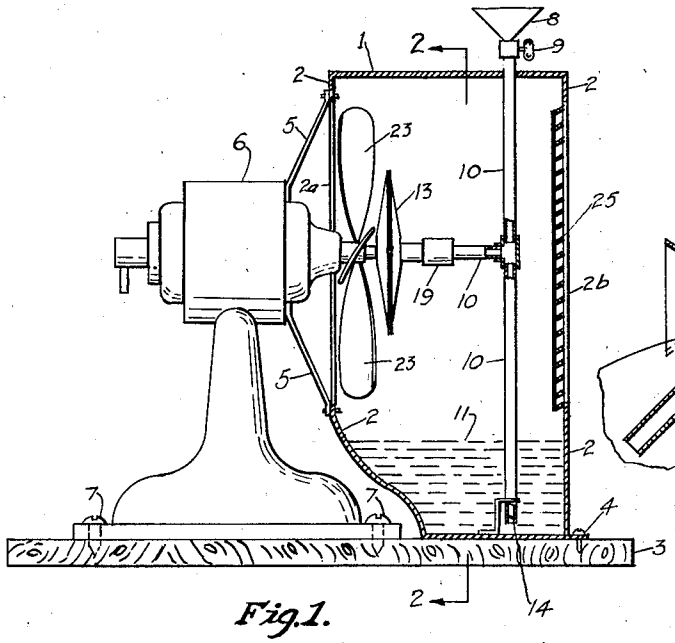

Fig.1.

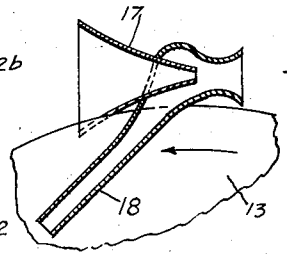

Fig.5.

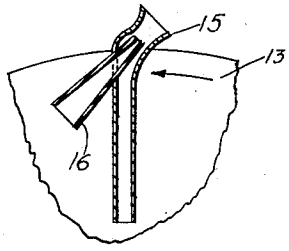

Fig. 4.

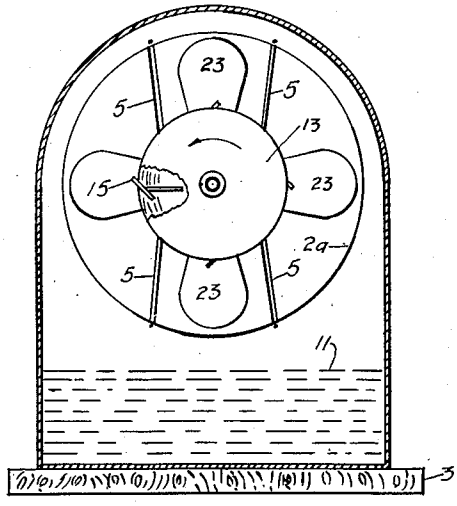

Fig.2.

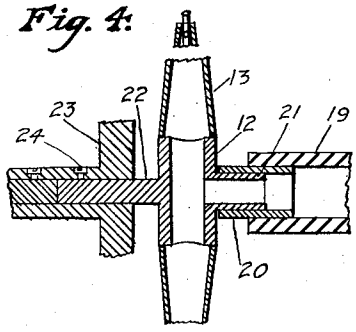

Fig.3.

INVENTOR
Briscoe B. Gray
Wm F Doyle
atty.

Patented Dec. 15, 1936

2,063,921

UNITED STATES PATENT OFFICE

2,063,921

AIR COOLER

Briscoe B. Gray, Washington, D. C.

Application August 15, 1935, Serial No. 36,330

7 Claims. (Cl. 261—29)

(Granted under the act of March 3, 1883, as amended April 30, 1928; 370 O. G. 757)

The invention described herein, if patented, may be manufactured and used by or for the Government for governmental purposes without the payment of any royalty thereon.

My invention relates to improvements in the means whereby water may be atomized and air blown through the same for the purpose of cooling, cleaning and humidifying the air, employing to a large extent the principle of decreased latent heat due to evaporation.

In general most of the manufactured devices of this nature and for this purpose are relatively complicated and expensive. Such devices also cannot be readily adapted to household and commercial types of fans.

It is, therefore, the object of my invention to provide a simple means for lifting water from a reservoir contained in the bottom of a casing, open at both ends and constructed over the blades of a stock type fan, through a central hub to a revolving chamber where it is ejected, by centrifugal force, in a fine spray within the said casing. Air is then blown through the casing by the aforesaid fan, and any excess moisture entrained therein is removed by the baffles located at the casing outlet. The principle employed in lifting the water from the bottom of casing is by suction or decreased pressure produced within the aforesaid revolving chamber occasioned by the ejection of water therefrom by centrifugal force.

A further object of my invention consists in the method of priming the revolving chamber with water. This is accomplished by two means, namely: (1) manually opening a valve in the water line leading to the revolving chamber and filling the same with water, or (2) where the fan is of sufficient speed and size by reducing the pressure within the revolving chamber by means of specially designed nozzles located on the periphery thereof, whereby a flow of air is produced through said nozzles due to the movement of the fan.

Another object of my invention, where the priming is by manual means, is the placing of aspirators actuated by the flow of water produced by centrifugal force near the outer edges of the revolving chamber with one of the connecting tubes thereof extending near the center of said revolving chamber for eliminating any air which may have seeped into it, and would otherwise be sealed therein, due to the fact that the centrifugal force of the water would not permit the air to escape through the openings located on the periphery of the revolving chamber.

I attain these objects by mechanical mechanisms illustrated in the accompanying drawing in which—

Fig. 1 is an elevational view of the apparatus with the casing thereof shown in section.

Fig. 2 is a sectional view of a part of the apparatus on the line 2—2 of Fig. 1.

Fig. 3 is a sectional view of the hub and revolving chamber.

Fig. 4 is a sectional view of an aspirator located on the periphery of the revolving chamber.

Fig. 5 is a sectional view of a priming device.

The air conditioner shown in the drawing is a portable unit of a capacity to condition the air in a single room and comprises a casing 1 which is semi-oval in cross section, and designed at one end so that it will conform, to some extent, to the contour of the base of an ordinary household electric fan. This casing is constructed with parallel annular flanges 2 at both ends, thus providing a reservoir for the water in the bottom thereof, and an air inlet 2a and air outlet 2b. The casing is rigidly fastened to a base 3 constructed of wood or other material by screws 4 and to the outer ends of the guard supports 5 by a household type fan 6. The household type fan is also rigidly fastened to the wood base by screws 7.

The circulation of water for atomizing within the casing is accomplished as follows: While the fan is in motion the system is primed by pouring water into the funnel 8 and then opening the pet-cock 9. The water runs down the tube 10 which is in the form of a T with one end extending into the reservoir 11, filling the same through the hub 12 and into the revolving chamber 13. The water is kept from running out at the lower portion of the tube 10 by a check valve 14. After the system is primed the pet-cock is closed and water is then automatically drawn from the reservoir 11 due to the suction caused by the ejection of water from the tubes 15 caused by centrifugal force.

As the centrifugal force exerted on the water within the revolving chamber 13 constrains it to the periphery thereof, any air that may be sucked into the system cannot escape, and in time there would be a sufficient quantity to stop the flow of water as the centrifugal force exerted on air within the revolving chamber 13 is negligible. In order to overcome this difficulty, aspirators, illustrated in Fig. 4 are installed on the periphery of the revolving chamber 13, with a hollow member 15 extending near the center of said revolving chamber. The water in the revolving chamber is forced out the nozzle 16 which in turn

sucks out the air in the system through the tube 15.

When a large high speed fan is used the aspirators and the manual priming feature of this apparatus may be eliminated and in lieu thereof priming devices, illustrated in Fig. 5, and operated upon the principle of a boiler injector are constructed on the periphery of the revolving chamber 13. These priming devices consist of a conical nozzle 17 with the base thereof facing the direction of revolution so that the air when passing through it will attain a high velocity at the throat, thus ejecting both air and water from the revolving chamber 13 through the tube 18.

In connection with this apparatus, provision has to be made for a union between the revolving and stationary members at the hub 12. This is accomplished by a flexible coupling 19 secured to the stationary tube 10 which is fitted over a sleeve 20. This sleeve in turn fits over the hollow projection 21 on the tube 12.

In order to fasten the revolving elements of this apparatus to the fan 6 a shaft 22 comprising an integral part of the hub 12 is fitted into the center of the fan blade 23 and held in position by set screw 24.

When air is blown through the apparatus the excess moisture entrained therein is removed by the baffles 25 located at the casing outlet.

Having thus described my invention, what I claim and desire to secure by Letters Patent is:

1. An air conditioner comprising a casing having an air inlet and outlet opening, the inlet opening being adapted to be positioned adjacent a rotary fan whereby air is introduced and carried through the casing, a chamber mounted on a rotary member in said casing forward of the fan, a line extending therefrom to a water reservoir located in the bottom of said casing, and a plurality of aspirators inserted around the perimeter of the aforesaid chamber attached to the rotary member for the purpose of ejecting air and water vapor from the same.

2. An air conditioner comprising a casing having an air inlet and outlet opening, the inlet being adapted to be positioned adjacent a rotary fan whereby air is introduced and carried through the casing, a chamber mounted on a rotary member in said casing forward of the fan, a plurality of aspirators inserted around the perimeter of the aforesaid chamber, a line extending from said member to a water reservoir located in the bottom of the casing, and a flexible union inserted in the line leading to the water reservoir in the bottom of the casing for the purpose of allowing for misalignment between the rotary member and the stationary water line.

3. An air conditioner comprising a casing having an air inlet and outlet opening, a rotary fan adjacent the inlet opening, a rotary chamber mounted forward of the fan, a line extending therefrom with a flexible union in the same to a water reservoir located in the bottom of said casing, and a plurality of aspirators inserted around the perimeter of the aforesaid chamber; each aspirator having a port member located outside the chamber facing counter to the direction of rotation of the fan so that a partial vacuum would be created at said opening for the purpose of inducing water to flow into the chamber and prime the same.

4. An air conditioner comprising a casing having an air inlet and outlet opening, a rotary fan adjacent the inlet opening, a rotary chamber mounted forward of the fan, a line extending therefrom with a flexible union in the same to a water reservoir located in the bottom of said casing, and a plurality of aspirators inserted around the perimeter of the aforesaid chamber; each aspirator being constructed upon the principle similar to a steam boiler injector and having an open throat portion or mouth where a partial vacuum is created, and a conical member located outside the aforesaid chamber with the base of the cone facing the direction of rotation of the fan and with the apex terminating in the throat portion of the said aspirator so that the velocity of the air passing through the said throat will augment the vacuum created at the aforesaid mouth. and thus induce liquid to flow into the chamber and prime the same.

5. An air conditioner comprising a casing having an air inlet and outlet opening, a rotary fan adjacent the inlet opening, a rotary chamber mounted forward of the fan, a line extending therefrom with a flexible union in the same to a water reservoir located in the bottom of said casing, and a plurality of aspirators inserted around the perimeter of the aforesaid chamber; each aspirator being constructed upon the principle similar to a steam boiler injector, having an open throat portion or mouth where a partial vacuum is created, and a conical member or nozzle inside the said chamber which is inserted into a tube leading from the center portion of the chamber through the periphery thereof to the aforesaid mouth with the apex thereof terminating in the throat portion of the aspirator so that the velocity of the liquid, caused by centrifugal force, passing through the said throat will augment the vacuum created at the mouth of the aspirator and thus eject any air and water vapor or liquid which might have become entrapped in and constrained to the center location of the aforesaid chamber.

6. An air conditioner comprising a casing having an air inlet and outlet opening, a rotary fan adjacent the inlet opening, a rotary chamber mounted adjacent the fan, a line extending therefrom with a flexible union to a water reservoir, a plurality of aspirators inserted around the perimeter of the aforesaid chamber, each of said aspirators having an open end conduit extending from the mid portion of the rotary chamber through the periphery thereof, and an adjacent open end conduit with the entrance located inside and near the perimeter of said rotary chamber inserted into the first conduit, whereby the velocity of the liquid, caused by centrifugal force passing through the contracted portion of the said first conduit, will create a vacuum therein.

7. An air conditioner comprising a casing having an air inlet and outlet opening, a rotary fan adjacent the inlet opening, a rotary chamber mounted adjacent the fan, a line extending therefrom with a flexible union to a water reservoir, a plurality of aspirators inserted around the perimeter of the aforesaid chamber, each of said aspirators having a main open end conduit extending from within the rotary chamber through the periphery thereof, and an open end conduit located outside the said chamber connecting and inserted into the main conduit, whereby the velocity of air or gas caused by the rotating of the chamber passing through a neck portion of the main conduit will create a vacuum therein.

BRISCOE B. GRAY.