Aug. 21, 1934. A. G. LEAKE 1,970,966

METHOD OF REENFORCING BEAMS AND GIRDERS UNDER LOAD

Filed July 15, 1932

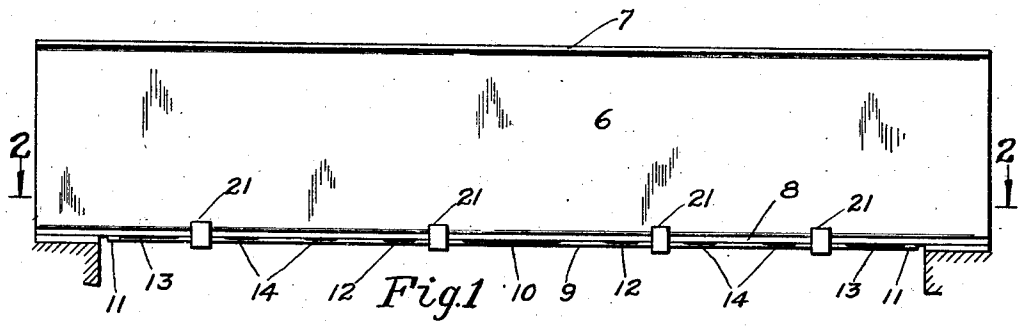

Fig.1

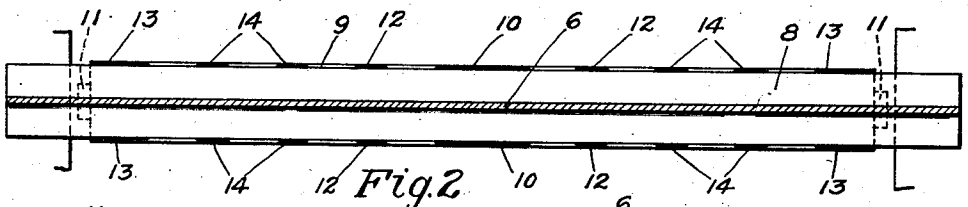

Fig.2

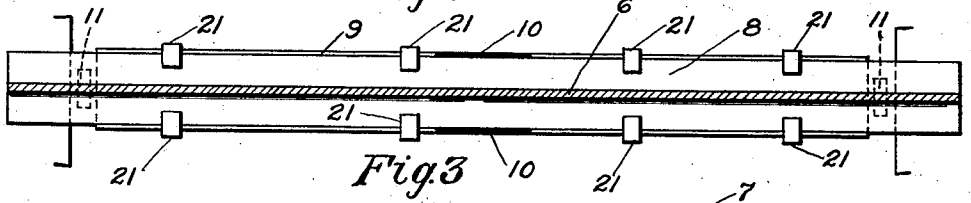

Fig.3

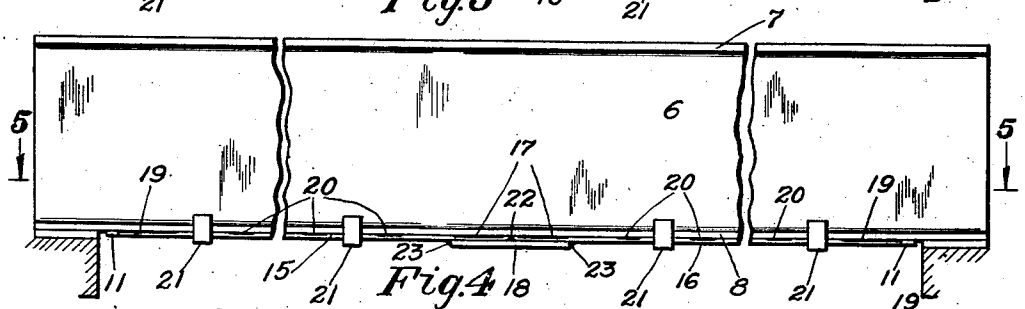

Fig.4

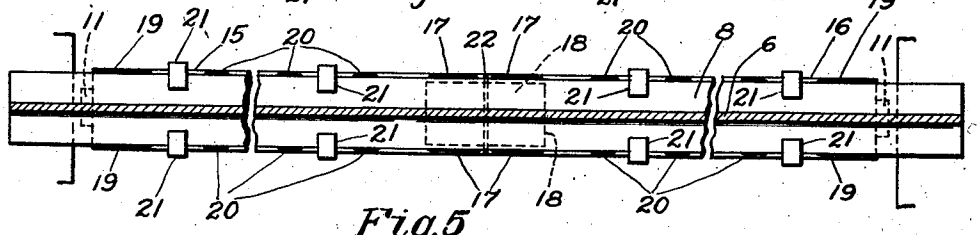

Fig.5

Inventor

Arthur G. Leake

By Wooster & Davis

Attorneys.

Patented Aug. 21, 1934

1,970,966

UNITED STATES PATENT OFFICE

1,970,966

METHOD OF REENFORCING BEAMS AND GIRDERS UNDER LOAD

Arthur G. Leake, Bridgeport, Conn.

Application July 15, 1932, Serial No. 622,598

4 Claims. (Cl. 29—155)

This invention relates to a method of strengthening or reenforcing structural members such as beams, girders and the like while they are under load, and has for an object to provide a method of strengthening such members which method will not require the removal of concrete or other structures supported by the member to be strengthened, and therefore the work may be accomplished in a much shorter time and at a much less expense, and where traffic is involved will not require the holding up of over head traffic and will reduce interference with other traffic to a minimum.

With the foregoing and other objects in view, as will appear as the description proceeds, the invention comprises certain improvements in the method disclosed in my prior Patent No. 1,770,932 of July 22, 1930.

In the drawing:

Fig. 1 is a side elevational view of a girder or supporting member, as an I-beam, reenforced or strengthened in accordance with the method of the present invention;

Fig. 2 is a sectional view taken substantially along the line 2—2 of Fig. 1;

Fig. 3 is a view somewhat similar to Fig. 2 and showing a step in the method;

Fig. 4 is a view somewhat similar to Fig. 1 but illustrating a slight modification which it is desirable to introduce when a relatively long beam or girder is being strengthened or reenforced; and

Fig. 5 is a section view taken substantially along the line 5—5 of Fig. 4.

The method of the present invention is particularly adapted for reenforcing or strengthening plate and angle girders and rolled steel sections while under load although it is not necessarily limited to such use. In the drawing, I have shown the method as employed in strengthening I-beams and it will be appreciated that the method may be used for strengthening a girder built up of plates and angle bars and also for strengthening angle and channel bars. Further, it will be understood that the method may be easily adapted for reenforcing or strengthening other shapes.

Referring in detail to the drawing, and at first particularly to Figs. 1, 2 and 3 thereof, I have shown the method as employed in the strengthening or reenforcing of a structural member comprising an I-beam including a web portion 6 and upper and lower flanges 7 and 8. While the flanges 7 and 8 are here shown as formed or rolled with the web 6 it will be understood that said flanges may be formed by riveting angle bars to the upper and lower edges of the web or plate 6, and it will further be understood that the invention is described in connection with an I-beam only for the purpose of making clear one use of the invention and that the invention may be employed in connection with other forms of structural members.

It will be understood that the lower portion of the girder and particularly the flange 8 thereof will be under tension when a load is supported on the upper flange 7 of the girder. This load may be in the form of a roadway or other structure supported above railroad tracks or the like, or girders and beams in buildings, bridges, etc. My improved method may be used for strengthening this girder without the necessity of removing or jacking up the load normally supported by the girder, and it will therefore be seen that when the girder is being used to support a roadway or the like or in a bridge there will be no need to interfere with traffic using the roadway or bridge.

The invention is herein disclosed particularly as employed in the strengthening of the lower flange 8 of the girder or other support. In practising the invention, I employ a metal strengthening member 9 which may be in the form of a rolled steel plate of proper length, width and thickness. This strengthening member or plate 9 is disposed against the underside of the flange 8 and the central or intermediate portion of the plate is welded to the flange as at 10. The plate may be held against the flange during the securing operation by any suitable means such for example as clamps 21 or other holding means. Either prior to or after the welding of the central portion of the plate 9 to the flange 8 suitable stops or markers 11 may be secured to the under side of the flange 8 in such spaced relation that the ends of the strengthening member or plate 9 will be spaced from them when the said member is arranged in position and before it is welded to the flange as above described. The space or distance between the stops or markers 11 and the ends of the plate or member 9 is clearly shown in Fig. 3 and this space or distance represents the distance the plate or strengthening member must be expanded to place it under the proper tension or stress as will later be fully described.

This welding of the plate 10 causes an expansion of the plate due to the heating of the plate in the welding operation and this expansion may be sufficient to cause the ends of the plate to engage the stops or blocks 11. When this occurs the ends of the plate are then welded to the flange while the plate is hot and expanded. With a

somewhat heavy, thick and relatively longer plate the single weld 10 may not be sufficient to cause the plate to expand the required extent. In such a case the welding of the plate is continued, working outwardly in both directions from the center weld 10 and as soon as the ends of the plate engage the stops 11 the said ends are welded to the flange 8.

From the foregoing it will be seen that the heat necessary for welding is used to expand the plate and thus in some cases a separate heating operation for the purpose of expanding the plate is dispensed with. Where the plate is long and relatively heavy the heating required to expand the plate is greatly reduced as a separate operation since a considerable portion of the necessary expansion results from the heat employed in the welding operation. It will thus be seen that costs and particularly labor costs are materially reduced.

As above pointed out Fig. 3 shows the plate 9 centrally welded to the lower flange 8 of the girder and when this central weld does not cause the ends of the plate to engage the stops 11 the welders work outwardly toward the ends of the plate from the weld 10 and may next weld as at 12 in Figs. 1 and 2. As soon as the ends of the plate engage the stops 11, these ends are then welded to the flange as at 13 and the portions of the plate between the completed welds are later tack welded or welded for their entire lengths to the flange as at 14. However, before these intermediate welds are made the plate is permitted to cool to a normal temperature and this places the plate under tension or an initial stress depending on the portion of the load which is to be carried by the plate. This stress or tension is determined by the amount to which the plate is expanded before its ends are welded as at 13.

Attention is directed to the fact that as the strengthening plate 9 is placed under an initial stress it will carry its share of the load without the girder sinking and therefore this reenforcing or strengthening member immediately assumes its share of the load relieving the strain on the flange 8. It is also to be noted that by the described method the initial stress is put on the strengthening member without the necessity of jacking up the beam or girder and structure supported thereby, with the attendant high expense. It is further to be noted that the head room is not reduced beyond the thickness of the reenforcing member.

Figs. 4 and 5 show the method as employed in strengthening or reenforcing a relatively long beam or girder where owing to its length and weight a single reenforcing element for application to the lower flange 8 could not be conveniently handled. In these views two plates 15 and 16 are secured to the underside of the flange 8. The plates 15 and 16 are arranged in end to end relationship and the adjacent ends are welded to the flange 8 and to each other as indicated at 22 and the sides adjacent said ends are welded to the flange as at 17. A splice plate 18 may be welded over these adjacent ends of the plates 15 and 16 as at 23 and also along the side edges, and the combined length of these plates 15 and 16 at their normal temperatures is such that their outer ends will be spaced the required distance from the stops or blocks 11 secured (preferably welded) to the under side of the flange 8. The heat used in the welding operations at 17, 22 and 23 will, of course, be conducted along the plates 15 and 16 and toward their outer ends causing these plates to expand.

When sufficient expansion takes place in the making of the welds at 17 and 22 and in the welding of the splice plate the welders immediately move to the outer ends of the plates 15 and 16 and weld said outer ends to the flange 8 as at 19. When the initial welding operations do not cause a sufficient expansion of the plates 15 and 16 the welding may be continued working outwardly from the initial welds 17 toward the ends of the plates and when the outer ends or remote ends of the plates abut the stops 11 these said ends are welded in place as at 19. If desired, and particularly when working with heavy strengthening plates, some additional heat may be required to cause the plates 15 and 16 to expand the amount required to give them the proper tension. After the welds 17 and 19 are made the plates 15 and 16 are allowed to cool and return to their normal temperature after which they are welded together between the previous welds, as by the tack welds 20 or continuously along the edges of the plate.

It will now be appreciated that according to the present invention the heat required in a welding operation is used to expand the strengthening plate and that in some instances, as when working with small or relatively thin plates, heating of the plates as a separate operation is entirely dispensed with. When a strengthening plate is relatively large some heat in addition to that supplied by the welding operation may be required although the amount required will be greatly reduced. This, of course, results in substantial savings. As the initial weld is made centrally of or intermediate the ends of the strengthening plate the applied heat is most effective in bring about an expansion or elongation of the plate.

When it is necessary to apply heat other than that used in a welding operation the plate may be heated by striking an arc with the welding pencil and placing its end against the plate and permitting it to stick in place and then sending through sufficient current to heat the pencil red hot and cause the plate to expand. Also, a carbon pencil may be used in the holder and an arc struck to the plate and this arc may be moved along the plate to heat the latter. In such an instance it would be necessary that the heat applying means be moved rather rapidly since otherwise the plate would be melted. However, it will be understood that in any event the welders work from the initial weld as at 10 in Figs. 1 through 3 and the splice in Figs. 4 and 5 and work toward the outer ends of the strengthening member which outer ends are welded to the flange or other structural member as soon as the strengthening member has expanded the required distance, which distance may be determined by engagement of said ends with the stop members 11. The strengthening members are then permitted to cool and after cooling are welded or secured to the flange at the desired number of points or continuously, if desired, intermediate the first welds.

Having thus set forth the nature of my invention, what I claim is:

1. A method of strengthening a structural member while it is under load which comprises welding a strengthening member at a point between and spaced a material distance from its ends to said structural member so that the heat of the welding operation will be conducted along the strengthening member in both directions from

the weld to change the length of this member to approximately the length it will be when under load, welding the strengthening member to the structural member adjacent its opposite ends and while the length of the strengthening member is so changed, permitting the latter member to return to a normal temperature, and after it has reached this temperature welding it to the structural member at points between the other welds.

2. A method of strengthening a structural member while it is under load which comprises disposing a pair of strengthening members against the structural member and in end to end relation, welding the adjacent ends of the strengthening members to the structural member and to each other, welding a splice plate over the said adjacent ends of the strengthening members, the ends being of sufficient length that the heat of said welding operations changes the lengths of the strengthening members to approximately the lengths they will be when under load, welding the remote ends of the strengthening members to the structural member while the lengths of said strengthening members are so changed, permitting the latter members to return to a normal temperature, and after they have reached this temperature welding them to the structural member at points between the other welds.

3. A method of strengthening a structural member while it is under load which comprises welding a strengthening member to the structural member at a point intermediate and spaced from the ends of the former, welding the members at other points beginning at said first weld and working outwardly toward the ends of the strengthening member with welds of sufficient length that the heat of the welding operations changes the length of the strengthening member to approximately the length it will be when under load, welding the ends of the strengthening member to the structural member while the length of said strengthening member is so changed, permitting the latter member to return to normal temperature, and after it has reached this temperature welding it to the structural member at points between the other welds.

4. A method of strengthening a structural member while it is under load which comprises welding one end portion of a strengthening member to the structural member, welding said members together beginning at the first weld and working toward the other end of the strengthening member with welds of sufficient length that the heat of the welding operation changes the length of the strengthening member to approximately the length it will be when under load, welding the other end of the strengthening member to the structural member while the length of the strengthening member is so changed, and then welding the members together at points inwardly of the second end weld.

ARTHUR G. LEAKE.