SIEMENS AKTIENGESELLSCHAFT **No. of Sheets: 1**
IP No. /DELNP/2014 **Sheet No.: 1**

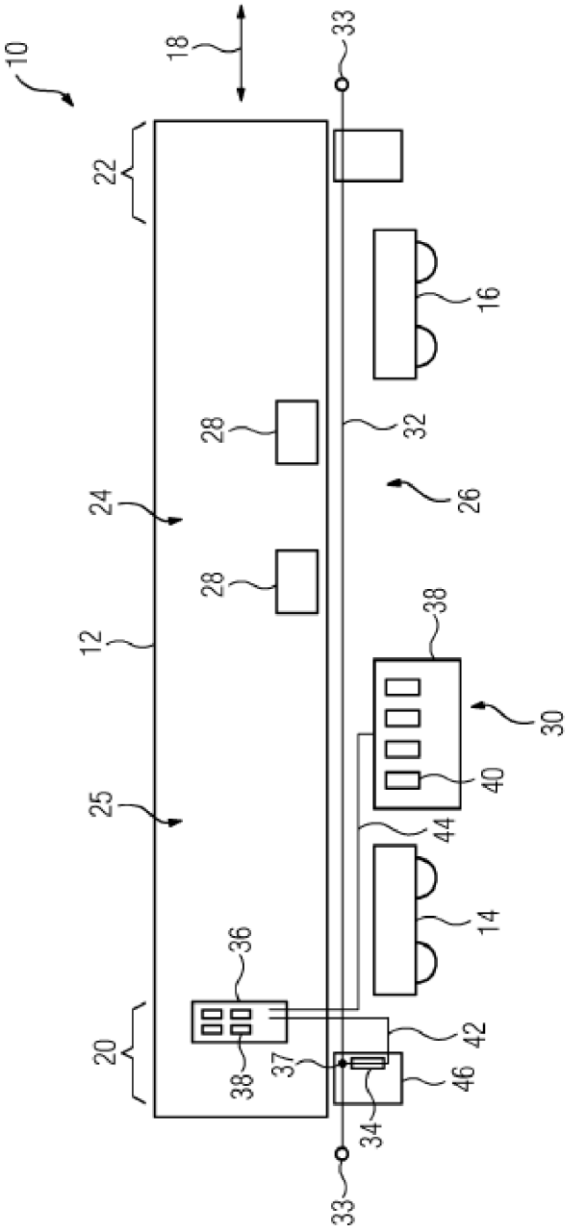

FIG. 1

Mahendra P. Bhatnagar

M. P. BHATNAGAR
OF BHATNAGAR & ASSOCIATES
AGENT FOR THE APPLICANT