J. GABEL.

AUTOMATIC TALKING MACHINE.

APPLICATION FILED AUG. 18, 1909.

1,182,551.

Patented May 9, 1916.

7 SHEETS—SHEET 1.

FIG. 1.

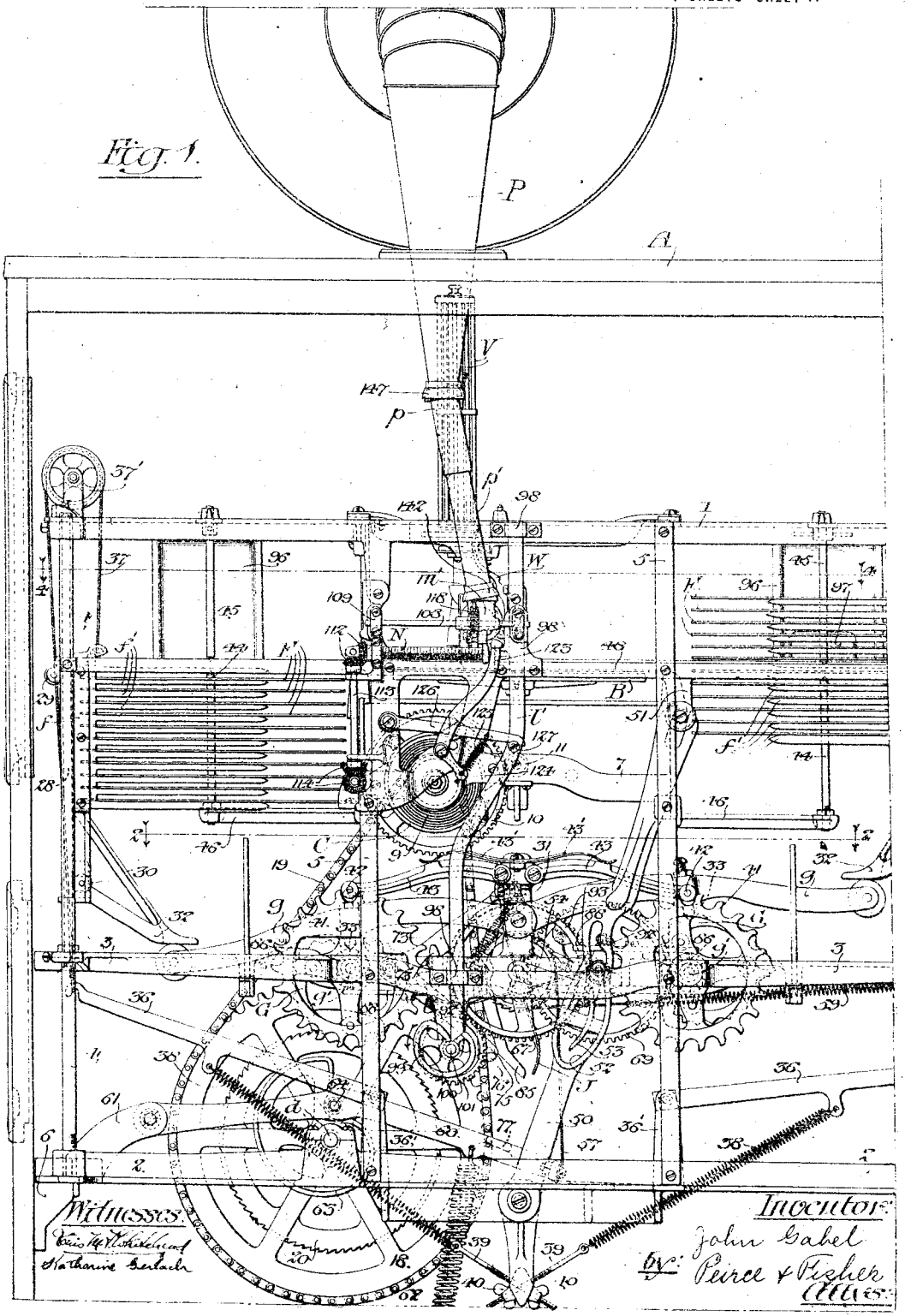

J. GABEL.

AUTOMATIC TALKING MACHINE.

APPLICATION FILED AUG. 18, 1909.

1,182,551.

Patented May 9, 1916.

7 SHEETS—SHEET 2.

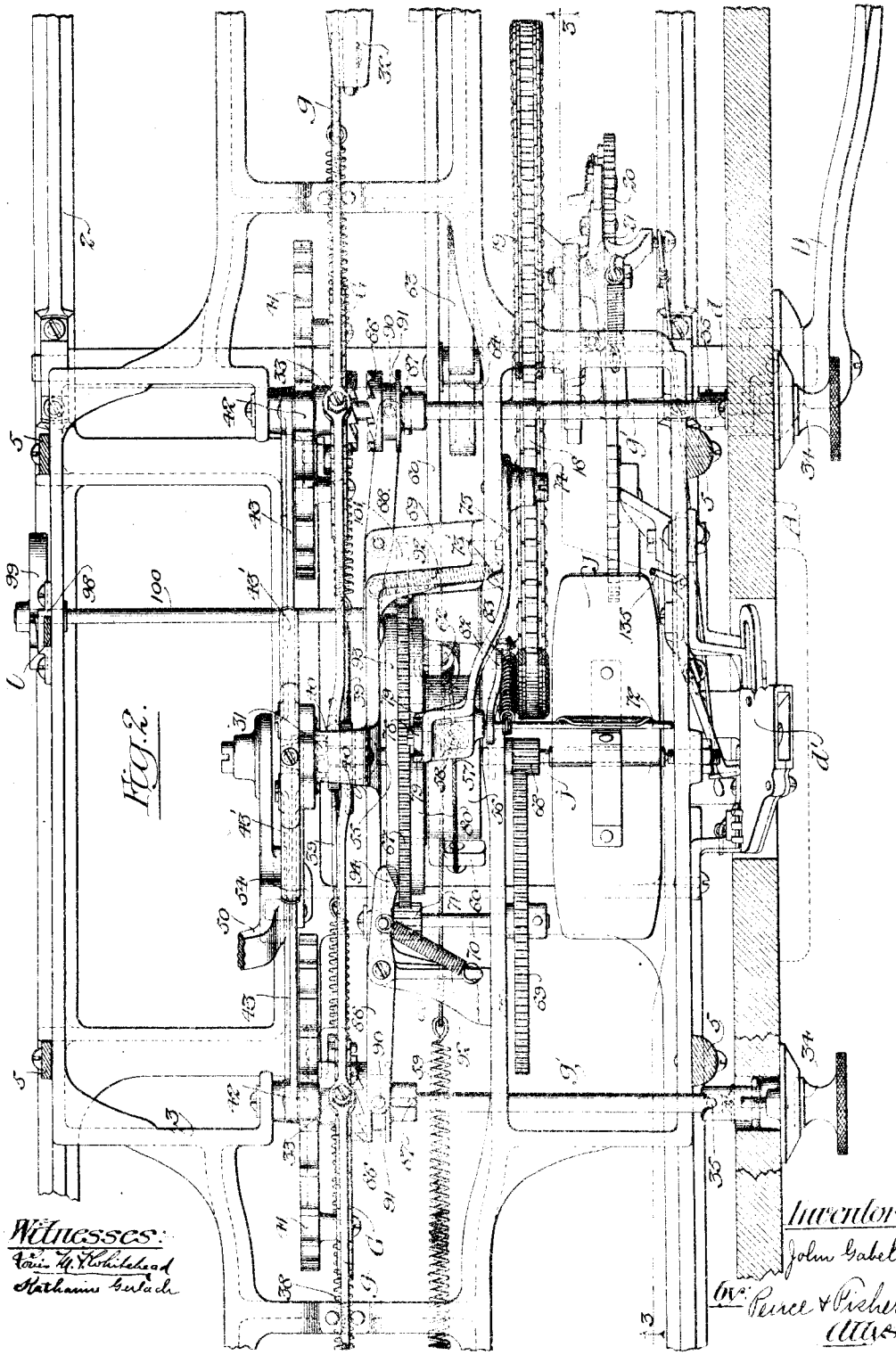

Witnesses:
Louis M. Whitehead
Katharine Gerlach

Inventor:
John Gabel
by Peirce & Fisher
Attys.

J. GABEL.

AUTOMATIC TALKING MACHINE.

APPLICATION FILED AUG. 18, 1909.

1,182,551.

Patented May 9, 1916.

7 SHEETS—SHEET 3.

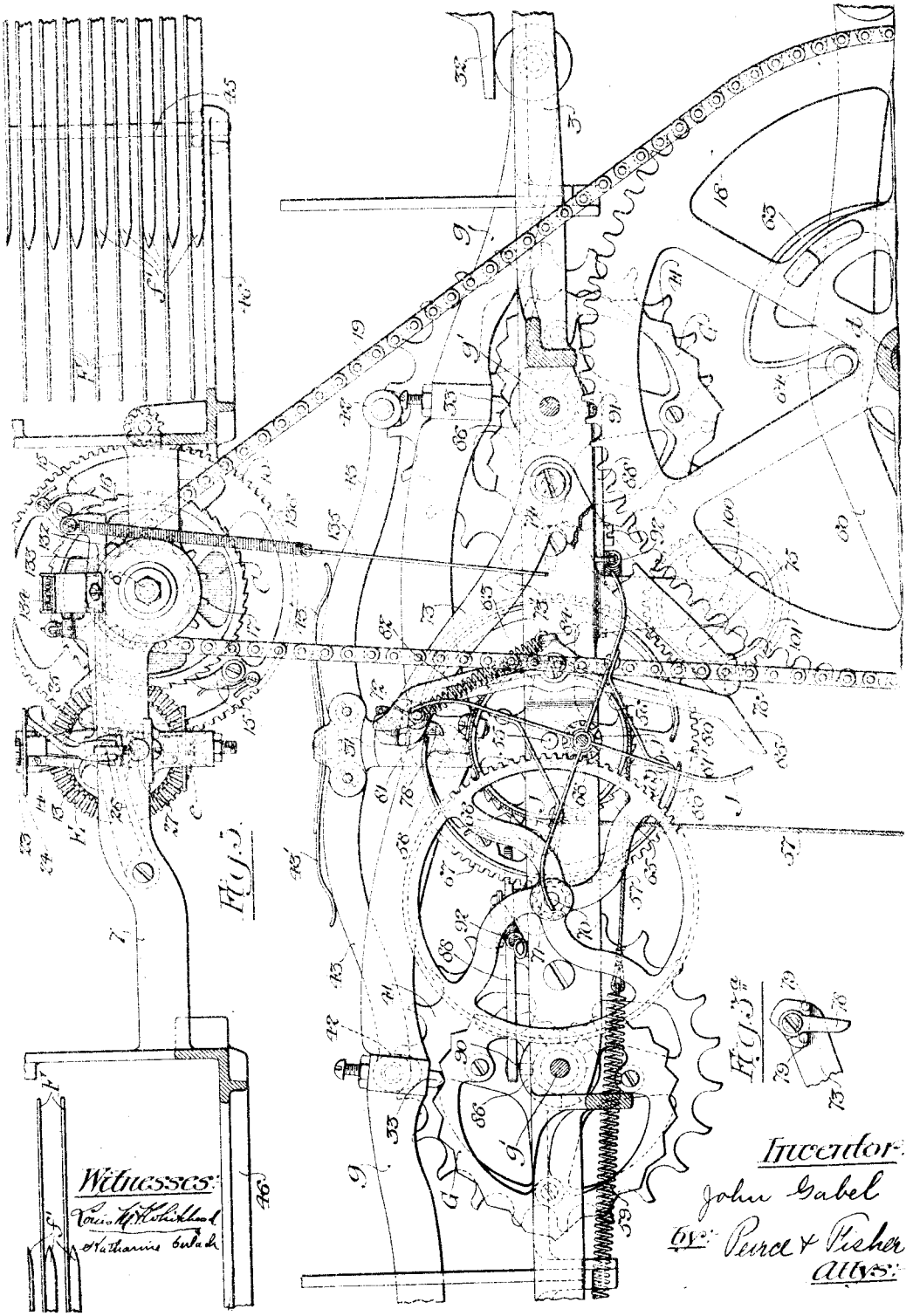

J. GABEL.

AUTOMATIC TALKING MACHINE.

APPLICATION FILED AUG. 18, 1909.

1,182,551.

Patented May 9, 1916.

7 SHEETS—SHEET 4.

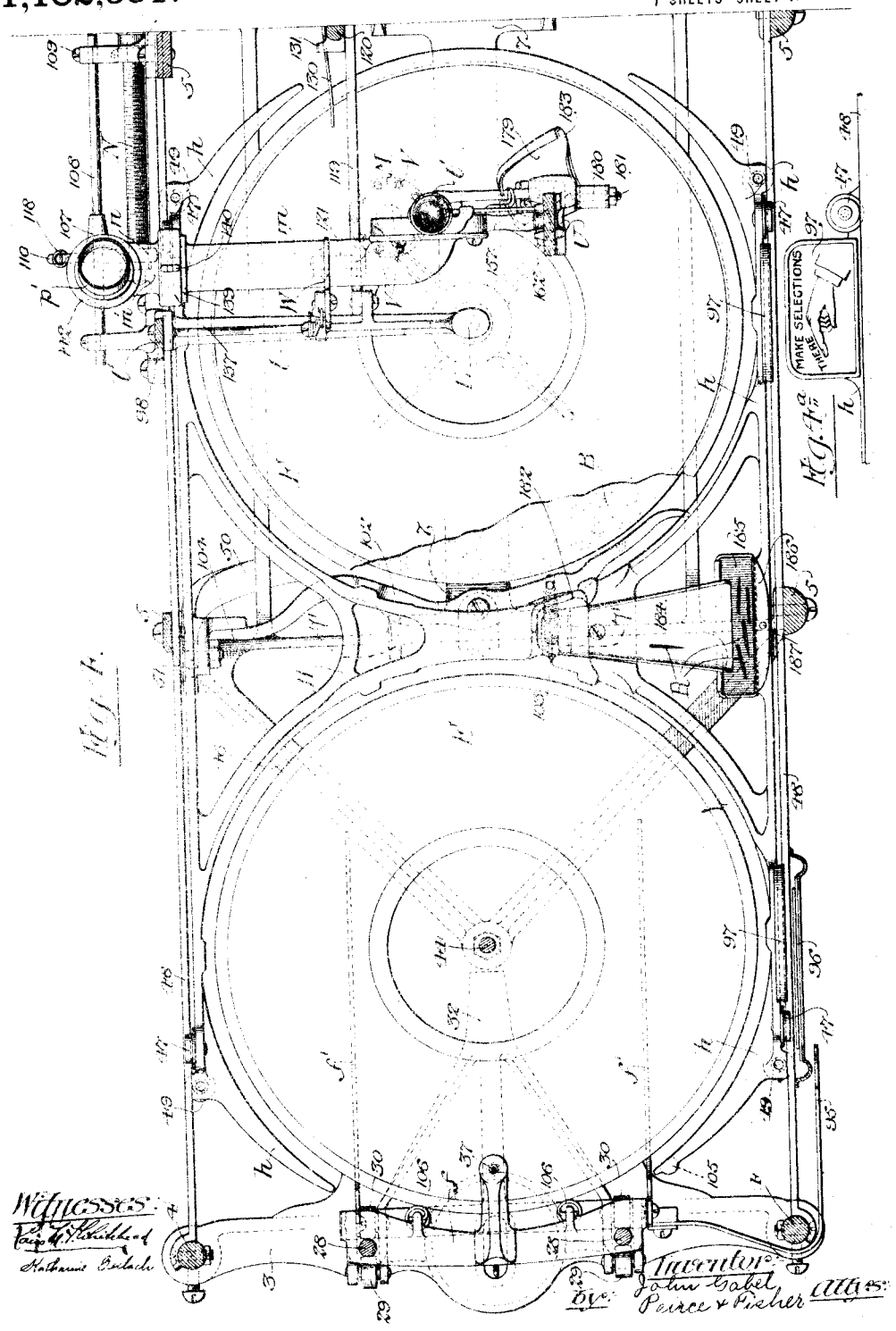

J. GABEL.

AUTOMATIC TALKING MACHINE.

APPLICATION FILED AUG. 18, 1909.

1,182,551.

Patented May 9, 1916.

7 SHEETS—SHEET 5.

Fig. 5.

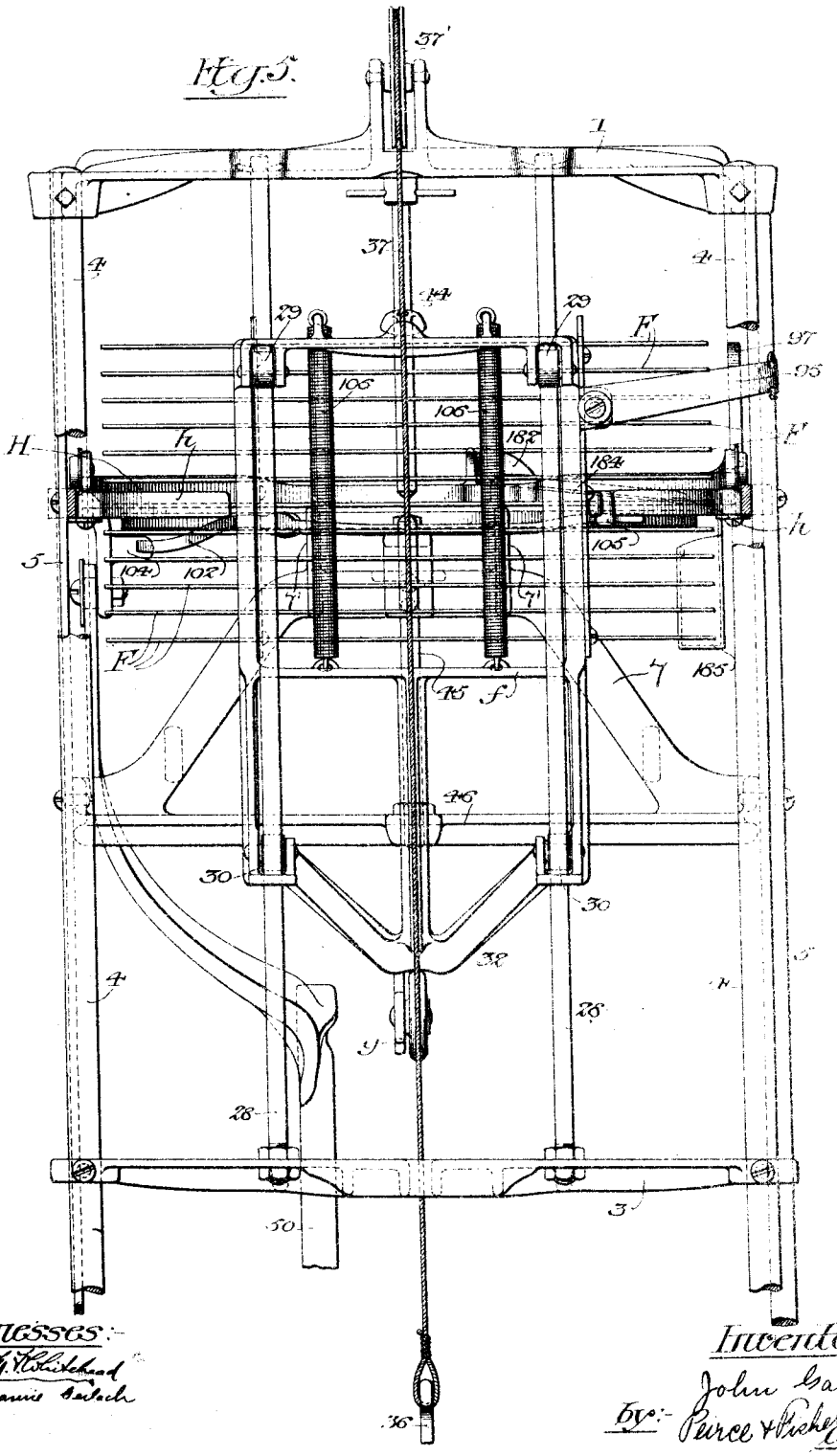

Witnesses:-
Wm. H. Whitehead
Nathaniel Babcock

Inventor:-
John Gabel
by:- Pierce & Fisher Attys.

J. GABEL.

AUTOMATIC TALKING MACHINE.

APPLICATION FILED AUG. 18, 1909.

1,182,551.

Patented May 9, 1916.

7 SHEETS—SHEET 6.

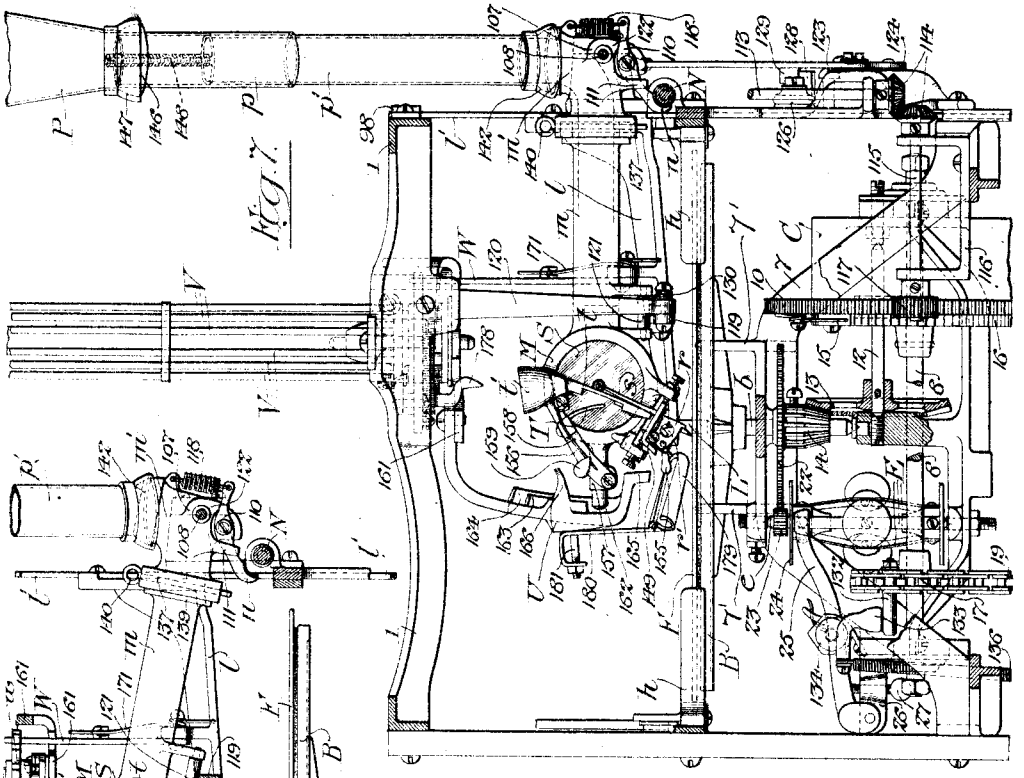

FIG. 7.

FIG. 8.

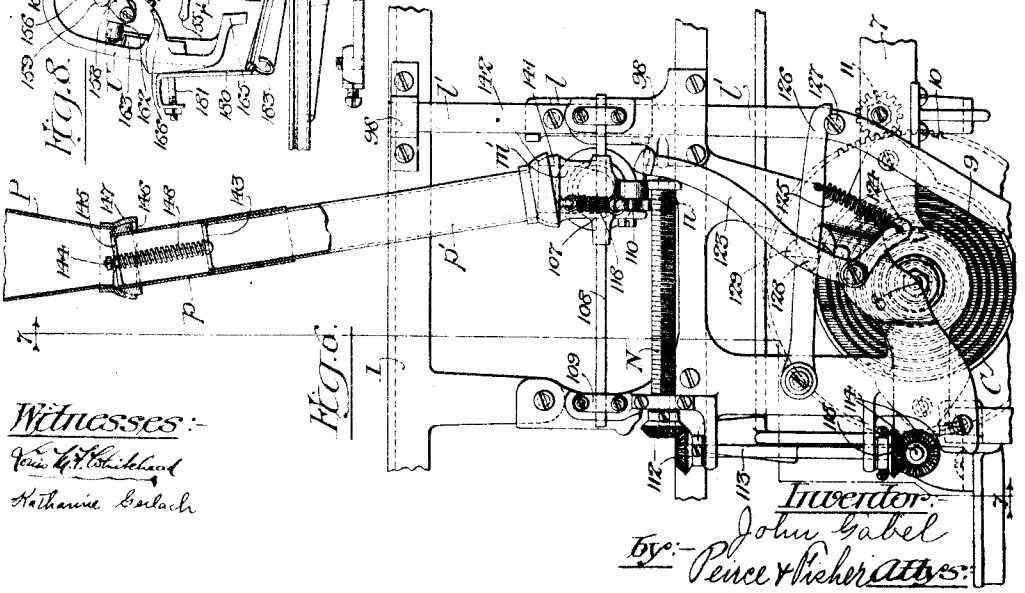

FIG. 9.

Witnesses:-

Louis G. Whitehead

Katharine Barlach

Inventor:-

John Gabel

by:- Pierce & Fisher attys:

J. GABEL.

AUTOMATIC TALKING MACHINE.

APPLICATION FILED AUG. 18, 1909.

1,182,551.

Patented May 9, 1916.

7 SHEETS—SHEET 7.

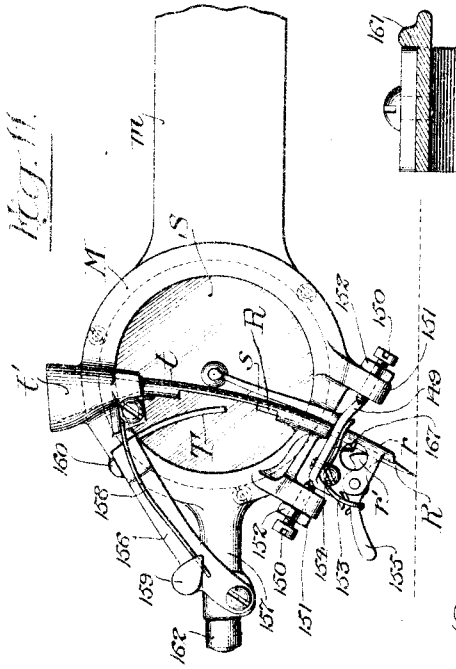

Fig. 11.

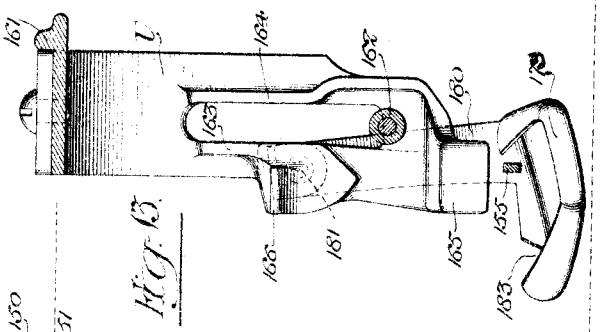

Fig. 13.

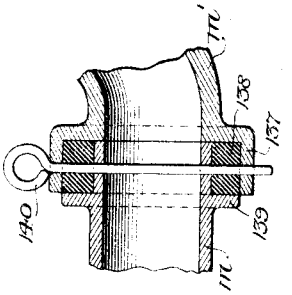

Fig. 12.

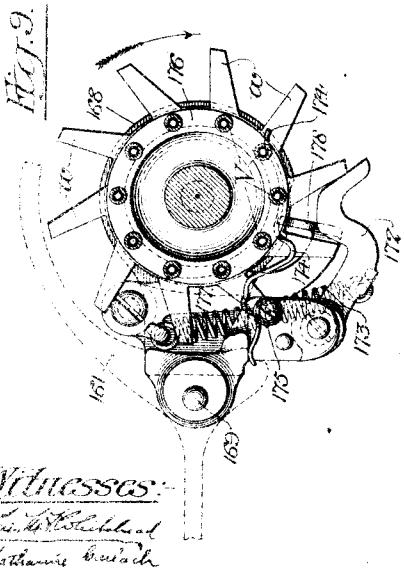

Fig. 9.

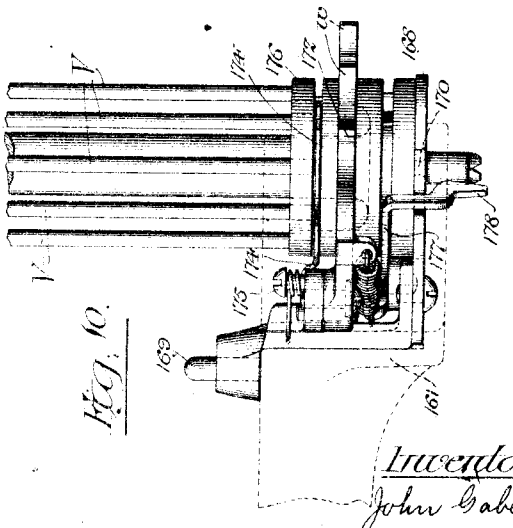

Fig. 10.

Witnesses:

Inventor

John Gabel

by Pierce & Fisher Attys.

UNITED STATES PATENT OFFICE.

JOHN GABEL, OF CHICAGO, ILLINOIS.

AUTOMATIC TALKING-MACHINE.

1,182,551. Specification of Letters Patent. Patented May 9, 1916.

Application filed August 18, 1909. Serial No. 513,428.

To all whom it may concern:

Be it known that I, JOHN GABEL, a citizen of the United States, and a resident of Chicago, county of Cook, and State of Illinois, have invented certain new and useful Improvements in Automatic Talking-Machines, of which the following is a specification.

The invention relates to talking or sound-reproducing machines of the type set forth in an application filed by me February 26, 1906, Serial Number 302,878, in which mechanism is provided for automatically engaging the disks or records and the sound-box needle or stylus and for automatically shifting the sound-box or reproducer and starting and stopping the machine.

The object of the present invention, is to improve and simplify the construction and provide means whereby its operation is rendered more positive and certain.

A further object of the invention is to provide means which will prevent the machine from getting out of order even under the careless handling to which it is sometimes subjected.

With these and other objects in view, as will presently appear, the invention consists in the features of improvement hereinafter set forth, illustrated in preferred form in the accompanying drawings and more particularly pointed out in the appended claims.

In the drawings, Figure 1 is a rear view of the machine with the back door of the casing removed to expose the operating mechanism, Fig. 2 is a plan view of part of the operating mechanism with parts shown in section on the line 2—2 of Fig. 1. Fig. 3 is an enlarged detail view with parts shown in vertical section on the line 3—3 of Fig. 2 and viewing the mechanism from the front of the machine. Fig. 3ª is a detail view in rear elevation of parts shown in Fig. 3. Fig. 4 is a plan view of the upper portion of the mechanism with parts shown in section on the line 4—4 of Fig. 1. Fig. 4ª is a view in front elevation of parts shown in Fig. 4. Fig. 5 is an end view of the upper portion of the machine. Fig. 6 is an enlarged detail view of parts shown in Fig. 1. Fig. 7 is a view of the mechanism shown in Fig. 6 with parts in section on the line 7—7 of Fig. 6. Fig. 8 is a view of parts shown in Fig. 7 in shifted position. Fig. 9 is an enlarged detail view in horizontal section of the needle-holder or magazine. Fig. 10 is a view in elevation thereof. Fig. 11 is an enlarged view in elevation of the sound-box illustrating the needle-changing mechanism. Fig. 12 is a sectional view of a joint of the sound box arm. Fig. 13 is an enlarged detail view of the needle changing mechanism with parts shown in section.

As in the construction set forth in the prior application referred to, the machine is inclosed within a suitable casing A (shown only in Fig. 1) upon a suitable framework. This framework comprises upper, lower and intermediate horizontal frames 1, 2 and 3 that are preferably formed of cast metal and connected by corner uprights 4 and intermediate uprights 5. The framework is removably mounted in the casing, preferably upon lugs 6 secured to the side walls thereof.

The turn-table B is arranged in the upper, central portion of the framework upon the upper end of a short, vertical shaft *b* that is journaled in a supplemental frame 7 secured to the uprights 5 (see Figs. 1 and 7). The turn-table is driven by a spring motor comprising a fixed drum C, a short, horizontal shaft 8 extending through the drum and a coiled spring 9 arranged within the drum, with one end connected thereto and the other end connected to the shaft 8. A gear 10 on the shaft 8, meshes with a pinion 11 upon a short, horizontal shaft 12 and this shaft carries a beveled gear 13 at its inner end (see Fig. 7) which meshes with a beveled pinion 14 upon the turn-table shaft 6. The gear 10 is loose on the shaft 8 and is provided with a pair of spring-held pawls 15 (see Fig. 3) which engage the teeth of a ratchet 16 that is fixed to the shaft, so that the gear is driven when the spring 9 rotates the shaft in one direction and thereby rotates the turn-table through the medium of the train of gearing described. The one-way connection formed by the pawls 15 and ratchet 16 between the gear and the shaft 12, permits the rotation of the shaft in opposite direction to wind up the spring 9 without moving the gear 12 or the turn-table B.

The motor spring 9 is wound up in the same manner as set forth in the prior application referred to. A small sprocket wheel 17 on the motor shaft 8, is connected to a large sprocket wheel 18 by a chain 19 (see Figs. 1, 2, 3, and 7). The wheel 18 is mounted upon a shaft *d* that is journaled in suitable bearings in the lower horizontal frame 2, projects through the front wall of

the inclosing casing A, and is provided on its forward end with a crank-arm D (see Fig. 2). The sprocket wheel 18 is loose on the shaft *d* and has a one-way connection with a ratchet wheel 20 that is fixed to the shaft. A pawl 21 normally locks the ratchet wheel, shaft and crank-arm and is arranged to be unlocked by suitable coin-operating mechanism *d'*. This coin-controlling mechanism is similar to that set forth in the prior application referred to and need not be more fully set forth here. As in the prior construction, the insertion of a suitable coin unlocks the shaft *d*, so that the latter can be turned through one revolution by the user of the machine to thereby rotate the sprocket wheel 18 and wind up the turn-table motor. At the end of the winding movement, the sprocket wheel 18 is freed from the ratchet wheel 20 and it, together with the other parts connected to the spring motor, are driven in the opposite direction and the turn-table is rotated to effect the reproduction of the record mounted thereon.

The vertical shaft *b*, on which the turn-table is mounted, is provided with a gear 22 (see Fig. 7) that meshes with the teeth of a pinion 23 mounted on the upper end of a short, vertical shaft *e*. This shaft carries a series of weighted, spring governor arms E that are connected at their lower ends to a collar fixed on the shaft and at their upper ends to a disk 24 arranged to slide on the shaft. This disk is arranged to engage a friction button of leather or the like on the end of an arm 25 that is pivoted at its outer end to a bracket 26 on the supplemental motor frame 7. An adjusting screw 27 threaded through the bracket 26, engages the pivoted end of the arm 25 and serves to regulate the pressure of the inner end of the arm upon the disk 24 to thereby vary the speed of the turn-table. The governor operates to maintain the speed of the turn-table uniform in accordance with the setting of the screw 27 and pressure arm 25.

The disk records F are shifted onto the turn-table B from a pair of magazines or record-holders *f* arranged on opposite sides thereof. Each record-holder or magazine comprises a rectangular framework (see Figs. 1. 4 and 5) having a series of inwardly-projecting arms *f'* upon which the records F are supported and the frame portion of each magazine is mounted to slide vertically on a pair of guide-rods 28 that are fixed at their ends to the upper and lower horizontal frames 1 and 2. At its upper portion, the frame of the magazine is provided with anti-friction rolls 29 which engage the outer sides of the rods 28, and at its lower end with anti-friction rolls 30 which engage the inner sides of the rods.

The magazines are vertically shifted to bring any one of the records thereon in line with the turn-table B by a pair of horizontally-disposed arms *g* (see Figs. 1, 2 and 3). These arms are pivoted at their inner ends to an upright 31 on the intermediate, horizontal frame 3 and their outer ends are provided with anti-friction rollers that engage a pair of arms 32 that project inwardly from the lower end of the magazine frame. The arms *g* and the record magazines or holders are shifted by a pair of heart-shaped cams G that are mounted upon the rear ends of a pair of horizontal shafts *g'* journaled in suitable bearings in the intermediate, horizontal frame 3 (see Figs. 2 and 3). These heart-shaped cams are provided with beveled recesses that are engaged by bevel-ended abutments 33 adjustably mounted upon the arms *g* and these abutments center themselves in any one of the recesses of the cams and thereby accurately position the record magazines with one of the records thereon in line with the turn-table. The shafts *g'* and cams G are turned by the user of the machine to bring the desired record opposite the turn-table through the medium of a pair of knobs 34 that are mounted upon the front wall of the casing A. The forward ends of the shafts are provided with pins 35 that detachably engage notches in the hubs of these knobs.

To enable the user of the machine to easily shift the record-holders or magazines, the latter are connected to a pair of counterbalancing arms 36 by cords 37 that extend upwardly over guide rollers 37' on the upper portion of the frame and are connected to the outer ends of the arms 36 (see Fig. 1). The inner ends of these arms are pivoted on uprights 36' on the lower horizontal frame 2, and springs 38 are connected to these arms adjacent their outer ends. The inner ends of these springs are connected to a pair of adjusting screws 39 that extend through a depending lug on the lower horizontal frame 2 and are provided with adjusting wing-nuts 40. The records frequently vary in weight, but by adjusting the nut 40, the proper tension can be placed on the spring 38 to nearly counterbalance the record-holders when filled with records, so that the user of the machine can readily shift the same by turning the knobs 34 to bring the record which he desires played in line with the turn-table B. A pair of ratchet wheels 41 are fixed to the cams G and these wheels are arranged to be engaged by rollers 42 upon the outer ends of a pair of arms 43. These arms are pivoted on the upright 31 and are engaged by leaf-springs 44 to hold the rollers in engagement with the ratchet wheels 41 and thereby accurately position the heart-shaped cams to hold the magazine with one of the records thereon in line with the turn-table.

The records F on each record-holder or magazine are held against displacement therefrom by a pair of stationary pins 44 and 45. The lower pins 44 are fixed at their lower ends to a pair of brackets 46 while the upper pins 45 are detachably connected at their upper ends to cross-arms on the upper horizontal frame 1. These pins extend through the usual central openings of the disk records and hold all of the records against displacement from the magazines, except the records that are in line with the turn-table. The ends of the pins are spaced apart, as shown, so that the records on the magazines in line with the turn-table are not held in place by the pins and can be shifted in horizontal direction onto the turn-table and back to position in the magazine-holders. By removing the upper pins 45, the records in the holders or magazines can be readily changed.

The records are shifted from the magazines onto the turn-table and back again to position in the magazines by a horizontally shifting carriage H which comprises two sets of curved arms *h* that are connected together at the center of the carriage and are arranged to engage a record on the turn-table and a record in one of the magazines that is in line with the turn-table (see Fig. 4). Rollers 47 on the carriage, engage the upper edges of a pair of horizontal guide-rails 48 that are fixed to the uprights 4 and 5 of the frame. Washers 49 fixed to the carriage, extend beneath the guide-rails 48 and hold the carriage against vertical displacement (see Fig. 5).

The carriage alternately shifts in opposite directions from one side of the machine to the other at the different operations of the machine, that is to say, at one operation it shifts in one direction and at the next operation in the opposite direction. At each operation it moves the record on the turn-table into one of the holders or magazines and moves a record from the other or opposite holder or magazine onto the turn-table. The carriage is shifted by a lever 50 (see Fig. 1) that is pivoted at its lower end to the lower horizontal frame 2 and is provided with a slotted upper end that engages a pin on a bracket 51 that depends from the rear portion of the carriage H. This lever is provided with a cam slot 52 having a curved, intermediate rib 53, and the slot is engaged by a roller on the end of a crank-arm 54. This crank-arm is mounted upon the rear end of a shaft 55 that is journaled in suitable bearings on the intermediate horizontal frame 3. At its forward end (see Fig. 2), the shaft is provided with a drum 56 about which is wound a cord 57. This cord is secured to the drum by a screw 58 and one end is connected to a horizontal spring 59, the opposite end of which is fixed to the machine frame. The other end of the cord is connected to the inner end of an arm 60 (see Figs. 1 and 2) which is pivoted at its outer end to a lug 61 on the lower horizontal frame 2. A heavy motor spring 62 is connected to the arm 60 and to the bottom of the machine casing and this spring serves, through the medium of the arm 60 and cord 57, to rotate the drum 56 and shaft 55. This spring is placed under tension by a cam 63 that is fixed to the winding shaft *d*, the cam being arranged to engage a pin 64 on the arm 60. When the operator releases the winding shaft by inserting a suitable coin and rotates it through one revolution, the cam 63 elevates the arm 60 and places the motor spring 62 under tension. The spring 59 then takes up the slack in the cord 57 and rotates the drum 56. This drum is loose on the shaft but is provided with a series of ratchet teeth 65 (see Fig. 3) which are arranged to engage a spring-held pawl 66 pivoted upon a gear 67 that is fixed to the shaft 55. When the motor-spring 62 is placed under tension, the ratchet teeth 65 pass idly beneath the pawl 66 but, when the pin 64 on the lever 60 passes over the high point of the cam 63, the spring 62 draws the arm downwardly and the ratchet teeth 65 upon the drum 56 act, through the medium of the pawl 66 to drive the gear 67 and shaft 55 and thereby operate the crank-arm 54 and the carriage shift-lever 50. A fan governor J controls the operation of this spring-motor mechanism. This fan governor is mounted upon a short, horizontal shaft *j* that is journaled in suitable bearings on the intermediate horizontal frame 3. The shaft *j* is provided with a pinion 68 that meshes with the teeth of a gear 69 on a short, horizontal shaft 70 (see Fig. 2). The rear end of the shaft 70 is provided with a pinion 71 that meshes with the teeth of the gear 67, so that the fan governor is driven with the gear and shaft to control its speed. The movement of the shaft 55 and crank-arm 54 thereon, is limited to a half revolution at each operation of the machine, so as to move the lever 50 and carriage H alternately in opposite directions at the successive operations of the machine. The shaft 55 and its operating spring-motor are normally held against movement by a pin 72 (see Figs. 2 and 3) that is arranged to engage the fan governor J. This pin is fixed to the end of the upper arm 73 of a bell-crank that is connected by a pivot pin 74 to the mid-portion of the intermediate horizontal frame 3. The lower arm 75 of the bell-crank is provided with a rearwardly projecting lug 76 (see Figs. 1 and 3) that is arranged to be engaged by a forwardly projecting lug 77 on the end of the arm 60, when the latter is lifted by the cam 63 to place the motor-spring 62 under tension. The pin 72 is

thereby disengaged from the fan governor J to permit the operation of the shifting motor. A dog or pawl 78 is pivoted upon the end of the upper arm 73 of the bell-crank and has a limited play between a pair of lugs 79 thereon (see Fig. 3ª). This dog coöperates with a cam mounted on the gear 67 and which comprises a pair of semi-circular flanges 80 having openings 81 between their ends at diametrically opposite points. Normally, the dog or pawl 78 is located in one of the openings 81, as shown in Fig. 3, and the pin 72 then engages one of the wings of the governor fan J. On the upward swing of the arm 60, the lug 77 thereon strikes the lug 76 on the lower arm 75 of the bell-crank and lifts the pin 72 out of engagement with the governor fan and lifts the dog 78 out of the opening 81.

On the downward movement of the arm 60 under the influence of the motor-spring 62, the gear 67 and shaft 55 are advanced as described, and when the arm 60 releases the bell-crank, the dog 78 thereon rests upon one of the cam flanges 80, so that the pin 72 is held out of the path of movement of the governor fan J until the gear 67 and shaft 55 have made a half revolution. The dog 78 then drops into the opposite recess 81 and the pin 72 engages the fan governor and arrests the operation of the shifter motor. The ends of the semi-circular cam flanges 80 are so inclined that the dog 78 will enter with certainty into the spaces 81. To prevent any accidental disengagement of the pin 72 with the governor fan, a catch 82 is pivotally mounted upon the horizontal frame 2 and is provided with a hooked upper end that is normally held in engagement with the pin 72. A spring 83 extends between the pin 72 and a lug 84 on the catch-arm 82 adjacent its pivot point. This spring serves the double purpose of shifting the bell-crank to move the pin 72 into the path of the fan governor J when the dog 78 is opposite one of the openings 81, and also serves to shift the catch-arm 82 into position to prevent any rebound or accidental disengagement of the pin from the fan governor. The catch-arm 82 is provided with a depending extension or tail-piece 85 which is engaged by the arm 60 as it is raised to disengage the upper hooked end of the catch-arm from the pin 72 just before the lug 77 on the arm 60 engages the bell-crank to shift the pin out of engagement with the fan governor. By this means, the crank-arm 54 on the shaft 55 is operated with certainty for a half revolution at each operation of the machine to alternately shift the arm 50 and carriage H in opposite directions from one side to the other at the successive operations of the machine.

As stated, some one of the records which has been withdrawn from one or the other of the record-holders or magazines, is in position on the turn-table and this record must be returned to the magazine from which it has been removed at the next operation of the machine at the same time that the record from the full magazine within the arms *h* of the carriage H is shifted thereon to the turn-table. It is necessary, therefore, that the user of the machine shall make his selection from the full magazine and bring the desired record thereon into position between the stationary retaining pins 44 and 45. This record is then free of the pins but is held against displacement because it is then within the arms *h* of the carriage H. The other or opposite magazine from which one of the records has been removed, must remain stationary, so that the record can be returned to proper position thereon at the next operation of the machine. For this reason, means are provided whereby the magazine from which a record has been removed is disconnected from the corresponding knob 34 and for connecting the full magazine to its operating knob so that the user can make his selection therefrom. This mechanism comprises a pair of clutch sleeves 86 (see Fig. 2) which are slidably mounted upon the shafts *g'* but connected to rotate therewith by pins 87 that engage longitudinal slots in the hubs of the clutches. These clutches are provided with ratchet teeth which coöperate with similar clutch teeth formed upon the hubs of the shifter cams G that are loosely mounted upon the shafts *g'*. The clutches are moved into and out of engagement with the shifter cams G by means of a pair of shifter-arms 88 that are pivotally mounted upon a pair of lugs 89 on the intermediate, horizontal frame 3, and are provided with pins 90 on their ends engaging annular grooves 91 formed in the clutch sleeves. Springs 92 are connected to these arms and these springs tend to shift the clutches into engagement with the shifter cams to thereby lock the latter to the shafts *g'*. The ends of the shifter-arms engage a cam-flange 93 upon the rear face of the gear 67. This flange is provided with a notch 94 at one point and the parts are so arranged that the clutch shifter corresponding to the full magazine engages the notch 94 and the corresponding cam G is connected to its shaft *g'* and to the operating knob 34 therefor. The user of the machine can manipulate the full magazine to bring any desired record thereon opposite the turn-table and within the grasp of the arms *h* of the carriage H, so that the record thus selected will be shifted onto the turn-table at the next operation. The clutch corresponding to the magazine from which a record has been removed will, however, be held out of engagement by the flange 93, as shown in Fig. 2, so that this

magazine cannot be shifted and will remain stationary to receive the record on the turn-table at the next operation of the machine.

The ends of the shifter-arms 88 which engage the flange 93, are diametrically opposite so that, at the next operation of the machine, the gear 67 and cam 93 are given a half revolution as described and the notch 94 is brought beneath the other shifter-arm, so that its spring can move the clutch connected thereto into engagement with the corresponding shifter cam. At the same time, the other clutch which has been engaged with its shifter cam is moved out of engagement therewith against the tension of its spring 92. These parts thus serve to alternately connect the shifter mechanisms for the two magazines to the selecting knobs 34 and the selection by the user of the machine is always made from the full magazine, so that the one from which a record has been removed remains stationary until this record is returned thereto.

To aid the user of the machine in making his selection, each magazine is provided with a pointer 95 which coöperates with a suitable program card 96 (see Fig. 4) upon which the names of the different records are mounted. The full magazine from which the selection to be made is also indicated by a pair of pointers 97 mounted upon the carriage (see Figs. 4 and 4[a]). The carriage occupies different positions at the opposite sides of the machine at the alternate operations of the machine, and the pointer which indicates the full magazine is exposed while the other pointer is hidden behind the program card 96.

The record on the turn-table is held in position by a center pin L (see Figs. 4, 7 and 8) that is mounted upon the inner end of a horizontal arm *l*. This arm is fixed to the upper end of a vertically shifting-rod *l'* which is guided in brackets 98 fixed to the upper, horizontal frame 1, the rear guide-rail 48 and the intermediate horizontal frame 3. The lower beveled end of this shifter-rod *l'* engages a cam 99 (see Fig. 1) which is fixed upon the rear end of a horizontal shaft 100. This shaft is journaled in suitable depending brackets on the intermediate horizontal frame 3 and at its forward end is provided with a gear 101 (see Figs. 2 and 3) that meshes with the teeth of the gear 67 that is driven by the shifter motor. The pin L normally engages the central opening of the record on the turn-table but, when the shifter-motor starts its operation, the cam 99 is shifted in the direction of the arrow indicated in Fig. 1 and the shifter bar *l'* is quickly lifted to thereby raise the arm *l* and pin L to the position shown in Fig. 8, so that the record on the table can be moved therefrom and the selected record from the full magazine moved onto the table beneath the pin. At the end of the movement of the shifter mechanism, the cam 99 allows the bar *l'* to drop by gravity and thereby bring the pin L into engagement with the record which has been brought to position on the turn-table B.

The records frequently vary slightly in size and to prevent the larger record from rubbing upon the arms *h* of the carriage H as it is rotated by the turntable, the carriage, after it has been shifted to place a record on the turn-table, is shifted slightly in the opposite direction by means of an arm 102 that is centrally pivoted upon the frame portion 7. A spring 103 connects one end of this arm to the frame and at the end of the movement of the carriage H toward the left, a lug 104 on the carriage engages the rear end of the arm and moves it against the tension of the spring 103. At this point, the roller on the crank-arm 54 moves over a high point in the cam slot 52 of the carriage shift-lever 50 and the spring 103 then acts through the medium of the arm 102 to move the carriage back slightly toward the right and thereby move the arm *h* of the carriage H away from the record on the turn-table. When the carriage is shifted in the opposite direction toward the right to move the record from the left-hand magazine, a lug 105 on one of the left-hand arms *h* engages the forward end of the arm or lever 102 and moves it against the tension of the spring 103. Then, after the roller on the crank-arm 54 has passed over another high point in the cam slot 52 of the shift-lever 50, the spring 103 acts to remove the carriage back slightly toward the left and thereby bring the arms *h* from contact with the record on the turn-table.

In view of the slight variation in the size of the different records, spring-centering devices are provided, so that the records when shifted back into the magazine will properly engage the stationary pins 44 and 45 when the magazines are thereafter shifted in vertical direction. These spring-centering devices preferably comprise a pair of coiled springs 106 (see Figs. 4 and 5) which extend between the upper and lower horizontal portions of the magazine frames *f*. These springs are so arranged that they will just touch the large records when the latter are in engagement with the pins 44 and 45. The throw of the carriage is such that it will move small records to central position on the magazine and will move large records slightly beyond the central position. The large records thus engage and compress the spring stops 106 slightly, but, when the carriage is moved back slightly by the spring-operated arm or lever 102, the springs 106 will shift these large records back to center position. At the same time, the spring stops or centering devices will serve to prevent

the displacement of the small records and insure that they be properly engaged by the pointed ends of the pins 44 and 45 when the magazines are shifted in vertical direction.

The sound-box M is mounted upon the forward end of a hollow arm m, and the rear end of this arm is socketed in a hollow elbow m'. This elbow (see Figs. 1, 4, 6, 7 and 8) is provided with a rearwardly-projecting, transversely perforated portion 107 which engages a horizontal guide-rod 108 that is fixed to one of the brackets 98 and to a bracket 109 that is fixed to the frame portion 7 and to a depending lug on the upper horizontal frame 1. A short arm or lever 110 is pivoted to the portion 107 on the elbow m' and extends between lugs 111 on the elbow and at its forward end is provided with a segmental nut n that engages a feed-screw N. This feed-screw is journaled in suitable bearings on the frame portion 7 and is connected at one end by a pair of beveled pinions 112 with a vertical shaft 113 that is also journaled in suitable bearings upon the frame portion 7. The lower end of the vertical shaft 113 is connected by a pair of beveled pinions 114 to a short, horizontal shaft 115 journaled in a suitable bracket 116 that is fixed to the frame portion 7. The inner end of this horizontal shaft 115 is provided with a pinion 117 that meshes with the gear 10 of the turn-table motor, so that the feed-screw N is rotated by the turn-table motor to propel the sound-box over the record on the turn-table as the latter is rotated to thereby reproduce the record. A spring 118 is connected to the end of the arm 110 and to a lug on the elbow m' and this spring serves to suitably hold the segment nut n in engagement with the feed-screw N.

The sound-box M, arm m and elbow m' are normally at one end of their movement with the sound-box adjacent the center of the record. These parts are swung about the guide-rod 108 of the center to lift the sound-box into and out of engagement with the record by a bar or track 119 which is pivoted at one end to the arm l (see Fig. 4) and at its opposite end to a bracket 120 (see Fig. 7) that depends from the upper, horizontal frame 1. This bar or track extends beneath a lug or anti-friction roller 121 on the under side of the arm m, and near its free end, so that the sound-box is raised with the arm l at the beginning of the operation of the shifter mechanism. This movement also lifts the segment nut n out of engagement with the feed-screw, the arm 110 being at this time held by the spring 118 against a stop 122 on the projecting portion 107 of the elbow m'. The sound-box and parts connected thereto are then free to be shifted to the outer edge of the record to commence the reproduction thereof. This shift is effected by an arm or lever 123 (see Fig. 6) which is pivoted at its lower end upon the rear portion of the supplemental frame 7 and having its upper end in position to engage the lug 107 on the elbow m'. The arm 123 has a projecting tail-piece 124 that is connected by a spring 125 to a horizontal arm 126. This arm is pivoted at one end to the supplemental frame 7 and its other end rests upon a pin 127 on the vertically movable shifter rod l'. At the beginning of the operation of the shifter motor, the shifter rod or bar l' is raised to thereby lift the center pin L and release the record on the turn-table and also to raise the sound-box from the record. This shift of the bar l' lifts the arm 126 and places the spring 125 under tension. The arm 123 is not at once shifted by this spring but is held against movement by a bevel-edged lug 128 on the arm 126 which engages a similar lug 129 on the arm 123. The latter is not shifted by the spring 125 until after the lug 128 passes by the lug 129 but, as soon as this occurs, the spring 125, which has been placed under considerable tension by the vertical movement of the arm 126, shifts the arm 123 and moves the elbow m' along the guide-rod 108 and thereby shifts the arm m connected to the elbow and sound-box to the outer edge or beginning of the record that is placed on the turn-table by the carriage H. At the end of the movement of the shifter mechanism and of the carriage H, the bar l' descends as described, and the sound-box is lowered onto the record. The arms 126 and 123 are also returned to initial position. When the inner end of the bar or track 119 is lifted by the arm l, it is then inclined outwardly toward the outer edge of the record, so that the arm m slides down this track as the elbow m' is pushed back by the arm 123 along the guide-rod 108.

When the sound-box is lowered onto the record at the end of the operation of the shifter mechanism, the roller 121 on the arm m engages a spring finger 130 that is fixed to the lower end of the bracket 120 (see Figs. 4 and 7), this finger extends inwardly over the record and through a lug 131 on the lower end of the bracket 120, and which lug is preferably slotted to engage the spring finger and hold it in position. The spring finger serves to uphold and partially counterbalance the arm m and sound-box M, so that the turn-table and record thereon can be started in their rotation and acquire sufficient momentum before the record receives the full weight of the sound-box. By this arrangement, the friction between the needle or stylus of the sound-box and the record on the turn-table will not prevent the rotation of the turn-table. Moreover, this spring finger prevents the new needle, which is placed in the sound-box at each operation of

the machine, from scratching the record. After the arm *m* passes from the spring finger, the turn-table has acquired sufficient momentum to properly rotate the record thereon and the point of the new needle has been sufficiently worn so that it will not injure the record.

When the sound-box is lowered into engagement with the record, the segment nut *n* engages the feed-screw N and the latter is driven by the operating motor, which also rotates the turn-table, so that the sound-box is propelled over the record and the needle or stylus thereon will enter and travel in the groove of the record to reproduce the same. The feed-screw positively propels the sound-box across the record and back to the end of its movement adjacent the center of the turn-table whatever may be the length of the groove of the record. When the sound-box has fully completed this movement, the operating motor therefor and for the turn-table is arrested by a stop-pin 132 on the chain 19 (see Figs. 3 and 7) which is used in winding the motor as described and which is driven thereby in reverse direction during its operation. At the end of the movement of the sound-box, this stop-pin 132 engages the end of an arm 133 pivoted on the supplemental motor frame 7 and lifts it, so that it is brought in engagement with and lifts the arm 25, the end of which bears upon the governor disk 24. This shift of the arm 25 causes it to bear with so much friction upon the disk 24 that the operating motor for the sound-box and turntable is brought to a standstill. The arm 133 also operates a small counter 134 mounted on the supplemental frame 7 to indicate the number of times that the machine has been operated.

As in the mechanism described in the prior application referred to, means are provided for preventing the operation of the shifter mechanism or in any way tampering with the operation of the machine while it is reproducing a record. For this purpose, means are provided for preventing the insertion of a coin which unlocks the machine and this device is controlled, as in the construction shown in the prior application, by a rod 135 connected by a spring 136 to the arm 132, and at the end of an operation, rod 135 is shifted so that the coin can be inserted and the machine again operated.

The end of the hollow arm *m* is arranged within an enlarged annular flange 137 on the elbow *m'*, and a heavy rubber washer 138 (see Fig. 12) is arranged within this flange and around the end of the hollow arm *m*. A flange 139 on the arm extends over the outer face of the washer and a pivot pin extends through the flange 137 and washer 138 and through the end of the arm *m*. This pin is vertically disposed and the whole forms a joint which will yield very slightly to permit the sound-box to sway slightly in horizontal direction as it is propelled over the record by the feed-screw N. By this arrangement, the stylus or needle of the sound-box will follow the grooves of the record without binding or scratching thereon and the reproduction of the record will be clearer than if a rigid arm were employed.

The elbow *m'* is connected to an amplifying horn P by a swinging to comprising two telescopic sections *p*, *p'* (see Figs. 7 and 8). The elbow *m'* is provided with a head 141 which is in the form of a segment of a sphere and which fits within a correspondingly-shaped socket piece 142 upon the lower end of the tube section *p'*. The upper end of this tube section fits within the tube section *p* and carries a cross-bar 143 at its upper end. A pin 144 is fixed at its lower end to this cross-bar and extends loosely through a cross-bar 145 on the upper end of the tube section *p*. The upper end of the tube section *p* is provided with a head 146 which is in the form of a segment of a sphere, and which fits a correspondingly-shaped socket piece 147 on the lower end of the amplifying horn P that is supported by and projects above the top wall of the casing A. A spring 148 surrounds the pin 144 and presses against the cross-bars 143 and 145 on the telescoping tube sections *p*, *p'* and tends to force them apart, so that the joint between the lower tube section and the elbow *m'* and between the upper tube section and the amplifying horn are sound tight during the transverse shift of the sound-box over the record, and the sound waves will be properly conducted from the sound-box through the arm *m*, elbow *m'* and telescoping tube sections *p*, *p'* to the amplifying horn P, despite the variation in distance between the end of the elbow *m'* and the end of the amplifying horn, and in spite of any slight vertical vibrations of the arm *m* due to any irregularities of the record or turn-table whereon it is mounted. The nut *n* is always maintained in proper engagement with the feed-screw N by the spring 148 in spite of any vertical vibrations of the arm *m* and elbow *m'*. The telescopic tube sections *p*, *p'* can be readily removed when necessary by forcing them together against the pressure of the spring 148.

The sound-box M (see Fig. 11) is provided with a suitable holder *r* for the needle or stylus R. This holder is mounted upon a cross-bar 149 that is mounted between a pair of center point pivot screws 150 that are threaded to a pair of lugs 151 on the sound-box and provided with lock-nuts 152. An arm *s* connects the bar 149 to the diaphragm S of the sound-box. The needle R is held in place by a pivoted clamp *r'* that is forced against the needle by a spring

153 that is fixed to a pin 154 and engages the tail-portion 155 of the clamp r'. A tube t mounted on the sound-box, leads from a funnel t' at the other portion of the sound-box to the needle or stylus-holder r. This tube is cut away on one side and an ejector pin T operates through the cut-away portion of the tube to force out the used needle. This ejector is mounted upon the end of an arm 156 which is pivoted upon a forwardly-extending lug 157 on the sound-box. A spring 158 fixed at one end to the sound-box, engages a lug 159 on the arm 156 adjacent the pivot of the latter and normally holds the arm against the stop 160 on the sound-box with the needle ejector pin T withdrawn and in the position as shown in the drawings.

At the end of the operation of the machine, the sound-box is arrested in front of a cam U which is fixed to and depends from a bracket 161 on the upper horizontal frame 1. In this position, a roller 162 on the end of the projection or finger 157 of the sound-box is immediately below and between a pair of projecting flanges 163 and 164 on the cam plate U (see Figs. 8 and 13). When the machine is started in operation, the sound-box is lifted as described, but the coöperating lugs 128 and 129 on the arms 126 and 123, prevent the arm 123 from at once returning the sound-box, so that the roller 162 on the sound-box engages the flanges 163 and 164 of the cam-plate which guides the sound-box in vertical direction. As the sound-box thus moves upwardly from the position shown in Fig. 7, the tail 155 of the needle clamp r' strikes a projection 165 on the lower end of the cam-plate and is shifted against the tension of the spring 153 to release the used needle. There is always a new needle in the tube t resting on the used needle, and the further upward movement of the sound-box will bring the lug 159 on the arm 156 against a lug 166 on the cam plate and the ejector pin T will be projected into the tube t, striking the end of the new needle which rests upon the used needle so as to force out the used needle and project the new one into position to be engaged by the clamp r'. The cam lug 165 is sufficiently long to hold the needle clamp r' released until the new needle has been placed in position by the needle ejecting pin or finger T. As soon as the tail 155 passes the cam lug, the spring 153 restores the needle clamp to the position shown in the drawings and grips the new needle. Until this occurs, the new needle is held in place by a spring 167 mounted on the arm 149 and having its end in position to engage the needle in the needle support r. When the sound-box has been lifted to bring the roller 162 above the flange 163 and the parts 155 and 159 above the lugs 165 and 166 on the cam-plate, the sound-box is shifted outwardly, as above described, to commence the record. Before this occurs, another needle is supplied to the tube t and rests on the needle in the holder r, so that the machine is ready for the next succeeding operation. This needle is supplied from a suitable magazine as presently described. If more than one extra needle is in the tube t, it will be removed through the cut-away portion of the tube when the sound-box strikes against the bracket 120 at the end of its outward shift.

As in the construction set forth in the prior application referred to, the needle magazine comprises a cage of hollow tubes V rotatably mounted upon a bracket 168 that rests upon the bracket 161 and detachably engages a pin 169 thereon. The tubes V are filled with needles placed one above the other with their points downward and as the cage is rotated the needles are discharged, one at a time, through an orifice 170 (see Fig. 10) into the funnel t' at the upper end of the needle tube t of the sound-box when the latter is raised into the position shown in Fig. 8. The needle magazine is rotated, one step at a time, to bring the tubes V successively over the opening 170 by a dog W which is pivoted to the arm l (see Fig 8) and is arranged to coöperate with a series of ratchet teeth or fingers w formed on the lower portion of the rotatable needle magazine or case. The pawl dog W is held by a spring against a portion of the bracket 161 and at each operation of the machine, as the arm l is lifted, it acts upon the teeth or fingers w to advance the needle magazine one step. A pawl 172 pivoted upon the bracket 168, is held in engagement by a spring 173 with its ratchet teeth or arms w and serves to hold the needle magazine in position with one of the tubes V over the discharge opening 170 in the lower portion or plate of the bracket 168. Whenever a tube is brought over the opening 170, the lowermost needle is dropped therethrough into the funnel t' of the sound-box, thence through the tube and rests on the needle fixed in the needle-holder r. Only one needle drops from the magazine since the needle immediately above the lowermost needle over the opening 170 is held against discharge from the tube by a spring 174 that is fixed at one end to a pin 175 on the bracket 168 and extends between a pair of guide-plates 176 on the lower portion of the needle magazine and through slots in the tube V, so that it engages the next to the lowest needle in the tube over the opening 170 and prevents it from falling until after the tube has passed the opening 170. When this occurs, the lowermost needle rests upon the bottom plate 168 and is discharged therefrom through the opening 170 when

the tube is again brought in line with this opening.

When the needle magazine is empty, it is desirable to prevent the operation of the machine. For this purpose a lock-bar 177 is pivoted to the bracket 168 and is connected to one end of the spring 173. This lock-bar is arranged below the lower ends of the tube V, and the spring 173 holds it in engagement with the needle projecting therefrom and engaging the stationary bottom plate of the bracket 168. The lock-bar 177 is provided with a depending, pointed end portion or lug 178. Normally, this lug is held out of the path of movement of the sound-box and does not prevent its outward shift to commence the reproduction of a record. But if two adjacent tubes V of the magazine are empty, the spring 173 shifts the arm 177 inwardly and the pointed lug 178 thereon will so engage the funnel l' on the sound-box as to prevent the outward shift of the sound-box by the arm 123. The operating spring 125 of this arm will be placed under tension but it will fail to operate the arm. The proprietor of the machine will thus be notified that it is necessary to provide a new magazine full of needles or refill the old one in the machine.

The needles as they are projected from the sound-box, drop into a flanged cup or holder 179 on the lower end of an arm 180 that is connected by a pivot pin 181 to the rear face of the cam-plate U (see Fig. 8). The record-shifting carriage H is provided centrally with an upwardly projecting portion 182 (see Figs. 4 and 5) which, as the carriage is shifted, is adapted to strike the cup or used needle-holder 179 and tilts it about its pivot 181, so that the needle therein is dumped out through an opening 183 in its flange and into a chute 184 mounted on the carriage. This chute is inclined and leads to a cup 185 having an outturned lip at its upper edge that is perforated to detachably engage a pin 187 on the edge of the carriage H. The used needles are thus collected in the cup 185 and do not drop down into the operating mechanism of the machine. When this cup is full it can be removed and emptied.

In operating the machine, the user thereof will first make his selection from the full record-holder or magazine by turning the corresponding knob and thereby shifting the full magazine vertically through the medium of the shifter cam G and arm g until the desired record as indicated on the program card 96 is opposite the turn-table and within the arms of the carriage H. At this point it is clear of the pins 44 and 45. He will then release the winding crank D and shaft d through the medium of the coin-controlled mechanism and will turn this arm and shaft through one revolution when it is again locked. This movement of the shaft d will wind up the operating motor E for the turn-table B and feed-screw N through the medium of the chain 19 and will place the shifter motor spring 62 under tension through the medium of the cam 63 and arm 69. The shift of the chain 19 will move the pin 132 away from the arm 133 and thereby release the operating motor. At the end of the upward movement of the arm 60, the lug 77 thereon will engage the tail-portion 85 of the catch 82 and release the stop-pin 72 and the lug 77 will also strike the lug 76 on the bell-crank arm 75 and thereby lift the locking pin 72 and dog 81 to thereby permit the operation of the shifter motor when the arm 60 is moved down by the shifter motor spring 62. The semi-circular cam flanges 80 coöperate with the dog 78 as described to permit a half revolution of the shaft 55 to thereby shift the carriage H through the medium of the arm 50 from one side of the machine to the other, and move the record on the turn-table back to its position in one of the record magazines and move the selected record from the full magazine onto the turn-table. The shaft 55 drives the cam 99 as described, and upon the initial movement of the shifter motor, the arm l and centering L are lifted to release the record on the turn-table. At the same time, the sound-box arm m is lifted and the lugs 165 and 166 on the cam-plate U operate upon the clamp r' and finger T to change the needle as described. The pawl W is also operated to advance the needle magazine one step and thereby deposit the new needle in the tube t of the sound-box. Upon the initial movement of the shifter rod l', the arm 126 is raised to place the spring 125 under tension, but the arm 123 which shifts the sound-box is held against movement until after the lug 128 on the arm 126 passes the lug 129 on the arm 123. When this occurs, the spring 125 throws the shifter-arm 123 and thereby moves the sound-box back to begin the record. At the end of the operation of the shifter mechanism, the arm l' and parts connected thereto and operated thereby are restored to normal position, the center-pin L engages the record just placed upon the turn-table, the sound-box is lowered into engagement with the record and the nut n connected to the sound-box is lowered into engagement with the feed-screw N. The operation of the shifter mechanism is then arrested by the reëngagement of the pin 72 with the fan governor J. The reproduction of the record is then begun. When the movement of the sound-box across the record is completed, the operating motor therefor and for the turn-table is arrested, as described, by the engagement of the pin 132 on the chain 19 with the arm 133 which presses the

governor arm 25 against the disk 24. At the same time, the rod 135 is operated to permit the insertion of another coin in the controlling mechanism so that the machine is ready for the next operation.

It is obvious that numerous details set forth can be changed and modified without departure from the essentials of the invention as defined in the claims.

I claim as my invention:—

1. In talking machines, the combination with record-rotating means and a reproducer, of a shifter for moving records to and from operative relation with said rotating means and said reproducer, shiftable means for holding the record in operative position, and means for moving said shifter out of contact with the records when the latter are in operative position, substantially as described.

2. In a talking machine, the combination with a turn-table and a reproducer, of a shifter for moving the records into and out of operative relation with said turn-table and said reproducer, means for operating said shifter to place a record on the turn-table, shiftable means for holding the record in operative position on said turn table and means for giving said shifter a slight backward movement out of contact with the record on the turn-table, substantially as described.

3. In a talking machine, the combination with a horizontal turn-table, rotating means therefor and a reproducer, of a center pin coöperating with said turn-table to hold the records thereon, a shifter for moving the records to and from operative position on said turn-table, mechanism for successively operating said center-pin and said shifter, and independent means for moving said shifter out of contact with the record on the turn-table, substantially as described.

4. In a talking machine, the combination with a turn-table and a reproducer, of a shifter for moving records to and from operative position on said turn-table, an operating arm for said shifter, and a spring-operated arm for giving said shifter a slight backward movement at the end of its operation, substantially as described.

5. In a talking machine, the combination with a turn-table and a reproducer, of a sliding carriage for shifting records into and out of operative relation on said turn-table, a shifter-arm for said carriage, cam mechanism for operating said shifter-arm, and a pivoted spring-operated lever for giving said carriage a slight backward movement at the end of its operation, substantially as described.

6. In a talking machine, the combination with a turn-table, a reproducer and a record magazine, of a sliding carriage for shifting the records between said magazine and said turn-table, motor driven mechanism for shifting said carriage and said reproducer, and means independent of said mechanism for giving said carriage a slight backward movement at the end of its operation to throw the same out of contact with the record on the turn-table, substantially as described.

7. In a talking machine, the combination with a turn-table and a reproducer, of a pair of record magazines arranged on opposite sides of said turn-table, a slide having parts for embracing a record on the turn-table and one of the records in one of said magazines, means for alternately shifting said slide in opposite directions at the succeeding operations of the machine to replace the record on the turn-table in its magazine and move a record from the other magazine onto the turn-table at each operation, and means for giving the slide a slight backward movement at the end of its operation to shift the same out of contact with the record on the turn-table, substantially as described.

8. In a talking machine, the combination with a horizontal turn-table, of a pair of vertically shiftable magazines on opposite sides of said turn-table, a sliding carriage having arms for embracing a record on the turn-table and a record in one of said magazines, cam mechanism for throwing said carriage alternately in opposite directions at the succeeding operations of the machine, and a spring-operated lever coöperating with abutments on the carriage for giving the latter a slight backward movement at the end of its shift in either direction, substantially as described.

9. In a talking machine, the combination with a horizontal turn-table and a reproducer, of a vertically shiftable magazine at one side of said turn-table, a sliding carriage for moving records between said magazine and said turn-table, a manually operated shifter for vertically adjusting said magazine to bring any one of the records thereof into position to be engaged by said carriage, a lever arm pivoted on the frame of the machine, means connecting the end of said lever arm to said magazine, a counterbalancing spring connected to said arm between its ends, and a screw connected to said counterbalancing spring for adjusting the tension thereof, substantially as described.

10. In a talking machine, the combination with a turn-table and a reproducer, of a record magazine shiftable to bring any one of the records thereon in line with said turn-table, means for preventing the displacement of all the records in said magazine except the one opposite said turn-table, a shifting part for moving the records between said turn-table and said magazine, and a

spring device for centering records of varying size in said magazine, substantially as described.

11. In a talking machine, the combination with a horizontal turn-table and a reproducer, of a vertically shiftable record magazine on one side of said turn-table, a pair of stationary pins arranged to engage openings in the records in said magazine, the adjacent ends of said pins being spaced apart to free the record in the magazine opposite the turn-table, a shifting slide for moving the records between said turn-table and said magazine, and resilient means for centering records of varying size in said magazine, substantially as described.

12. In a talking machine, the combination with a horizontal turn-table and a reproducer, of a magazine on one side of said turn-table vertically shiftable to bring any one of the records thereon in line with the turn-table, a pair of stationary pins for engaging central openings in the records in said magazine, the adjacent ends of said pins being spaced apart to free the record in the magazine opposite the turn-table, a sliding carriage for moving the records back and forth between said magazine and said turn-table, and a pair of centering stop-springs against which the record is moved by said carriage when it is returned to said magazine, substantially as described.

13. In a talking machine, the combination with record-rotating means and a turn-table, of a record magazine, means for shifting the records back and forth between said magazine and said turn-table, means for shifting said magazine to bring any one of the records thereon in position to be moved onto said turn-table, a manually operable part for actuating said magazine shifting means and an automatically operated clutch for connecting and disconnecting said shifting means and said part, substantially as described.

14. In a talking machine, the combination with a turn-table, of a record magazine shiftable to bring any one of the records thereon in position to be moved onto said turn-table, a shifter for moving said records back and forth between said magazine and said turn-table, manually operable record selective means for shifting said magazine, and clutch mechanism for throwing said selective means into and out of operation, said clutch mechanism being controlled by the movement of said shifter, substantially as described.

15. In a talking machine, the combination with a horizontal turn-table, of a record magazine on one side of said turn-table, a shifter for moving the records back and forth between said magazine and said turn-table, manually operable record selective means for vertically moving said magazine to bring any one of the records thereon into position to be engaged by said shifter, a clutch for throwing the record selective means into and out of operation, and mechanism for operating said shifter and for controlling said clutch, substantially as described.

16. In a talking machine, the combination with a horizontal turn-table and a reproducer, of a pair of record magazines on opposite sides of said turn-table, a shifting slide having parts for engaging a record on the turn-table and one of the records in said magazine, separate manually operable devices for vertically adjusting said magazines to bring any one of the records thereon into engagement with said slide, clutches for alternately throwing said record selecting devices into and out of operation, and mechanism for operating said slide and for controlling said clutches, whereby the full magazine can be shifted to select a record while the other from which a record has been removed, is held stationary until such record is returned thereto, substantially as described.

17. In a talking machine, the combination with a horizontal turn-table, of a pair of record magazines on opposite sides of said turn-table, a sliding carriage for shifting records between said magazines and said turn-table, said carriage being arranged to embrace a record on the turn-table and a record in one of said magazines, a pair of shifters for moving said record magazines vertically to bring any one of the records thereon in line with said turn-table and into position to be engaged by said carriage, a pair of manually operable parts for operating said shifters, clutches for connecting said parts and said shifters, a pair of shifter-arms for said clutches, and mechanism for alternately shifting said carriage in opposite directions at successive operations of the machine and for alternately throwing said clutches into and out of operation through the medium of said clutch shifter-arms, substantially as described.

18. In a talking-machine, the combination with a horizontal turn-table and a reproducer, of a record magazine comprising a vertical frame and a series of pairs of arms projecting inwardly from said frame arranged on one side of said turn-table for supporting a series of flat disk records, a pair of guide-rods for said frame, rollers at the upper portion of said frame engaging the outer sides of said rods, rollers at the lower portion of said frame engaging the inner sides thereof, a counter-balance connected to said magazine, means for vertically adjusting the same to bring any record thereon opposite said turn-table, and a part for shifting said record onto the turn-table, substantially as described.

19. In a talking machine, the combination with a turn-table and a reproducer, of a pair of magazines on opposite sides of said turn-table, a shifting part having means for embracing a record on the turn-table and one of the records in one of said magazines, means for alternately operating said shifting part on successive operations of the machine to move the record on the turn-table back into one of the magazines and to move a record from the other magazine onto the turn-table at each operation of the machine, selecting devices for shifting said magazine to bring any one of the records thereon into position to be engaged by said shifting part, means for preventing the movement of a magazine from which a record has been removed, indicators for the separate magazines and shiftable indicating devices for designating the full magazine from which the selection must be made, substantially as described.

20. In a talking machine, the combination with record rotating means and a reproducer, of a record magazine, shifter mechanism for moving the records back and forth between said magazine and said turn-table and for moving the reproducer to commence the record, an operating spring motor for said shifter mechanism, controlling stop devices for limiting the extent of movement of said shifter motor, a catch for said stop device and means for winding said motor arranged to successively release said catch and said stop device, substantially as described.

21. In a talking machine, the combination with a horizontal turn-table and a reproducer, of a record magazine, shifting mechanism for moving the records back and forth between said magazine and said turn-table and for moving the reproducer to commence the record, a main operating shaft for said shifter mechanism, a drum on said shaft having a pawl-and-ratchet connection therewith a cord coiled about said drum and connected thereto, a spring connected to one end of said cord, a pivoted lever connected to the other end of said cord, a motor-spring connected to said lever, a governor driven from said shaft, a stop engaging said governor, a controlling cam driven by said shaft and cooperating with said stop to limit the extent of movement of said shaft, a catch for said stop, a shifting arm whereon said stop is mounted, means arranged to engage said lever to wind up said motor-spring, and a lug on said lever arranged to successively release said catch and said stop at the end of the winding movement of said lever, substantially as described.

22. In a talking machine, the combination with a horizontal turn-table, a magazine for disk records and a shifter for moving the records back and forth between said magazine and said turn-table, of a reproducer, a feed-screw for said reproducer, a motor for operating said feed-screw and said turn-table needle changing mechanism and shifter mechanism for moving said reproducer out of operative relation with said turn-table and said feed-screw and for moving the same to said needle changing mechanism and back to a position to commence the record and into engagement with said feed screw, said screw serving to positively feed the sound box over the record and into position to engage said needle changing mechanism, substantially as described.

23. In a talking machine, the combination with a turn-table, of a record magazine, a part for moving the record back and forth between said magazine and said turn-table, means for shifting the magazine to bring any one of the records thereon into position to be engaged by said part, a reproducer, a feed screw for said reproducer, a motor for operating said turn-table and said feed-screw needle changing mechanism and shifter mechanism for automatically operating said record-shifting parts and for moving said reproducer out of operative relation with said turn-table and said feed-screw into engagement with said needle changing mechanism and back to a position to commence the record, substantially as described.

24. In a talking machine, the combination with a horizontal turn-table and mechanism for rotating the same, of a reproducer arm having a sound box on its inner end, a supporting member to which said arm is resiliently connected at its outer end to yield slightly in horizontal direction, a horizontal guide rod whereon said supporting member is pivotally and slidably mounted, a feed screw parallel to said guide rod and driven by said turntable operating mechanism, a segment nut movably mounted upon said supporting member and spring-pressed into engagement with said feed screw, said arm and supporting member being free to oscillate vertically on said guide rod during the reproduction of the record without disturbing the engagement of said nut with said screw, and a vertically movable track bar beneath said sound box arm for swinging the latter and said supporting member upon said guide rod, said supporting member having a part arranged to engage said spring held segment nut and hold the latter out of engagement with said feed screw when said reproducer arm is raised, substantially as described.

25. In a talking machine, the combination with a turntable and mechanism for rotating the same, of a reproducer arm having a sound box on its inner end, a horizontal guide rod whereon said arm is pivotally and slidably mounted at its outer end, a feed screw parallel to said guide rod and driven by said turntable operating mechanism, a

segment nut pivotally mounted upon the outer end of said reproducer arm, a spring extending between said nut and said arm for yieldingly holding the latter into engagement with said feed screw, and shifter mechanism for automatically lifting said arm and sound box, moving the same outwardly to commence a record, and for lowering the same into operative relation with the record, said arm having a lug arranged to engage said pivoted, spring-held nut to hold the same out of engagement with said screw when said reproducer arm is raised, substantially as described.

26. In a talking machine, the combination with a turntable and mechanism for rotating the same, of a reproducer arm having a sound box on its inner end, a supporting member to which said arm is resiliently connected at its outer end to yield slightly in horizontal direction, a horizontal guide rod whereon said supporting member is pivotally and slidably mounted, a feed screw parallel to said guide rod and driven by said turntable operating mechanism, a spring held segment nut on said supporting member arranged to engage said feed screw to propel said arm along said guide rod, a vertically movable track bar extending beneath said reproducer arm for raising and lowering the same, said supporting member having a part arranged to engage said spring held nut to hold the latter out of engagement with said feed screw when said arm is raised, a shiftable arm arranged to engage said supporting member to move said reproducer arm along said track bar when the latter is raised, and mechanism for operating said track bar and said shifter arm, substantially as described.

27. In a talking machine, the combination with a turn-table, of a hollow reproducer arm having a sound-box at its inner end, a feed-screw for propelling said arm transversely across the record, an amplifying horn, a connecting tube between said horn and said arm comprising two telescopic sections having ball and socket joints with said parts and having a spring tending to extend said sections, substantially as described.

28. In a talking machine, the combination with a turn-table, of a reproducer arm having a sound-box at its inner end, a needle-changing mechanism, a shifter for lifting said reproducer away from said turntable and into operative relation with said needle-changing mechanism, a shifter for moving said reproducer arm outwardly to commence the record, an operating spring for said second shifter arranged to be placed under tension by said first-mentioned shifter and means for retarding the operation of said second shifter until after said reproducer arm has been elevated by said first-mentioned shifter, substantially as described.

29. In a talking machine, the combination with a sound-box and a needle magazine, a needle clamp and an ejector finger mounted on said sound-box, a cam plate fixed to the frame of the machine and having parts arranged to release said needle clamp and operate said ejector finger, and means for elevating said sound-box to bring said needle clamp and ejector finger into operative relation with the parts of said cam plate, said elevating means having a part for effecting the discharge of a needle from said magazine, substantially as described.

30. In an automatic talking machine, the combination of a turn-table and a sound-box, of a needle magazine, means for automatically shifting said sound-box and for automatically changing the needles in said sound-box, a sliding carriage for changing the records arranged below said needle changing mechanism, a cup for containing the used needles mounted on said carriage and a device for collecting the used needles and discharging the same into said cup, substantially as described.

31. In a talking machine, the combination with a turn-table, and means for automatically changing the records thereon, of a sound-box, a needle magazine, means for automatically ejecting the old needle in the sound-box and providing the same with a new one from said magazine and for restoring said sound-box to commence the record, and means controlled by said magazine for preventing the operation of the machine when the magazine is empty, substantially as described.

32. In a talking machine, the combination with a sound box having a needle clamp, and an open-ended tube above said clamp adapted to hold a second needle, of an ejecting finger arranged to engage said second needle to force it into engagement with said clamp and eject the used needle, a cam plate for automatically and successively releasing said clamp and operating said ejecting finger, a spring for holding the new needle in position while the clamp is released, a needle magazine, and means for effecting the discharge of a needle therefrom through the open upper end of said tube, substantially as described.

33. In a talking machine, the combination with a turn-table, a sound-box movable over said turn-table, a needle clamp and an ejector finger mounted on said sound-box, a needle magazine mounted on the frame of the machine, a cam plate mounted on the frame of the machine and having parts arranged to release said needle clamp and operate said ejector finger, means for elevating said sound-box to bring said needle clamp and said ejector finger successively into operation with the parts of said cam plate and means for discharging a nee-

dle from said magazine into said sound-box, substantially as described.

34. In a talking machine, the combination with a turn-table, of a sound-box movable over said turn-table, a needle clamp and an ejector finger movably mounted on said sound-box, an open-ended tube on said sound-box above said needle clamp adapted to hold a second needle, a fixed cam plate having parts arranged to release said needle clamp and operate said ejector finger, means for raising said sound-box to bring said needle clamp and ejector finger into operative relation with the parts of said cam plate, a needle magazine, and means for effecting the discharge of the needle therefrom through the upper open end of said tube, substantially as described.

35. In a talking machine, the combination with a turntable and a reproducer, of a pair of record magazines on opposite sides of said turntable, a shifter arranged to engage a record on the turntable and in one of said magazines, means for laterally moving said shifter in opposite directions in succeeding operations of the machine to replace the record on the turntable in its magazine and move a record from the other magazine onto the turntable, and means for imparting to the shifter a slight backward movement at the end of its operative movement in either direction to thereby move the same out of contact with the record on the turntable, substantially as described.

36. In a talking machine, the combination with a horizontal turntable and a reproducer, a pair of record magazines on opposite sides of said turntable, separate, manually operable devices for vertically adjusting said magazines to select anyone of the records thereon, shifter mechanism for moving a record on the turntable into its magazine and for withdrawing a record from the other mechanism onto the turntable, clutches for alternately throwing said manually operable, record selecting devices into and out of operation, and means actuated by said shifter mechanism for operating said clutches to thereby permit the movement of the full magazine to select a record and prevent the movement of the other magazine from which a record has been removed, substantially as described.

37. In a talking machine, the combination with a turntable and a reproducer, of a pair of magazines on opposite sides of said turntable, shifter mechanism for moving a record from the turntable into one of said magazines and for moving a record from the other magazine onto said turntable, selecting devices for moving said magazines to bring one of the records thereon into position to be moved by said shifter mechanism, means for preventing the movement of the magazine from which a record has been removed, and movable indicating devices actuated by said shifter mechanism for designating the full magazine from which a selection can be made, substantially as described.

JOHN GABEL.

Witnesses:
HARRY L. CLAPP,
KATHARINE GERLACH.