(12) PATENT
(19) AUSTRALIAN PATENT OFFICE

(11) Application No. **AU 199921338 B2**
(10) Patent No. **725769**

(54) Title
Electronic apparatus having an environmentally sealed external enclosure

(51)[6] International Patent Classification(s)
H05K 007/20 H04B 001/036
G12B 015/06

(21) Application No: 199921338 (22) Application Date: 1999.03.22

(30) Priority Data

(31) Number	(32) Date	(33) Country
98302167	1998.03.24	GB

(43) Publication Date : 1999.10.07
(43) Publication Journal Date : 1999.10.07
(44) Accepted Journal Date : 2000.10.19

(71) Applicant(s)
Lucent Technologies Inc

(72) Inventor(s)
William George Gates

(74) Agent/Attorney
SPRUSON and FERGUSON,GPO Box 3898,SYDNEY NSW 2001

(56) Related Art
EP 771138
JP 8-078589
JP 9-093184

ABSTRACT

ELECTRONIC APPARATUS HAVING AN ENVIRONMENTALLY SEALED EXTERNAL ENCLOSURE

Electronic apparatus is disclosed having components (4,6,8,10) mounted within an environmentally sealed external enclosure (2). The enclosure is made of heat conductive material and ones of the components are mounted in heat conductive association with one or more walls (16,22,24) of the enclosure. At least one heat pipe (46) has an evaporator in thermally conductive contact with a wall of the enclosure proximate a said one of the components. Its condenser is located outside the enclosure and is provided with thermally conductive fins (54a). Components (44) which generate large amounts of heat can thus be provided with additional cooling reducing local hot spots. The enclosure may be designed for the larger market in temperate climates, and to modified for hotter climates.

S & F Ref: 453190

AUSTRALIA

PATENTS ACT 1990

COMPLETE SPECIFICATION

FOR A STANDARD PATENT

ORIGINAL

Name and Address of Applicant:	Lucent Technologies Inc 600 Mountain Avenue Murray Hill New Jersey 07974-0636 UNITED STATES OF AMERICA
Actual Inventor(s):	William George Gates
Address for Service:	Spruson & Ferguson, Patent Attorneys Level 33 St Martins Tower, 31 Market Street Sydney, New South Wales, 2000, Australia
Invention Title:	Electronic Apparatus Having an Environmentally Sealed External Enclosure

The following statement is a full description of this invention, including the best method of performing it known to me/us:-

ELECTRONIC APPARATUS HAVING AN ENVIRONMENTALLY SEALED EXTERNAL ENCLOSURE

This invention relates to electronic apparatus having components mounted within an environmentally sealed external enclosure.

Much electronic apparatus requires cooling. In many cases this is effected by blowing air through the enclosure via vents. Within the enclosure components which generate large amounts of heat may be mounted on heat sinks either individually or in groups. In some situations, for example when the apparatus is to be used outside, the external enclosure must be environmentally sealed. One example is the base station equipment for a mobile communications network, where an enclosure containing a transmitter/receiver, a power amplifier, a processor and other units, is mounted outside e.g. on a pole. The environmental seal prevents air from being blown through the enclosure. Conventionally, the enclosure may be provided with extended surfaces to increase its surface area so allowing the whole enclosure to be cooled by convection. In some instances it is difficult to cool the enclosure sufficiently, particularly in the region of components which generate relatively large amounts of heat.

AUSTRALIAN PATENT OFFICE

In accordance with one aspect of the present invention, there is provided an electronic apparatus having components mounted within an environmentally sealed external enclosure, the enclosure being made of heat conductive material and one of the components being mounted in heat conductive association with one or more walls of the enclosure, a plurality of heat pipes each having an evaporator extending inside the enclosure and in thermally conductive contact with a wall of the enclosure proximate a said one of the components and having a condenser located outside the enclosure, said condenser being provided with thermally conductive fins, the enclosure being in two parts sealed together along a joint and separately containing respective components so that at least one wall of the container is in two parts, at least one heat pipe extending through each part of one such wall and having its evaporator in said thermal conductive contact with another wall of the respective part of the enclosure, the heat pipes being spaced from one another in a direction along the joint between the two part enclosures, including a plurality of heat pipes in at least one of the part enclosures, wherein fins are common to all the heat pipes on each part enclosure, the fins on heat pipes on different part enclosures being spaced different distances from the enclosure, and wherein fins on each part enclosure are notched to receive the heat pipes on the other part enclosure.

Components which generate large amounts of heat can thus be provided with additional cooling reducing local hot spots. The enclosure may be designed for the larger market in temperate climates, and to modified for hotter climates.

Preferably, the heat pipes are spaced from one another in a direction along the joint between the two part enclosures.

The apparatus may include a plurality of heat pipes in at least one of the part enclosures.

In that form, fins are preferably common to all the heat pipes on each part enclosure, the fins on heat pipes on different part enclosures being spaced different distances from the enclosure.

AUSTRALIAN PATENT OFFICE

Fins on each part enclosure are preferably notched to receive the heat pipes on the other enclosure.

The cooling effect of the heat pipes may be significantly increased by a blower to force air across the condensers of the heat pipes.

One embodiment of the invention will now be described, by way of example, with reference to the accompanying drawings, in which;

Figure 1 is a vertical cross section through apparatus embodying the invention in the form of base station equipment for a mobile telecommunications network; and

Figure 2 is a plan view of the equipment of Figure 1 with the top of a cover removed.

Referring to the drawings, base station equipment for a mobile telecommunications network has a thermally conductive external enclosure 2 cast, for example from light metal in two parts 2a and 2b environmentally sealed around a joint between two flanges 2c. The enclosure contains two transmitter/receiver units 4, two power amplifiers 6, two duplexers 8 and a processor board 10. The transmitter/receiver units 4 and power amplifiers 6 are shielded against radio frequency emissions by aluminium cases 12 and 14. The two power amplifiers 6 are mounted side by side on a wall 16 of the container so only one is visible in Figure 1. Similarly the two duplexers 8 are mounted side by side on the wall 16. The power amplifiers

and duplexers are thus in thermally conductive contact with the walls 16. A circuit board 20 is mounted in contact with a wall 22 of the case 14 so that components on the board are in conductive association with the wall 16, that is to say heat generated by a component can be conducted to the wall 16 via the circuit board 20 and the wall 22 of the case 14.

The processor board 10 is mounted directly on a wall 24 opposite the wall 16, again in thermally conductive contact. Components on the processor board 10 are thus also in thermally conductive association with the wall 24.

The transmitter/receiver units 4 are mounted on pillars 26 over the processor board 10.

The external enclosure 2 is contained by a ventilated case 28 having a vents 30 in its bottom 32, louvres 34 in its side wall 36 and apertures covered by grills 38 also in the side walls 36 near their top. The walls 16 and 24 have extended surfaces 40 which project into air passages 42 between the enclosure 2 and the case 28.

Components in the enclosure are thus cooled by thermal conduction to and through the walls 16 and 24 of the enclosure 2 and by natural convection over the extended surfaces 40.

Some components e.g. power transistors 44 generate such large amounts of heat that the cooling already described is insufficient. Such local hot spots are cooled by heat pipes 46. The evaporator of each heat pipe 46 is pressed into a groove 48 in the wall 16 or 24 so as to

extend to the hot spot in the region of a component such as the power transistors 44 which generate relatively large amounts of heat. Each heat pipe extends from its groove 48 through an aperture 50 in the part 52a or 52b or the top wall 52 belonging to the part 2a or 2b of the enclosure in which it is mounted. The heat pipes may be sealed in their apertures by, for example, a silicone sealant. As may be seen from Figure 2, the heat pipes are spaced in a direction along the joint between the flanges 2c. A set of heat conductive transverse fins 54a is common to the evaporators of the heat pipes 46 extending from the part 2a of the enclosure. The fins 54a have notches 56a to accommodate the heat pipes extending from the other part 2b of the enclosure. Similarly, a set of heat conductive transverse fins 54b is common to the heat pipes extending from the part 2b of the enclosure. The fins 54b are interleaved between the fins 54a. The fins 54b have notches 56b to accommodate the heat pipes extending from the other part 2b of the enclosure.

Provision of the finned heat pipes greatly improves the cooling especially at the hot spots where they terminate.

Further improvement may be obtained by forcing convection over the fins. To that end, a blower in the form of an electrically driven fan 58 is provided inside one or both aperture 38.

In the embodiment shown, the evaporators of the heat

pipes pass through the top wall of the enclosure. In an alternative (not shown) the evaporators are pressed into a groove on the outside of the walls of the enclosure.

The claims defining the invention are as follows:

1. An electronic apparatus having components mounted within an environmentally sealed external enclosure, the enclosure being made of heat conductive material and one of the components being mounted in heat conductive association with one or more walls of the enclosure, a plurality of heat pipes each having an evaporator extending inside the enclosure and in thermally conductive contact with a wall of the enclosure proximate a said one of the components and having a condenser located outside the enclosure, said condenser being provided with thermally conductive fins, the enclosure being in two parts sealed together along a joint and separately containing respective components so that at least one wall of the container is in two parts, at least one heat pipe extending through each part of one such wall and having its evaporator in said thermal conductive contact with another wall of the respective part of the enclosure, the heat pipes being spaced from one another in a direction along the joint between the two part enclosures, including a plurality of heat pipes in at least one of the part enclosures, wherein fins are common to all the heat pipes on each part enclosure, the fins on heat pipes on different part enclosures being spaced different distances from the enclosure, and wherein fins on each part enclosure are notched to receive the heat pipes on the other part enclosure.

2. An apparatus as claimed in any one of the preceding claims, including a blower to force air across the condensers of the heat pipes.

3. An electronic apparatus substantially as described herein with reference to Figs. 1 and 2.

DATED this Tenth Day of August, 2000

Lucent Technologies Inc.

Patent Attorneys for the Applicant

SPRUSON & FERGUSON

AUSTRALIAN PATENT OFFICE

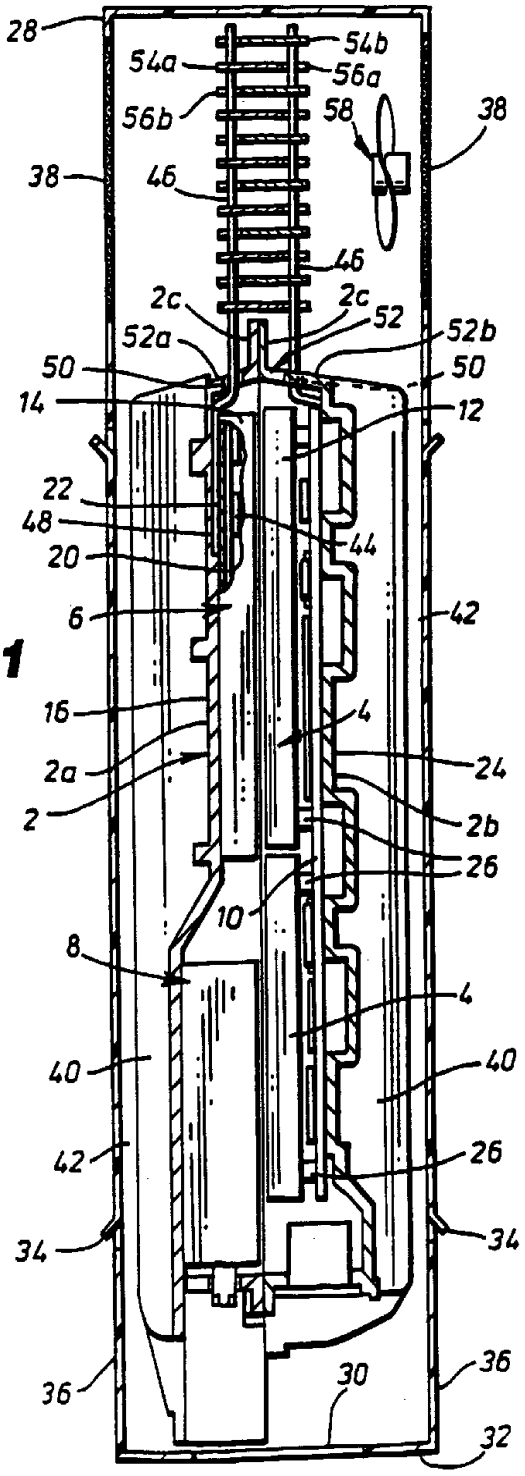
28
54a
54b
56a
56b
58
38
38
46
46
2c
2c
52
52a
52b
50
50
14
12
22
48
44
20
6
42
16
4
2a
24
2
2b
26
10
8
4
40
40
42
26
34
34
36
30
36
32

FIG. 1

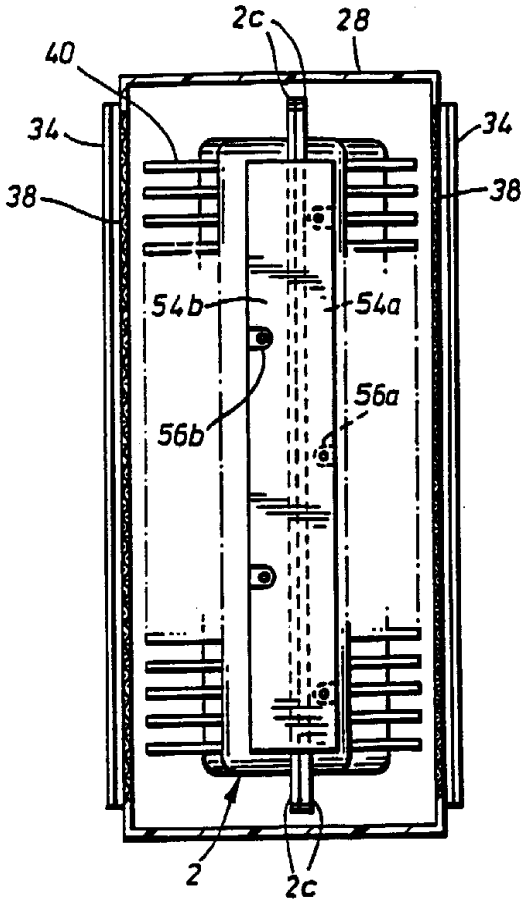

FIG. 2