Office de la Propriété Intellectuelle du Canada
Un organisme d'Industrie Canada

Canadian Intellectual Property Office
An agency of Industry Canada

CA 2151625 C 2001/09/04

(11)(21) 2 151 625

(12) BREVET CANADIEN
CANADIAN PATENT

(13) C

(22) Date de dépôt/Filing Date: 1995/06/13

(41) Mise à la disp. pub./Open to Public Insp.: 1995/12/25

(45) Date de délivrance/Issue Date: 2001/09/04

(30) Priorité/Priority: 1994/06/24 (6-166020) JP

(51) Cl.Int.^{6}/Int.Cl.^{6} G11B 31/00, G10H 1/36

(72) Inventeurs/Inventors:
Higuchi, Tsuneo, JP;
Kakehashi, Ikutaro, JP

(73) Propriétaire/Owner:
Roland Kabushiki Kaisha, JP

(74) Agent: STIKEMAN, ELLIOTT

(54) Titre : SYSTEME D'EFFETS SPECIAUX POUR KARAOKE
(54) Title: EFFECT ADDING SYSTEM

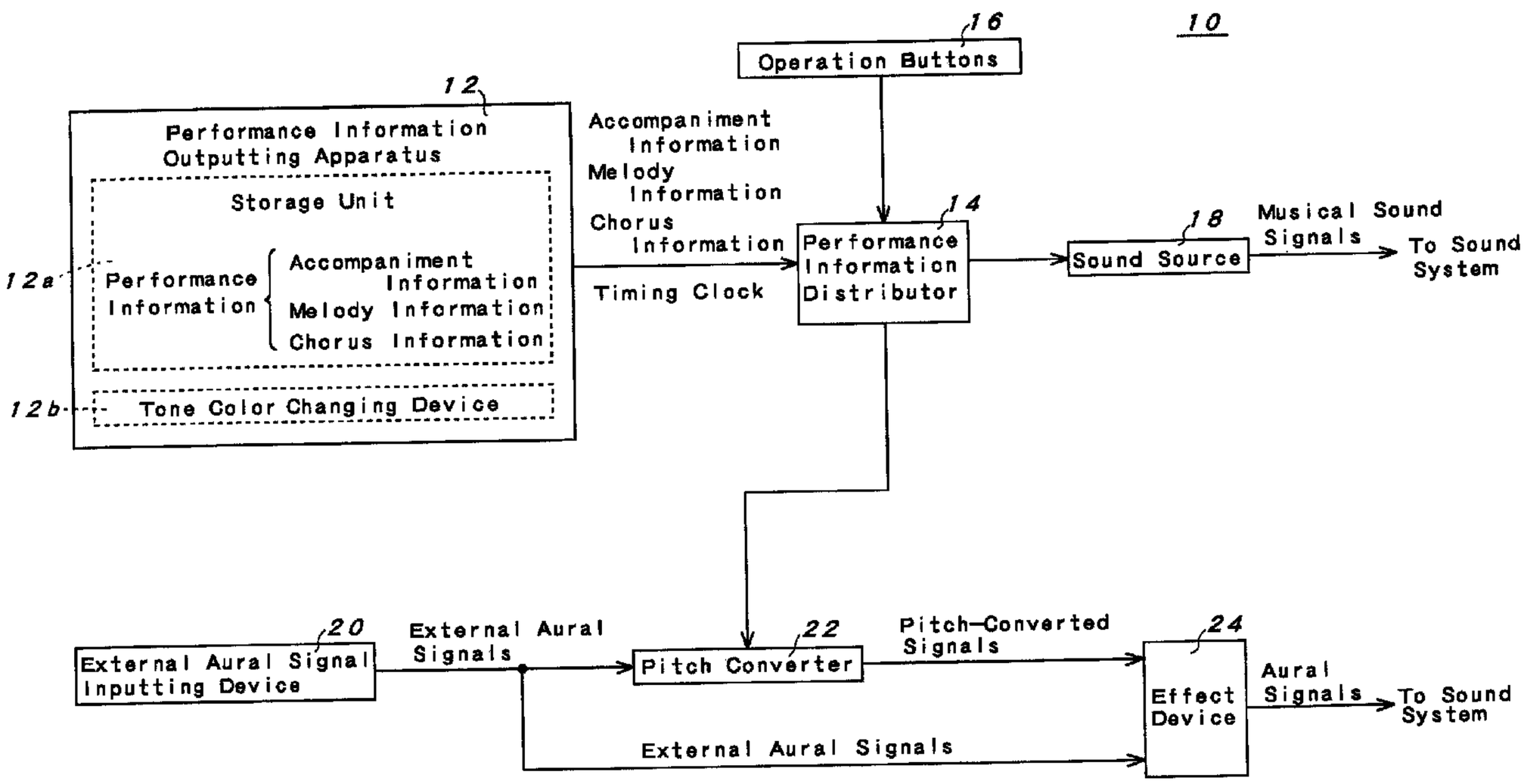

(57) Abrégé/Abstract:
A sound effect adding system for use in a karaoke performance is provided which, when one person sings at a pitch differing from that required for a song, or with different timing from that of the song, automatically yields, in part, the same effect as if a chorus, duet or round is being performed by a plurality of persons. In one embodiment, the sound effect adding system accomplishes this by means of pitch conversion and/or delay of the audio input signal in response to pitch conversion and/or delay information deriving from stored performance information for a particular musical composition.

ABSTRACT OF THE DISCLOSURE

A sound effect adding system for use in a karaoke performance is provided which, when one person sings at a pitch differing from that required for a song, or with different timing from that of the song, automatically yields, in part, the same effect as if a chorus, duet or round is being performed by a plurality of persons. In one embodiment, the sound effect adding system accomplishes this by means of pitch conversion and/or delay of the audio input signal in response to pitch conversion and/or delay information deriving from stored performance information for a particular musical composition.

EFFECT ADDING SYSTEM

FIELD OF THE INVENTION

The present invention relates to a sound effect adding system, and more particularly to a sound effect adding system which is suitable for use in a karaoke system (singing-accompaniment machine).

DESCRIPTION OF THE RELATED ART

Recently the spread of karaoke machines into bars, restaurants, homes and the like is remarkable and karaoke singing to the accompaniment of a karaoke machine is enjoyed widely in bars, restaurants or homes.

A system is known wherein accompaniment sounds are stored as performance information, and a sound source is driven on the basis of the performance information to reproduce the accompaniment sounds. In a conventional karaoke machine, audio signals of accompaniment sounds are recorded, and reproduced on demand.

In karaoke systems of the above described type wherein a sound source is driven on the basis of performance information, use is made of MIDI (Musical Instrument Digital Interface) specifications for hardware (transmitter-receiver circuit) and software (data format) which is established for interconnecting different musical instruments or automatically connecting performing device, sound source, sound effect device, computer, lighting control, mixer and the like whereby the exchange of information.

U.S. Patent No. 5,294,746 discloses a karaoke machine in which background chorus is stored in PCM to reproduce the same. In the invention of U.S. Patent No. 5,294,746 the background chorus is maintained as a number of patterns, and a

pattern which is most suitable as accompaniment is selected and reproduced, or rather than using simple PCM, ADPCM wherein data compression is performed has been utilized. However, there is still a problem in that the amount of data for performing back chorus becomes extensive, and a disadvantage in that because one of the patterns must be selected from limited patterns, the optimal chorus cannot be obtained.

OBJECT AND SUMMARY OF THE INVENTION

An object of the invention is to provide a solution to such problems by providing a sound effect adding system wherein, in karaoke performance application, when one person sings, and another is singing at a different pitch, a sound effect addition is automatically performed, whereby it appears that a chorus, duet or the like is being performed by a plurality of persons rather than by a single person.

Another object of the invention is to provide an effect adding system wherein, in karaoke performance application, when a first person sings, and another sings with a different timing from that of the first person, a sound effect is automatically performed, whereby it appears that a background chorus is singing.

In order to achieve the above objects, the effect adding system according to the present invention comprises an input means for inputting audio signals from the outside; accompaniment sound producing means for producing accompaniment sounds to a musical composition; storage means for storing prescribed performance information concerning said musical composition; pitch conversion information outputting means for outputting pitch conversion information for pitch conversion based on the prescribed performance information stored in said storage means in

synchronous with the accompaniment sounds produced by said accompaniment sound producing means; and a pitch-converting means for converting the pitch of the audio signals inputted from said input means in response to the pitch conversion information output from said pitch conversion information outputting means to output the audio signals of the converted pitch.

Accordingly, the audio signals inputted from the outside through the input means by singing words of a musical composition are pitch-converted on the basis of prescribed performance information for the musical composition, for example, chorus information expressing the chorus to be added to the melody of the musical composition stored in the storage means so as to correspond to the pitch of the chorus expressed by the chorus information. The pitch-conversion is carried out by outputting pitch conversion information from the pitch conversion information outputting means to the pitch-converting means in synchronism with the accompaniment sounds produced by the accompaniment sound producing means.

In this situation, the audio signals inputted to the input means are pitch-converted in synchronism with the production of accompaniment sounds of the musical composition from the accompaniment sound producing means to output the audio signals of the converted pitch, whereby a voice with a different pitch from that of the audio signals inputted to the input means is reproduced in synchronism with the accompaniment sounds, so that the same effect as produced by a chorus is obtained.

Moreover, the sound effect adding system according to the invention includes storage means for storing performance information of a musical composition; automatic performance means for outputting performance control information

effecting production and control of musical sounds on the basis of the performance information stored in said storage means; and delay means for outputting the audio signals inputted with a delay time based on the performance control information output from said automatic performance means; the performance information stored in said storage means containing tempo information expressing a performance tempo of the musical composition, whereby the delay time of said delay means is set on the basis of the performance control information corresponding to said tempo information and output from said automatic performance means.

Accordingly, the audio signals inputted are outputted with a time delay set by the delay means on the basis of the performance control information corresponding to tempo information, whereby the effect is the same as if others were singing in melody or a background chorus is present for both the inputted audio signals which have not been delayed and those which have been delayed.

BRIEF DESCRIPTION OF THE DRAWINGS

The invention is described in greater detail with reference to the accompanying drawings, wherein:

Figure 1 is a block diagram of a first embodiment of a sound effect adding system according to the present invention;

Figures 2(a) and 2(b) are block diagrams of elements of the effect adding system of Fig. 1;

Figure 3 is a block diagram of a second embodiment of the sound effect adding system of the present invention;

Figure 4 is a block diagram of a third embodiment of the sound effect adding system of the present invention;

Figure 5 is a block diagram of a pitch converter used in the system of Fig. 1, 3 or 4;

Figure 6 is a block diagram of an external audio signal inputting means, a pitch converter and an effect device used in the system of Fig. 1, 3 or 4;

Figure 7 is a block diagram of an external audio signal inputting device, a pitch converter and an effect device used in the system of Fig. 1, 3 or 4; and

Figure 8 is a circuit diagram of a sound volume balancing circuit used in a system in accordance with the invention.

DETAILED DESCRIPTION OF THE PREFERRED EMBODIMENTS

Embodiments of the sound effect adding system according to the present invention are described in detail below in conjunction with the accompanying drawings. It will be noted that in the following description, the effect adding system utilizes MIDI signals, being event information for controlling elements of the system.

Figure 1 is a block diagram of a sound effect adding system according to the first embodiment of the present invention. The whole operation of the effect adding system is controlled by means of a microcomputer, so that the system may be used, as a matter of course, for karaoke performance. Moreover, the effect adding system can be used also for systems other than that of karaoke systems such as background music (BGM) systems and the like.

Referring to Fig. 1, effect adding system 10 includes a performance information outputting apparatus 12 for outputting musical performance information for use in karaoke and BGM performances; a performance information distributor 14 for distributing the performance information output from the performance information outputting apparatus 12; operating buttons 16 for providing instructions to the

performance information distributor 14; a sound source 18 for generating musical sound signals based on the performance information distributor 14; an external audio signal inputting device 20 for inputting singing during a karaoke performance, being a device for converting an external voice into electrical audio signals; a pitch converter 22 for converting pitches of external audio signals outputted from the external audio signal inputting device 20; and an effect device 24 for adding prescribed sound effects to the external audio signals from the external audio signal inputting device 20 and the pitch-converted signals which are obtained by pitch-converting the external audio signals by means of the pitch converter 22. The musical sound signals from the sound source 18 and the audio signals from the sound effect device 24 (the external audio signals and the pitch-converted signals which passed through the effect device 24) are broadcast via a sound system including a D/A converter, an amplifier, loudspeakers and the like, whereby a karaoke or a BGM performance is carried out with karaoke accompaniment.

The performance information outputting apparatus 12 includes a storage unit 12a defined by a RAM or the like, which stores performance information, accompaniment information, melodic information and chorus information. By accompaniment information is meant the performance information as to accompaniment sound other than melodies of musical compositions which corresponds to performance information of the accompaniment part in a karaoke performance. By melodic information is meant performance information as to melody of a musical composition which corresponds to performance information of the singing part in a karaoke performance. By chorus information is meant performance information as to chorus to be added to melody of a musical

composition which corresponds to the chorus part other than the melodic information in a karaoke performance.

The performance information outputting apparatus 12 reads the performance information (accompaniment information, melodic information and chorus information) at a prescribed timing to output the information read together with a timing clock to the performance information distributor 14. The timing clock is a message defined in MIDI, and such systems connected with each other in accordance with MIDI connection can synchronize one another by means of the messages transmitted at a rate of twenty-four per quarter note.

The performance information outputting apparatus 12 also includes a tone color changing device 12b which can function to change tone colors of the melodic sounds produced on the basis of melodic information in the sound source 18 and chorus sounds produced on the basis of chorus information dependent upon the case where the effect adding system 10 is used for either a karaoke performance or as BGM.

Generally, in a karaoke performance to assist beginners who are unfamiliar with a karaoke machine and have difficulty in finding timing to start a song or to pick up a musical interval, the machine is arranged such that melodic sounds or chorus sounds for guiding singing are output together with accompaniment sounds, wherein such melodic sounds or chorus sounds are called guide tone. Since such guide tone is for assisting beginners, it is required that the guide tone is not particularly remarkable during karaoke accompaniment. On the other hand, it is necessary for providing clear melodic sounds or chorus sounds in BGM. For this reason, the effect adding system 10 contains a tone color changing device 12b which can be adapted

to change tone colors depending upon whether the use of melodic sounds or chorus sounds is for BGM, the guide tone occurring by switching a tone color switch (not shown) mounted on the tone color changing device 12b.

Moreover, the effect adding system 10 is such that when tone colors of melodic sounds or chorus sounds are switched over depending upon either BGM use of guide tone use in the tone color changing device 12b, the volume of the sound also changes automatically. More specifically, the volume of melodic sounds or chorus sounds is arranged so as to be lower in the case of guide tone use than in BGM use.

Concerning a method of changing tone color and sound volume depending upon whether melodic sounds and chorus sounds are used as BGM or for guide tone purposes as described above, it is sufficient to utilize the method disclosed in applicant's laid open Japanese Patent Application No. 333890/1993.

More specifically, the karaoke system disclosed in the patent application reads karaoke data to transmit karaoke accompaniment sounds including a karaoke data read-out means for reading karaoke date. The system involves a guide tone part performing melodies with instrument sounds; a musical sound producing means for producing musical sounds on the basis of the karaoke data read out by the karaoke data read-out means; a changed data output means outputting the changed data for changing at least either of the tone volume and tone color in the guide tone part; and a change control means for controlling the musical sound-producing means on the basis of the changed data output from the changed data output means to change at least either the tone volume or the tone color in the guide tone

part which are produced by means of the musical sound producing means. In this system, the changed data output means outputs the changed data for changing either one or both of the tone volume and tone color in the guide tone part to the change control means. The change control means controls the musical sound producing means on the basis of the changed data and changes either or both of the tone volume and tone color of musical sounds as to the guide tone part in the musical sounds produced by the musical sound producing means based on karaoke data. As a result, the musical sound producing means produces such musical sounds in which either or both of the tone volume and the tone color recorded in karaoke data in the guide tone part is (are) different, whereby it is possible to perform the guide tone part, being different from karaoke accompaniment. The guide tone part thus performed is such a part in which melodies are performed with instrumental sounds in order to assist karaoke singing by a singer. Accordingly, when such guide tone part in which tone volume and tone color are different from those of karaoke accompaniment is performed, a musical composition with melody which involves a different hearing sensation from that of karaoke accompaniment can be performed so that such performance of the musical composition may be used for BGM purposes.

While the karaoke system disclosed in laid open Application No. 333890/1993 is such that the change control means directly controls the musical sound producing means on the basis of changed data to change tone volume and tone color, the same effect is obtained by the present invention in that the changed data converted by the tone color changing device 12b is supplied to the sound source 18 so as to output as an MIDI signal.

The performance information distributor 14 distributes the performance information (accompaniment information, melody information and chorus information) output from the performance information outputting apparatus 12 to the sound source 18 and the pitch converter 22 positioned downstream of the performance information distributor 14. The distribution of performance information is effected in response to modes established by operation of the buttons 16. The modes established by the buttons 16 are "normal mode" and "melody correction mode".

In the case when the normal mode is selected on the buttons 16, accompaniment information, melody information and chorus information are distributed to the sound source 18, while chorus information and timing clock signals are distributed to the pitch converter 22.

On the other hand, when the melody correction mode is selected on the operating buttons 16, accompaniment information, melody information and chorus information are distributed to the sound source 18, while melody information and timing clock signals are distributed to the pitch converter 22.

As described above, it becomes possible to selectively distribute melody information or chorus information to the pitch converter 22 by switching over the normal mode and the melody correction mode.

The performance information (accompaniment information, melody information and chorus information) distributed by the performance information distributor 14 is inputted to the sound source 18 to produce musical sound signals in response to the performance information. More specifically, the sound source 18 produces musical sound signals of accompaniment sounds for karaoke play, musical

sound signals of melody sounds, and musical sound signals of chorus sounds on the basis of the accompaniment information, the melody information and the chorus information, respectively being supplied to the sound source 18.

With respect to production of musical sound signals of melody sounds and chorus sounds, when tone color information or sound volume information is changed by the tone color changing device 12b, the musical sound signals are produced in accordance with such performance information containing the tone color information and the sound volume information thus changed. In other words, the sound source 18 produces musical sounds in accordance with the performance information which was changed by means of the tone color changing device 12b with respect to melody sounds and chorus sounds, i.e. the sound source 18 produces such musical sounds, the sounds being different in the tone color and volume in a karaoke or BGM performance.

The pitch converter 22 converts the pitch of external audio signals such as karaoke singing and the like inputted from the external audio signal inputting device 20 (a microphone or the like) into the same pitch as that indicated by the chorus information or the melody information supplied from the performance information distributor 14. Accordingly, when normal mode is selected on the operating buttons 16, the pitch of the external audio signals inputted from the external audio signal inputting device 20 is converted by the pitch converter 22 into the same pitch as that of the chorus information supplied by the performance information distributor 14, whereby a voice having the same pitch in a chorus part can be broadcast on the basis of the inputted external audio signals.

Moreover, in the case when the melody correction mode is selected on the buttons 16, the pitch of the external audio signal from the external audio signal inputting device 20 is converted into the same pitch as that of the melody information supplied from the performance information distributor 14, whereby it becomes possible to correct the musical interval of the inputted external audio signal to the precise correct interval indicated by the melody information.

Thus, in the case where the effect adding system 10 is used by someone who cannot sing at the correct musical interval (a so-called tone-deaf person), it is sufficient to select the melody correction mode using the buttons 16. As a result, melody information is supplied to the pitch converter 22, so that the pitch of the external audio signal inputted to the pitch converter 22 is converted into the same pitch as that indicated by the melody information, and singing out of the musical interval can be corrected to the accurate interval.

It is to be noted that the method for pitch conversion effected in the pitch converter 22 is well known, and a variety of methods are proposed below.

For example, as disclosed in laid open Japanese Patent Application No. 174096/1988, it is sufficient that the pitch of inputted audio frequency signals (external audio signals) is detected, a computation is performed on the pitch detected and scale signals (melody information or chorus information) supplied separately, whereby the pitch of the audio frequency signals (external audio signals) is converted into the pitch of the scale signals (melody information or chorus information).

Moreover, in the case where the pitch of the inputted audio signals is changed into a prescribed pitch, the method disclosed in laid open Japanese Patent

Application No. 65098/1987 may be used. In accordance with the method, phonemes of the inputted external audio signals are cut out, and the phonemes are adapted to repeat with a desired pitch to convert only the pitch into such desired pitch without altering the characteristic frequency region of the inputted voice.

As another technique for pitch conversion, when chorus information is stored, a variation from melody information has been stored, and the pitch of the inputted external audio signal is subjected to pitch-conversion by an amount of the chorus information. More specifically, information which indicates how much the pitch of the inputted external audio signals is to be changed is given as chorus information in the above described method. In such a case, there is no need to detect the pitch of the inputted audio signal, so that the system is simplified. In this case, however, when the inputted external audio signal is not in a correct musical interval of a musical composition, the voice in chorus which is subjected to pitch-conversion based on chorus information also becomes out of the correct musical interval of the musical composition. Moreover, without modification, the sound source 18 cannot perform based on the chorus information described above, and hence in this connection, it is necessary to store such chorus information to be performed by the sound source 18 in the memory unit 12a.

In the case when it is not desired to store the chorus information separately for performance, melody information for pitch and chorus information for pitch are supplied to the pitch converter 22, and a computation of "chorus information-melody information" is performed, whereby pitch-conversion is effected using the result of computation as a variation of the pitch of the inputted external audio signals. In this case, there is no need to detect the pitch of the inputted audio signal besides chorus

information can also be used for performance in the sound source 18 without any modification.

The sound effect device 24 provides a variety of effects such as delaying effect, reverting or distortion effect, panning effect or stereophonic effect to the pitch-converted signals output from the pitch converter 22 and external audio signals by pushing operating buttons (not shown), and such device may have the structure shown in Figs. 2(a) and (b). Pitch-converted signals which have been pitch-converted by the pitch converter 22 are inputted to an input terminal i_1, while external audio signals are inputted to the other input terminal i_2, and the audio output from the effect device 24 is output from the output terminals O_1 and 0_2 as stereophonic signals.

Fig. 2(a) shows an example in which different effects are added by a first sound effect adding system 24a and a second effect adding system 24b which effects such as delaying effect, or reverting or distortion effect to the pitch-converted signals and the external audio signals which were inputted to the input terminals i_1 and i_2, respectively. In this case, the system may be such that different effects are not added by the first sound effect adding system 24a and the second effect adding system 24b, but a setting (applied) state of such effects comes to be different in both the systems.

Moreover, in the case of the structure shown in Fig. 2(a), an image normal position of the output signals from the first effect adding system 24a can be arbitrarily set by controlling a coefficient to be supplied to multipliers K1 and K2. When the coefficient is changed sequentially, the image can be transferred into a sound field space to achieve a panning effect. On the other hand, an image normal

position of the output signals from the second effect adding system 24b can be arbitrarily set by controlling a coefficient to be supplied to multipliers K3 and K4. When the coefficient is changed sequentially, the image can be transferred into a sound field space so that a panning effect can be achieved.

Fig. 2(b) shows an example of a system wherein a stereophonic delaying effect is added as an example in which independent effects are not added to the pitch-converted signals and the audio signals inputted to the input terminals i_1 and i_2. More specifically, the output of a first delay unit 24c is multiplied by a feedback coefficient KF1, the product is inputted to a second delay unit 24d, the output of the second delay unit 24d is multiplied by a feedback coefficient KF2, and the product is inputted to the first delay unit 24c. A multiplier K5 regulates the level of the output signals from the first delay unit 24c, while a multiplier K6 regulates the level of the output signals from the second delay unit 24d, and when the coefficients of the multipliers K6 and K6 are changed sequentially, a more unique effect can be obtained.

Although not shown, the system may be modified such that signals to be inputted to the input terminals i_1 and i_2 are added, and the result is inputted to a common effect adding apparatus.

Other modifications may be made, e.g. the sound effect device 24 can be provided with a means for inputting MIDI signals, whereby such MIDI signals which correspond to mode setting of the operating buttons 16 can be output. When the performance information outputting apparatus 12 is made to be capable of storing a setting state of the effect device 24, it also becomes possible to set the effect device 24 by means of the MIDI signals inputted from the outside. In this case, it is possible

that the effect device 24 is automatically set in cooperation with the operating buttons 16, or that setting of the effect device 24 is changed with the elapse of time in performance. This arrangement is also applicable for the following other embodiments.

A system in which tone color for a karaoke performance is selected by the tone color changing device 12b is described below.

Firstly, when normal mode is selected by operating the operating buttons 16, accompaniment information, melody information, and chorus information are supplied to the sound source 18 by means of the performance information distributor 14, while chorus information and clock timing are supplied to the pitch converter 22.

Then, accompaniment musical sound signals for a karaoke performance are produced in the sound source 18 on the basis of the accompaniment information, melody musical sound signals (guide tone) for a karaoke performance are produced based on the melody information, and chorus musical sound signals (guide tone) are produced on the basis of the chorus information, respectively. Then, these sound signals are output to a sound system to transmit sound.

Since tone color for a karaoke performance has been selected by the tone color changing device 12b, melody musical sound signals (guide tone) and chorus musical sound signals (guide tone) are produced in accordance with the tone color selected by the tone color changing device 12b in the sound source 18 at a low volume which is not so marked in accompaniment sounds for karaoke performance.

On the other hand, the external audio signals derived from the karaoke singing which was inputted from the external audio signal inputting device 20 is pitch-converted in the pitch converter 22 in synchronism with production of the

accompaniment musical sound signals in the sound source 18, these accompaniment musical sound signals being based on the chorus information and the timing clock supplied from the performance information distributor 14, and the thus pitch-converted external audio signals are output to the effect device 24. More specifically, the pitch of the external audio signals is converted into the same pitch as that indicated by the chorus information, and the pitch-converted signals which are obtained by pitch-converting the external audio signals are output to the sound effect device 24.

Then, the sound effect device 24 adds effects to the pitch-converted signals and the external audio signals, and thereafter outputs the resulting signals to a sound system, whereby karaoke singing based on the external audio signals and singing in the chorus part based on the pitch-converted signals is transmitted.

In the system described above, accompaniment sounds for a karaoke performance, guide tones (melody sounds and chorus sounds), karaoke singing and singing in the chorus part are transmitted. Since pitch-conversion for singing in the chorus part is carried out on the basis of performance information, i.e. event information, specifically MIDI signals, the chorus singing is transmitted in synchronism with accompaniment sounds.

Moreover, when melody correction mode is selected on the operating buttons 16, accompaniment information, melody information and chorus information are supplied to the sound source 18, while melody information and clock timing are supplied to the pitch converter 22 by means of the performance information distributor 14. It is to be noted that actions of the sound source 18 in this melody

correction mode are the same as those in the above described normal mode, and accordingly the description thereof is omitted.

In the melody correction mode, pitch-conversion of the external audio signals derived from the karaoke singing inputted from the external audio signal inputting device 20 is carried out in the pitch converter 22 based on the melody information supplied from the performance information distributor 14 in synchronism with production of the accompaniment musical sound signals in the sound source 18, and then the thus pitch-converted signals are output to the effect device 24. In other words, the pitch of the external audio signals is converted into the same pitch as that indicated by melody information, and the pitch-converted signals obtained by pitch-converting the external audio signals are output to the sound effect device 24.

Values of the respective multipliers are fixed such that only the pitch-converted signals are output, but external audio signals are not output, so that only the singing in the melody part corrected on the basis of the pitch-converted signals is heard.

Thus, as described above, the accompaniment sounds for a karaoke performance, guide tones (melody sounds and chorus sounds), karaoke singing and the singing in the melody part are transmitted. In this case, since the pitch-conversion for achieving the singing in the melody part is effected on the basis of performance information (MIDI signals) i.e. event information, melody singing is transmitted in synchronism with accompaniment sounds.

Meanwhile, in the melody correction mode, the melody singing in accurate musical interval is effected by means of the pitch-conversion of external audio signals in the pitch converter 22, and accordingly it becomes possible that even a

so-called tone-deaf person can sing such karaoke singing in accurate musical interval for an audience.

In the case where tone color for BGM is selected by the tone color changing device 12b, accompaniment musical sound signals are produced on the basis of accompaniment information, melody musical sound signals are produced on the basis of melody information, and chorus musical sound signals are produced on the basis of chorus information in the sound source 18. These musical sound signals are output to a sound system to be transmitted. In this case, however, since the tone color for the BGM has been selected by the tone color changing device 12b, when the melody musical sound signals and the chorus musical sound signals are produced in the sound source 18, the sound is produced in a much higher volume than in the case of selecting the tone color for karaoke performance using the tone color changing device 12b.

The effect adding system according to the second embodiment of the invention shown in Fig. 3 differs from the first embodiment shown in Fig. 1 only in the performance information outputting apparatus. Accordingly, a description of the common elements is omitted, such common elernents being identified by the reference numerals used in Fig. 1.

A performance information outputting apparatus 32 in the effect adding system 30 of the second embodiment includes a storage unit 32a, ensemble note information producing device 32b, and a tone color changing device 12b.

Accompaniment information, melody information and chord information are stored in the storage unit 32a. By chord information is meant the information for expressing chord by root sound and types (major, minor, seventh and the like) of the chord.

The melody information and the chord information stored in the storage unit 32a are inputted to the ensemble note information producing device 32b to produce ensemble note information therefrom, and the resulting ensemble note is output as chorus information. Accordingly, the performance information output from the performance information outputting apparatus 32 is composed of accompaniment information, melody information and chorus information the same as in the case of the performance information output from the performance information outputting apparatus 12. Moreover, the performance information outputting apparatus 32 also outputs timing clock signals as in the case of the performance information outputting apparatus 12.

As described above, accompaniment information, melody information and chorus information are output from the performance information outputting apparatus 32, and such information is inputted to a performance information distributor 14, so that the treatment downstream of the performance information outputting apparatus 32 is the same as in the case of the first embodiment.

Laid open Japanese Patent Application No. 2893/1983 and U.S. Patent No. 4,429,606 disclose a method for producing the above described ensemble note information producing device 32b. More specifically, ensemble note tables are prepared corresponding to various chords, one of the ensemble note tables is selected in response to the accompaniment chord performed by a keyboard, and data for forming an ensemble note are read out from the ensemble note table in response to the melody sounds performed by the keyboard, whereby musical sound signals of the ensemble note can be formed on the basis of the data for forming an ensemble note. Hence, in the ensemble note information producing device 32b, it is

sufficient that ensemble note tables have been previously prepared corresponding to the chord information stored in the storage unit 32a, one of the ensemble note tables is selected in response to the chord indicated by the chord information stored in the storage unit 32a, and data for forming an ensemble note are read out from the ensemble note table as ensemble note information in response to the melody information stored in the storage unit 32a.

The third embodiment of the effect adding system shown in Fig. 4 differs from the first embodiment of the invention (Fig. 1) and the second embodiment (Fig. 3) only in the performance information outputting apparatus. Accordingly, common hardware and functions are omitted from the following description.

A performance information outputting apparatus 42 in the sound effect adding system 40 includes a storage unit 42a, an accompaniment information producing device 42b, an ensemble note information producing device 32b and a tone color changing device 12b. Melody information and chord information are stored in the storage unit 42a. By chord information is meant information for expressing chord by root sound and types (major, minor, seventh and the like) of the chord, as in the case of the second embodiment.

The melody information and the chord information stored in the storage unit 42a are inputted to the ensemble note information producing device 32b to produce ensemble note information therefrom, and the resulting ensemble note is output as chorus information, as in the case of the second embodiment. The accompaniment information producing device 42b is a means for inputting chord information to produce accompaniment information therefrom, and outputting the same. Accordingly, the performance information output from the performance information

outputting apparatus 42 is composed of accompaniment information, melody information and chorus information, as in the case of the performance information output from the performance information outputting apparatus 12. Moreover, the performance information outputting apparatus 42 also outputs timing clock signals as in the case of the performance information outputting apparatus 12.

The output from the performance information outputting apparatus 42 includes accompaniment information, melody information and chorus information, and such information is inputted to a performance information distributor 14, so that the treatment downstream of the performance information outputting apparatus 42 is the same as that in the first embodiment.

Laid open Japanese Patent Application No. 51815/1979 and U.S. Patent No. 4,312,257 describe a method for producing the above described accompaniment information producing device 42b. Plural types of automatic arpeggio patterns and automatic base patterns corresponding to types of rhythms such as samba, mambo, ballad and the like are stored in ROM, the automatic arpeggio and automatic base patterns in the types of rhythms selected are read out, and these patterns are changed in response to the root sound of the chord performed by an accompaniment keyboard and types of the chord, whereby automatic arpeggio and automatic base performances corresponding to the chord can be performed. Since the system described above is well known as an automatic accompaniment apparatus, in the accompaniment information producing device 42b, it is sufficient that plural types of automatic arpeggio patterns and automatic base patterns in corresponding to types of rhythms such as samba, mambo, ballad and the like have been stored in ROM, the automatic arpeggio and automatic base patterns in the

types of rhythms selected are read out, and these patterns are changed in correspondence with the root sound of the chord indicated by the chord information stored in the storage unit 42a and types of the chord, whereby automatic arpeggio and automatic base performances corresponding to the chord are effected. Moreover, as an accompaniment pattern, not only one type of automatic arpeggio pattern can be prepared, but also a variety of accompaniment patterns, whereby a suitable pattern can be selected.

In the embodiments of the invention described above, while the pitch converter 22 is not provided with a delay means for adding a prescribed time delay, the invention may be modified such that the pitch converter 22 is provided with a delay means.

Fig. 5 illustrates an example of a pitch converter 22 provided with a delay means. The chorus information (melody information) and the timing clock signals supplied from a performance information outputting apparatus 12 are inputted to a control section 22a, the information and signals inputted are subjected to data-conversion into suitable data in the control part 22a, and the data thus obtained are supplied to a pitch-converting section 22b and a delay section 22c. The control section 22a is provided with a setting device (not shown) for setting a delay time for musical expression such as (1/2) beat, 1 beat, (3/2) beat... and like beats.

More specifically, the chorus information (melody information) and clock timing supplied from the performance information outputting apparatus 12 are inputted to the control section 22a, a delay is set based on the delay time such as (1/2) beat, 1 beat, (3/2) beat and the like beats which has been set in the control section 22a. In other words, delay information such as (1/2) beat, 1 beat, (3/2)

beat...and the like is produced in the control section 22a, and such delay information is supplied to the delay section 22c.

It is to be noted that since the delay section 22c is located at the output end of the pitch-converting section 22b in the pitch converter 22 shown in Fig. 5, only the external audio signals which have been pitch-converted by passing through the pitch-converting section 22b are delayed, while those external audio signals which have not been pitch-converted by passing through the pitch converting section 22b are not delayed.

When a component composed of the external audio signal inputting device 20, the pitch converter 22 and the effect device 24 in the above described embodiments is constructed as shown in Fig. 6 and a delay section 50 for inputting such external audio signals which have not been pitch-converted is added, it is possible to delay the external audio signals which have not yet been pitch-converted.

The control device 22a shown in Fig. 6 is one which can set a delay time in the delay sections 22c and 50 to a value from "0" to a suitable one, while a delay amount based on the timing clock may also be arbitrarily set.

In the case when an inputted voice is intended to delay with respect to only a specified part in a musical composition, a control signal which turns the delay section 22c ON is stored at a position from which a delay starts, while another control signal which turns the delay section 22c OFF is stored at a position at which the delay is to be completed in its performance information, respectively, and when such ON or OFF signal is supplied from the performance information outputting apparatus 12 to the delay section 22c based on the information containing these

control signals, it becomes possible to delay only a prescribed interval of the musical composition to sing a song in a circular canon.

Using the embodiments shown in Figs. 1, 3, 4 and 6, a two-part chorus composed of the external audio signals which have been pitch-converted and the external audio signals which have not been pitch-converted is produced. A three-part chorus is produced when one more line of a pitch-converting section and a delay section as a pitch-converting section 22d and a delay section 22e are added to the pitch converter 22 shown in Fig. 6. It is also possible to produce a four or more part chorus in the manner described above.

In the case where the pitch converter 22 is the one which utilizes a memory as disclosed in the above-mentioned laid open Japanese Patent Application No. 174096/1988, a desired delay time can be given when a desired offset region is provided before the memory region which is used for the pitch-converting treatment without providing a separate delay means.

In the use of such delay means, when one-person singing is delayed by varied periods of time, the effect achieved is that of a plurality of singers performing rather than one person.

A sound volume control means for controlling sound volume is located at the outlet end of the pitch converter 22 (e.g. the outlet end of the delay sections 22c and 22e) and a path for the external audio signals which have not been pitch-converted (the outlet end of the delay section 50 in the case where the delay section 50 has been provided), whereby sound volume can suitably be controlled by the control section 22a. Moreover, in the case where output signals from the sound volume

control means are not required, the level of sound volume may be set to "0" in the sound volume control means.

In the above described embodiments, while sound volume is automatically controlled in a suitable manner in response to the tone color selected in either of the cases of BGM and karaoke performance, a control for sound volume as shown in Fig. 8 may be added. More specifically, Fig. 8 shows a sound volume balance circuit between melody musical sound signals as well as chorus musical sound signals and external audio signals as well as pitch-converted signals.

In the case where melody-chorus musical sound signals (signals obtained by mixing the melody musical sound signals with the chorus musical sound signals output from the sound source 18) are used as a guide tone, adjustment can be more easily carried out where both of the melody-chorus musical sound signals and the external audio pitch converted signals (signals obtained by mixing the external audio signals inputted from the external audio signal inputting device 20 with the pitch-converted signals produced by pitch-converting the external audio signals in the pitch converter 22) change inversely proportional to one another, when an attempt is made to balance both signals.

More specifically, when a balance of sound volume between guide tone and melody singing is established in the case where melody sound is used as the guide tone, more easy setting can be achieved by operating one operating button to change sound volume levels inversely proportional to both of the guide tone and the melody singing than the case where the sound volume levels of the guide tone and the melody singing are separately and independently adjusted.

In Fig. 8, reference character VR designates a volume which varies with a value ranging from "0" to "1" wherein a value of the volume VR is inputted to a multiplier without any modification, but an inverted value of the volume VR is inputted to a multiplier A_2 through an inverter INV, and thus such a value varying from "1" to "0" is inputted to the multiplier A2. Accordingly, when the volume VR is adjusted, the melody chorus musical sound signals vary inversely proportional to the external audio-pitch converted signals, so that easy setting and operating of sound volume balance can be carried out.

In the above described embodiments, while a sound effect adding system which utilizes MIDI has been described, it is, of course, not limited to MIDI specifications, but other specifications may also be utilized.

As to accompaniment sound, reproduction may be effected in accordance with conventional audio information different from the cases of the above described embodiments.

Moreover, the system can be modified so that the performance information stored in a storage unit contains words information of musical composition, and words are indicated on a display device which is separately disposed in response to performance of the musical composition. Moreover, in the word display, the color of the words in a chorus part may be different from words in other parts to let a singer know that the chorus part is to be added to this part.

The sound effect adding system of the present invention includes an input means for inputting audio signals; accompaniment sound producing means for producing accompaniment sounds of a musical composition; storage means for

storing prescribed performance information concerning the musical composition; pitch conversion information outputting means for outputting the pitch conversion information for pitch conversion based on the prescribed performance information stored in the storage means in synchronism with the accompaniment sounds produced by the accompaniment sound producing means; and a pitch-converting means for converting a pitch of the audio signals inputted from the input means in response to the pitch conversion information output from the pitch conversion information outputting means to output audio signals of the converted pitch, the audio signals inputted from the outside through the inputting means by singing the words of a musical composition are pitch-converted by the pitch-converting means so as to correspond to the pitch of the chorus expressed by prescribed performance information of said musical composition, for exarnple, chorus information which expresses the chorus to be added to the melody of said musical composition stored in the storage means based on said chorus information. This pitch-conversion is carried out by outputting pitch-converting information from the pitch conversion information outputting means to the pitch-converting means in synchronism with the accompaniment sounds produced from the accompaniment sound producing means. Accordingly, the audio signals inputted from the inputting means are pitch-converted and output in synchronism with the production of accompaniment sounds of said musical composition by means of the accompaniment sound producing means, so that the output audio has a different pitch from that of the audio signals inputted from the inputting means, whereby the effect is that of a chorus.

Thus, according to the present invention, when one person sings in a karaoke performance, singing having a different pitch from that in the actual singing is

automatically performed, so that the effect is that of a plural person chorus even though a single person is singing.

What is claimed is:

1. A sound effect adding system comprising:

(a) input means for inputting an audio signal expressing a melody of a musical composition;

(b) storage means for storing predescribed performance information concerning said musical composition including at least accompaniment information for producing an accompaniment sound and chorus information independent of said accompaniment information for prescribing pitch of the sound of a chorus to be added to said melody with a pitch different from the pitch of said melody;

(c) readout means for reading said performance information stored in said storage means in prescribed timing;

(d) accompaniment sound producing means for producing said accompaniment sound on the basis of said accompaniment information included in said performance information read out by said readout means;

(e) pitch conversion information outputting means for out-putting pitch conversion information for pitch conversion on the basis of said chorus information included in said performance information read out by said readout means in synchronism with production of said accompaniment sound by said accompaniment sound producing means;

(f) pitch-converting means for converting a pitch of said audio signal expressing said melody inputted from said input means in response to said pitch conversion information outputted from said pitch conversion information outputting means; and

(g) an audio signal outputting means for outputting said audio signal expressing said melody inputted from said input means and said audio signal converted pitch by said pitch-converting means.

2. A sound effect adding system comprising:

(a) input means for inputting an audio signal;

(b) storage means for storing prescribed performance information including at least accompaniment information for producing an accompaniment sound of a musical composition and control information indicating commencement and stoppage of delay of said audio signal in a specified portion of said musical composition;

(c) readout means for reading out said performance information stored in said storage means in prescribed timing;

(d) accompaniment sound producing means for producing said accompaniment sound on the basis of said accompaniment information included in said performance information read out by said readout means;

(e) delay means for controlling commencement and stoppage of delay of said audio signal inputted from said input means on the basis of said control information included in said performance information read out by said readout means in synchronism with production of said accompaniment sound by said accompaniment sound producing means, and delaying said audio signal inputted from said input means, and outputting said audio signal to be delayed.

3. A sound effect adding system comprising:

(a) input means for inputting an audio signal expressing a melody of a musical composition;

(b) storage means for storing prescribed performance information concerning said musical composition including at least accompaniment information for producing an accompaniment sound, chorus information independent of said accompaniment information for prescribing pitch in the sound of a chorus to be added to said melody with a pitch different from the pitch of said melody and control information indicating commencement and stoppage of delay of said audio signal in a specified portion of said musical composition;

(c) readout means for reading out said performance information stored in said storage means in prescribed timing;

(d) accompaniment sound producing means for producing said accompaniment sound on the basis of said accompaniment information included in said performance information read out by said readout means;

(e) pitch conversion information outputting means for outputting pitch conversion information for pitch conversion on the basis of said chorus information included in said performance information read out by said readout means in synchronism with production of said accompaniment sound by said accompaniment sound producing means;

(f) pitch-converting means for converting a pitch of said audio signal expressing said melody inputted from said input means in response to said pitch conversion information outputted from said pitch conversion information outputting means, and outputting said pitch-converted audio signal;

(g) delay means for controlling commencement and stoppage of delay of said connected audio signal outputted from said pitch-converting means on the basis of said control information included in said performance information read out by said readout means in synchronism with production of said accompaniment sound by

said accompaniment sound producing means, delaying said converted audio signal outputted from said pitch-converting means, and outputting said converted audio signal to be delayed.

4. A sound effect adding system as claimed in any one of claims 1, 2 and 3 including:

(a) guide tone producing means for producing a chorus musical sound as a guide tone on the basis of said chorus information included in said performance information read out by said readout means in synchronism with production of said accompaniment sound by said accompaniment sound producing means.

5. An effect adding system as claimed in any one of claims 1, 2 and 3 including:

(a) mode selecting means for selecting any one of a normal mode and a melody correction mode; and

wherein said storage means further stores melodic information expressing said melody as said performance information, said pitch conversion information outputting means outputs said pitch conversion information for pitch conversion on the basis of said chorus information included in said performance information read out by said readout means in synchronism with production of said accompaniment sound by said accompaniment sound producing means in the case when said normal mode is selected through said mode selecting means, and said pitch conversion information outputting means outputs said pitch conversion information for pitch conversion on the basis of said melodic information included in said performance information read out by said readout means in the case when said melody correction mode is selected by said mode selecting means.

6. A sound effect adding system comprising:

(a) input means for inputting an audio signal expressing a melody of a musical composition;

(b) storage means for storing prescribed performance information concerning said musical composition including at least accompaniment information for producing accompaniment sound and melodic information expressing a melody independent of said accompaniment information;

(c) readout means for reading out said performance information stored in said storage means in prescribed timing;

(d) accompaniment sound producing means for producing said accompaniment sound on the basis of said accompaniment information included in said performance information read out by said readout means;

(e) pitch conversion information outputting means for outputting pitch conversion information for pitch conversion on the basis of said melodic information included in said performance information read out by said readout means in synchronism with production of said accompaniment sound by said accompaniment sound producing means;

(f) pitch-converting means for converting a pitch of said audio signal expressing said melody inputted from said input means in response to said pitch conversion information outputted from said pitch conversion information outputting means, and outputting said audio signal of converted pitch; and

(g) guide tone producing means for producing melodic musical sound as a guide tone on the basis of said melodic information included in said performance information read out by said readout means in synchronism with production of said accompaniment sound by said accompaniment sound producing means.

FIG. 1

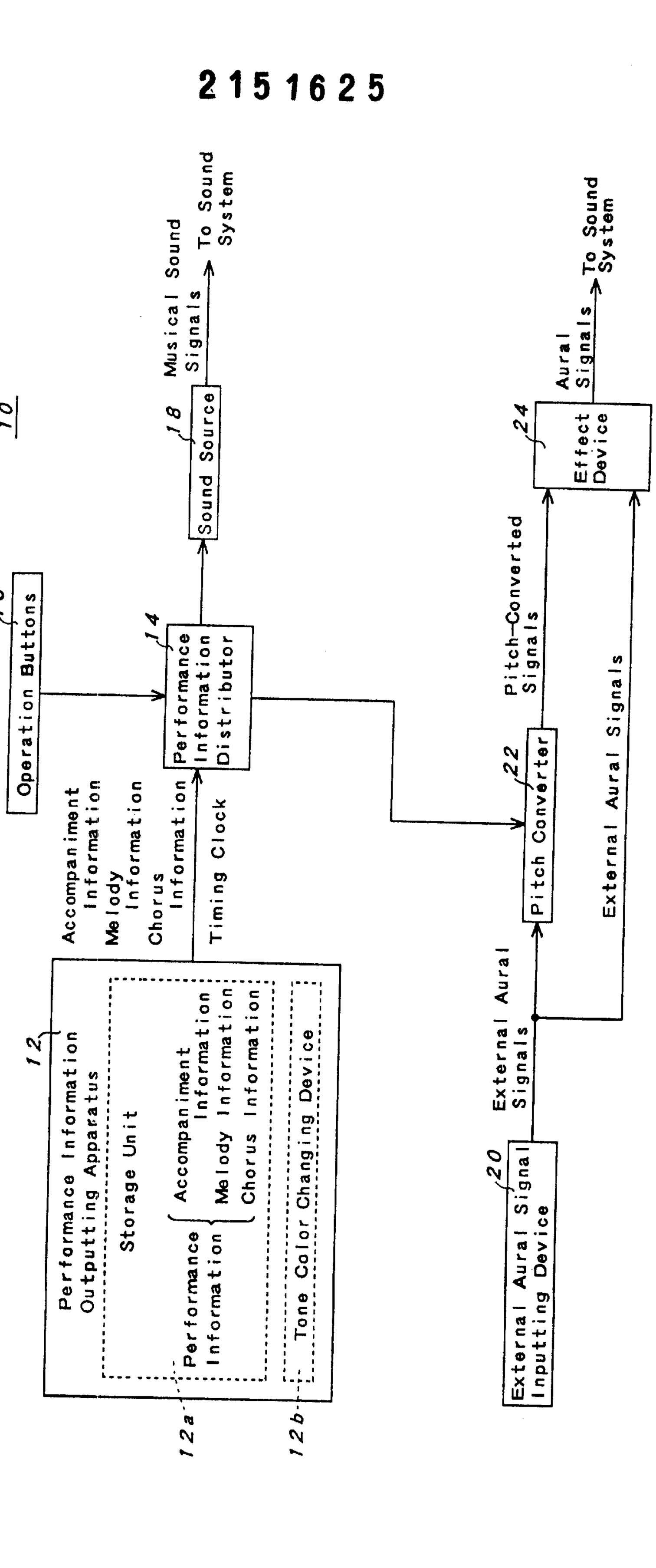
10
Operation Buttons
16
Performance Information Distributor
14
Sound Source
18
To Sound System
Musical Sound Signals
Accompaniment Information
Melody Information
Chorus Information
Timing Clock
Performance Information Outputting Apparatus
Storage Unit
Accompaniment Information
Melody Information
Chorus Information
Performance Information
Tone Color Changing Device
12
12a
12b
Pitch Converter
22
Pitch-Converted Signals
Effect Device
24
Aural Signals
External Aural Signals
Signal Inputting Device
20
External Aural Signals

FIG. 2

(a)

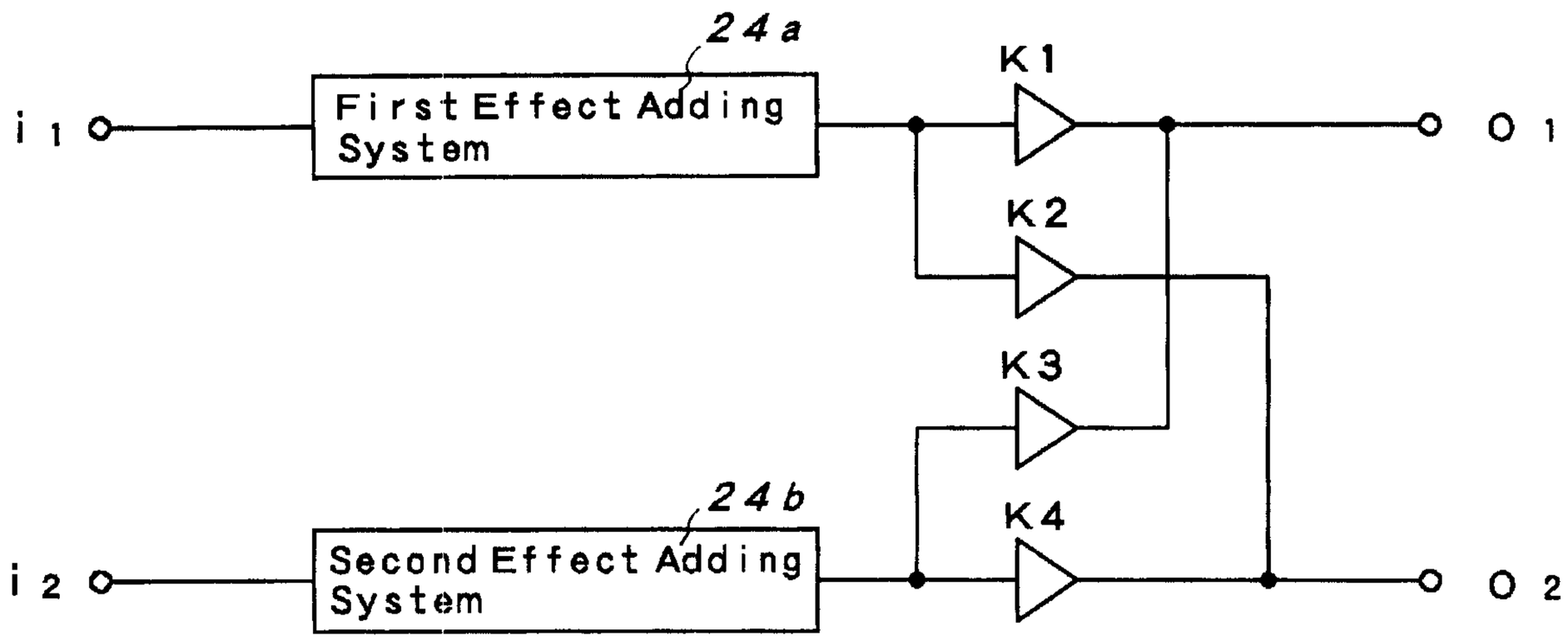

(b)

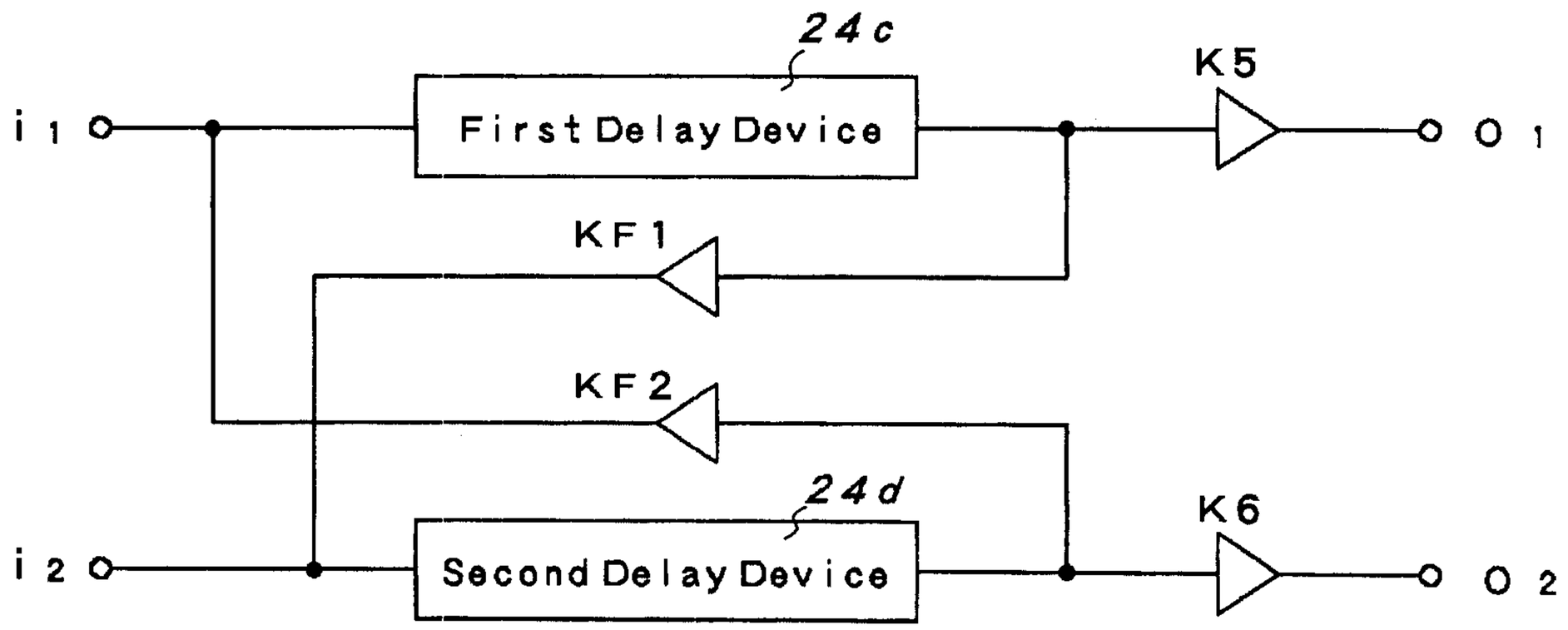

Sealey & MacLean

FIG. 3

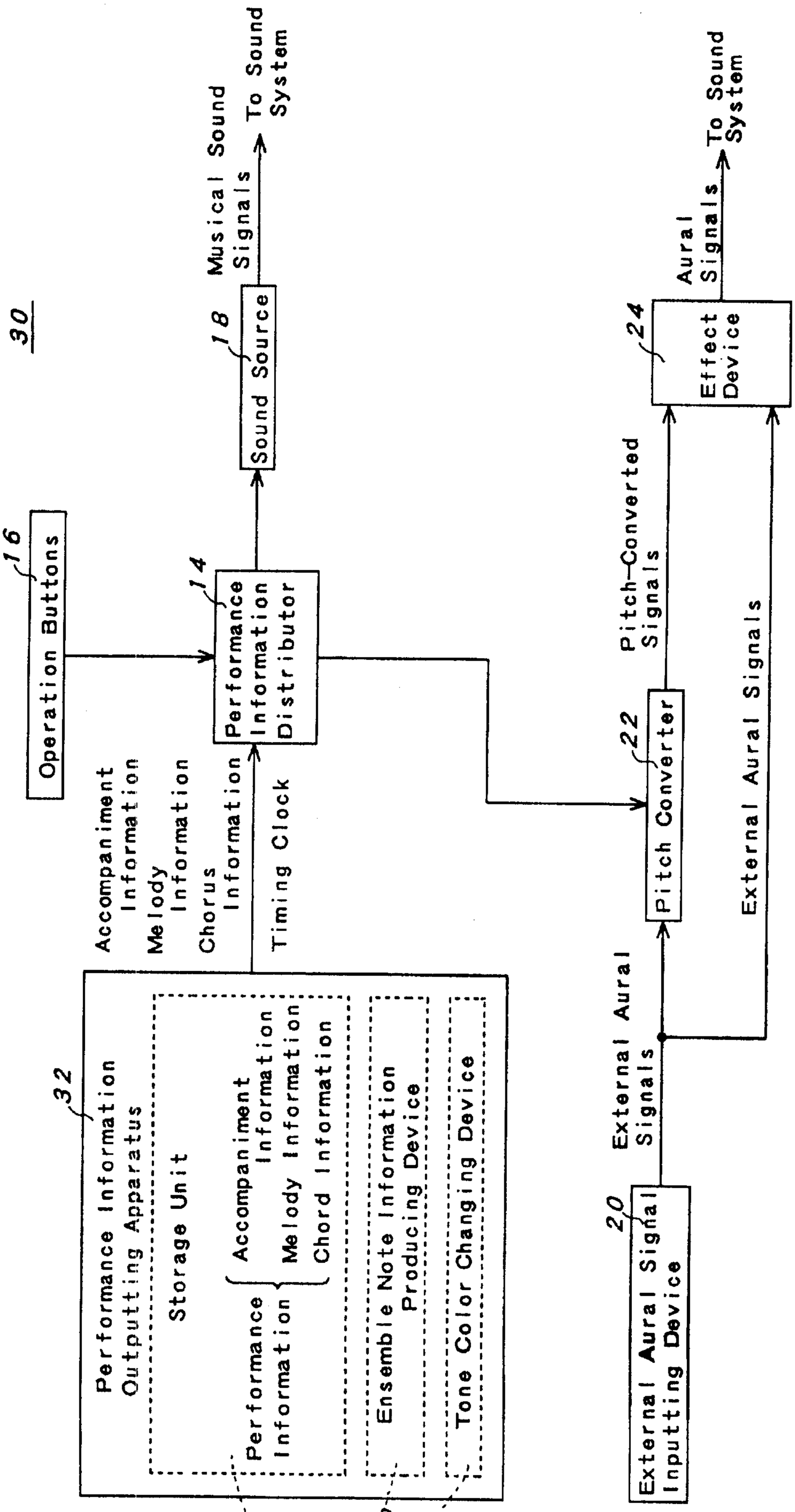
30
16
Operation Buttons
14
Performance Information Distributor
18
Sound Source
Musical Sound Signals
To Sound System
Accompaniment Information
Melody Information
Chorus Information
Timing Clock
32
Performance Information Outputting Apparatus
Storage Unit
Performance Information
Accompaniment Information
Melody Information
Chord Information
Ensemble Note Information Producing Device
Tone Color Changing Device
32a
32b
12b
22
Pitch Converter
Pitch-Converted Signals
24
Effect Device
Aural Signals
External Aural Signals
External Aural Signals
20
External Aural Signal Inputting Device

FIG. 4

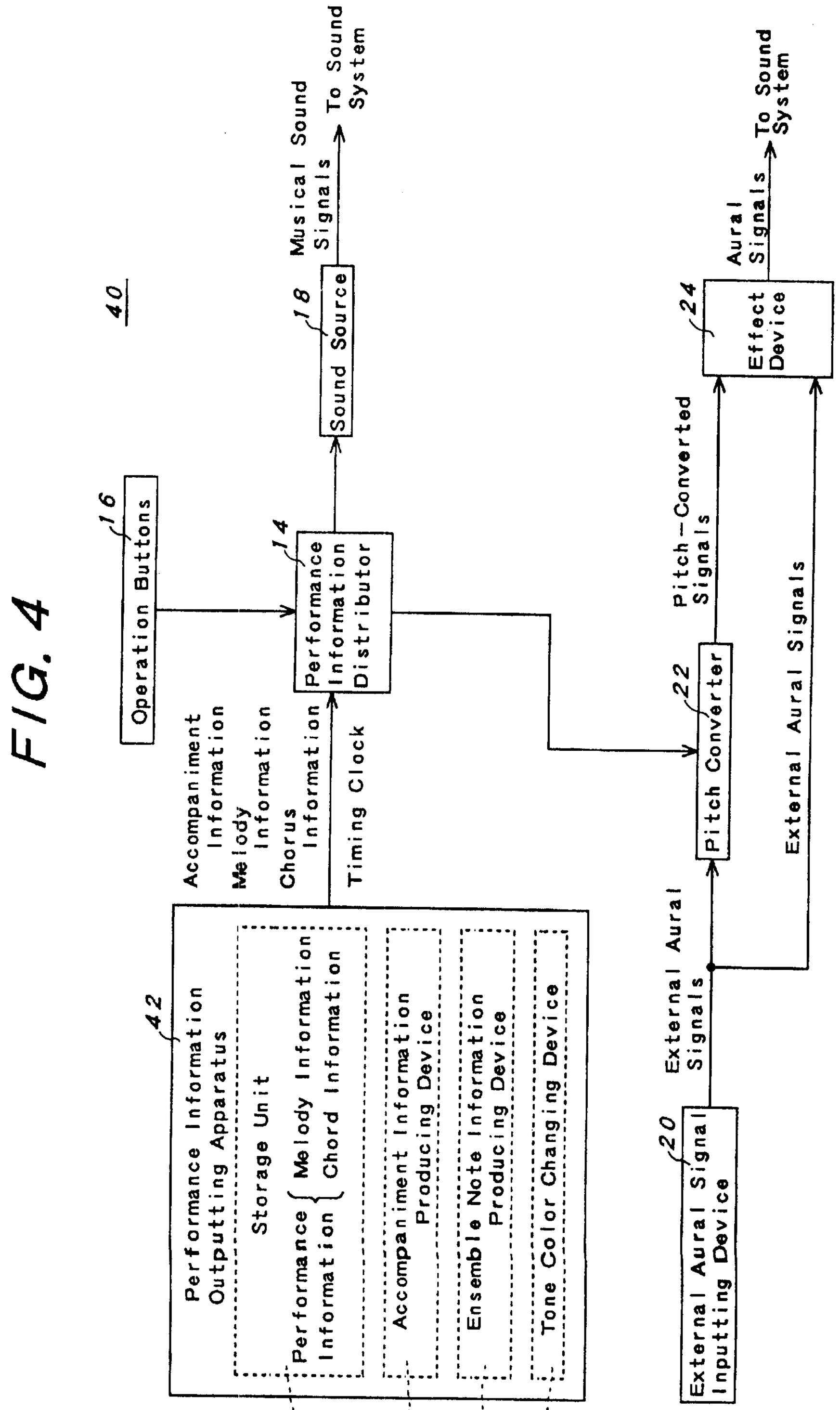
40
16
Operation Buttons
14
Performance Information Distributor
18
Sound Source
Musical Sound Signals
To Sound System
24
Effect Device
Aural Signals
To Sound System
Pitch-Converted Signals
22
Converter
External Aural Signals
Accompaniment Information
Melody Information
Chorus Information
Timing Clock
42
Performance Information Outputting Apparatus
Storage Unit
Performance Information { Melody Information / Chorus Information
Accompaniment Information Producing Device
Ensemble Note Information Producing Device
Tone Color Changing Device
42a
42b
32b
12b
External Aural Signals
Pitch Converter
External Aural Signals
20
External Aural Signal Inputting Device

FIG. 5

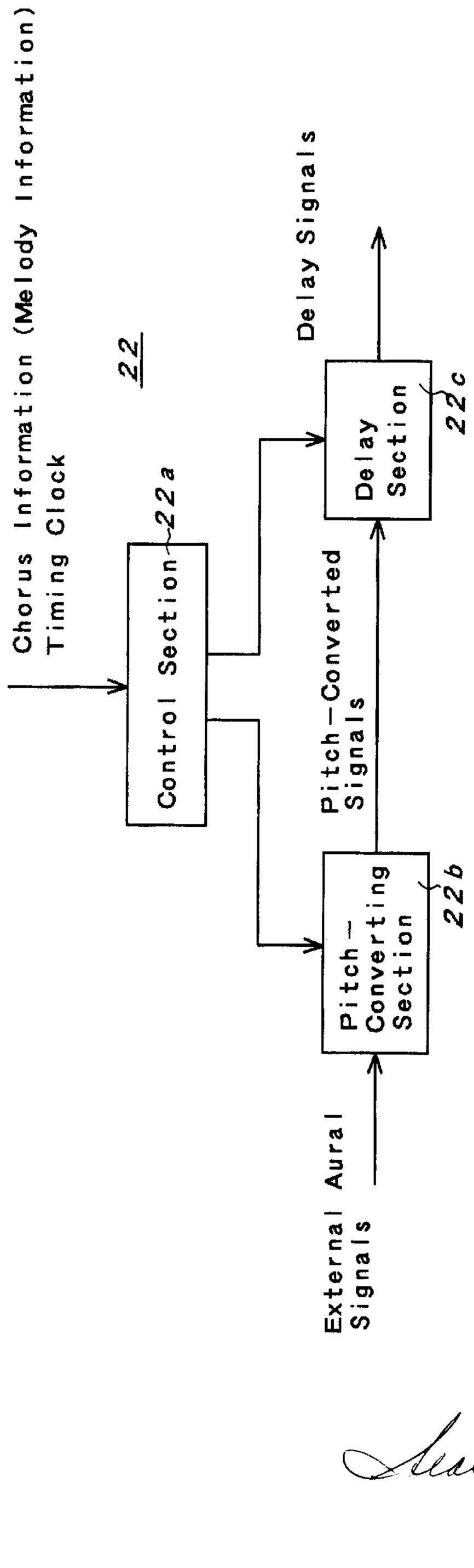
External Aural Signals
Pitch—Converted Signals
Delay Signals
Chorus Information (Melody Information)
Timing Clock
22
22a
22b
22c
Control Section
Pitch—Converting Section
Delay Section

FIG. 6

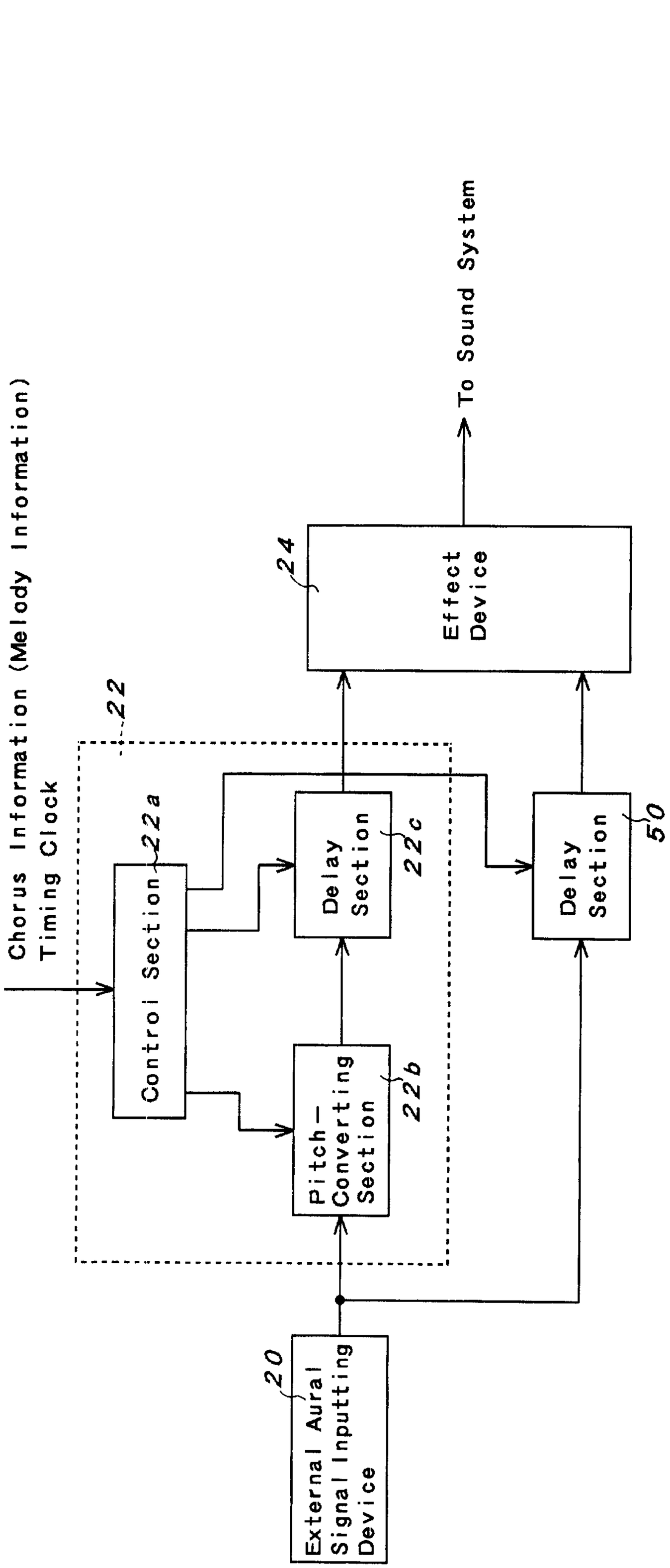

Sealey & MacLean

FIG. 7

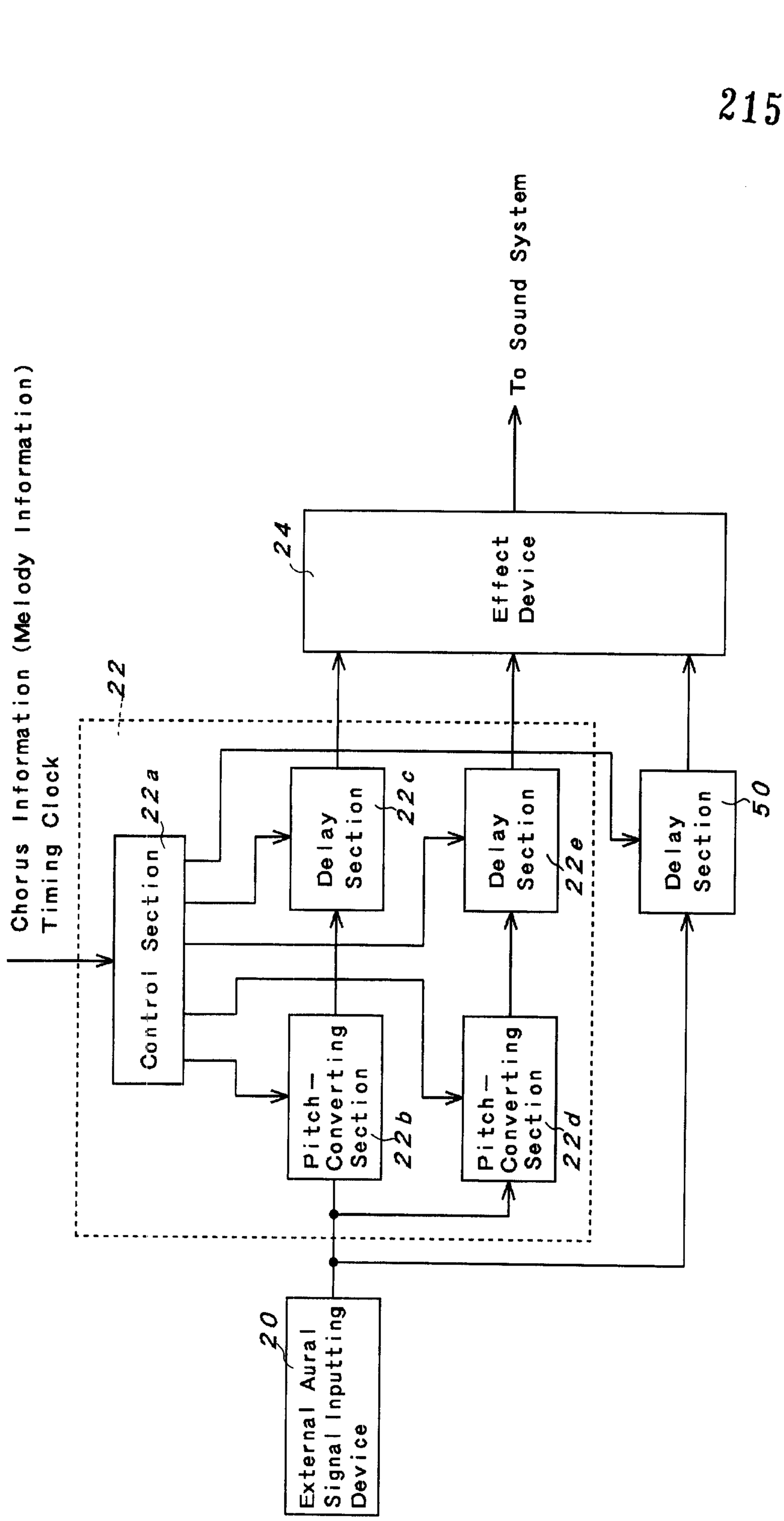

Sealy & MacLean

FIG. 8

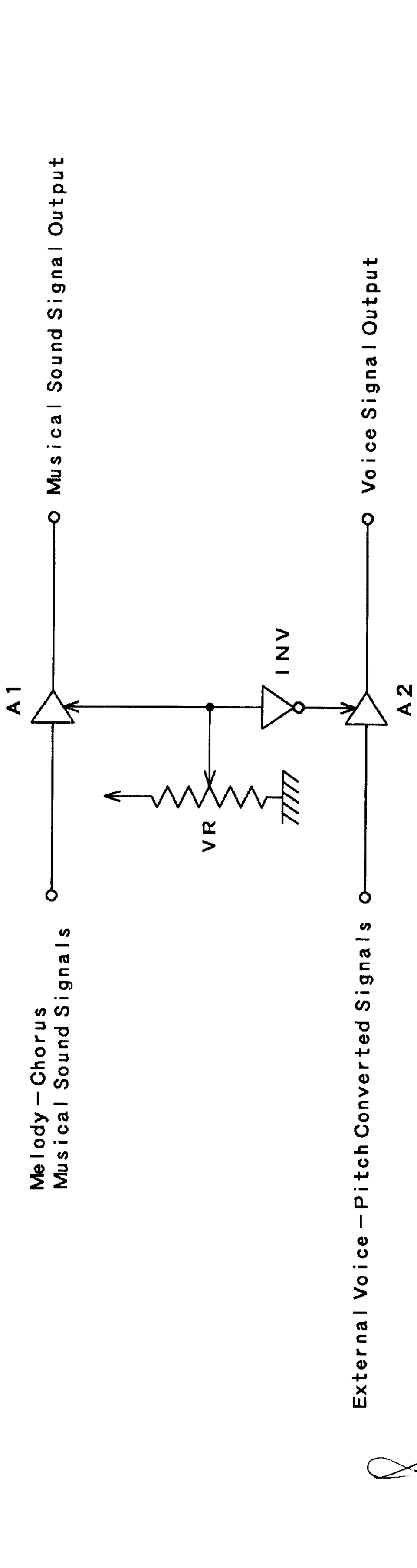

Stanley & MacLean

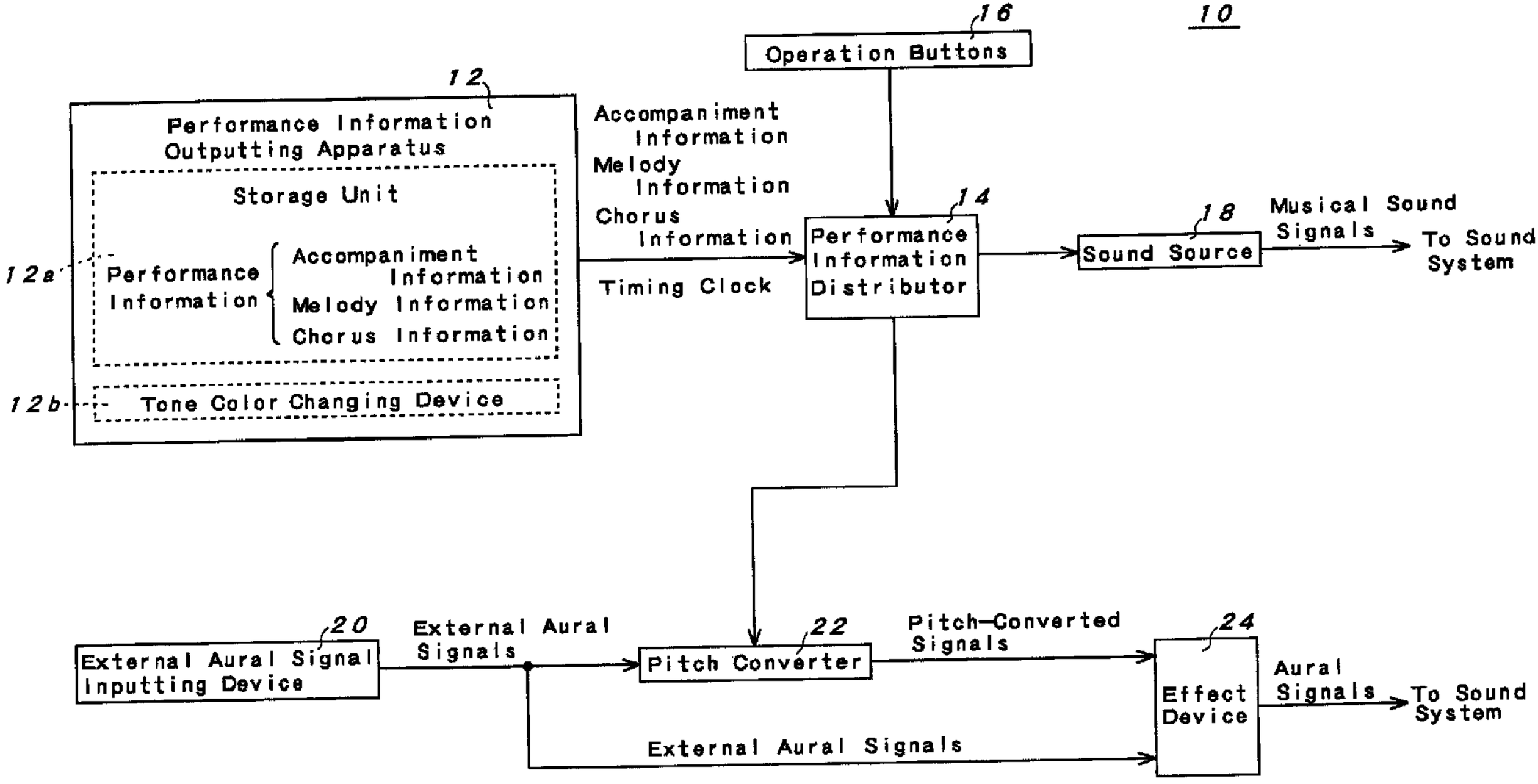
10
16
Operation Buttons
12
Performance Information Outputting Apparatus
Storage Unit
12a
Performance Information
Accompaniment Information
Melody Information
Chorus Information
12b
Tone Color Changing Device
Accompaniment Information
Melody Information
Chorus Information
Timing Clock
14
Performance Information Distributor
18
Sound Source
Musical Sound Signals
To Sound System
20
External Aural Signal Inputting Device
External Aural Signals
22
Pitch Converter
Pitch-Converted Signals
24
Effect Device
Aural Signals
To Sound System
External Aural Signals