July 21, 1931. A. ALSAKER ET AL 1,815,282

SWITCH

Filed Nov. 3, 1927 6 Sheets-Sheet 1

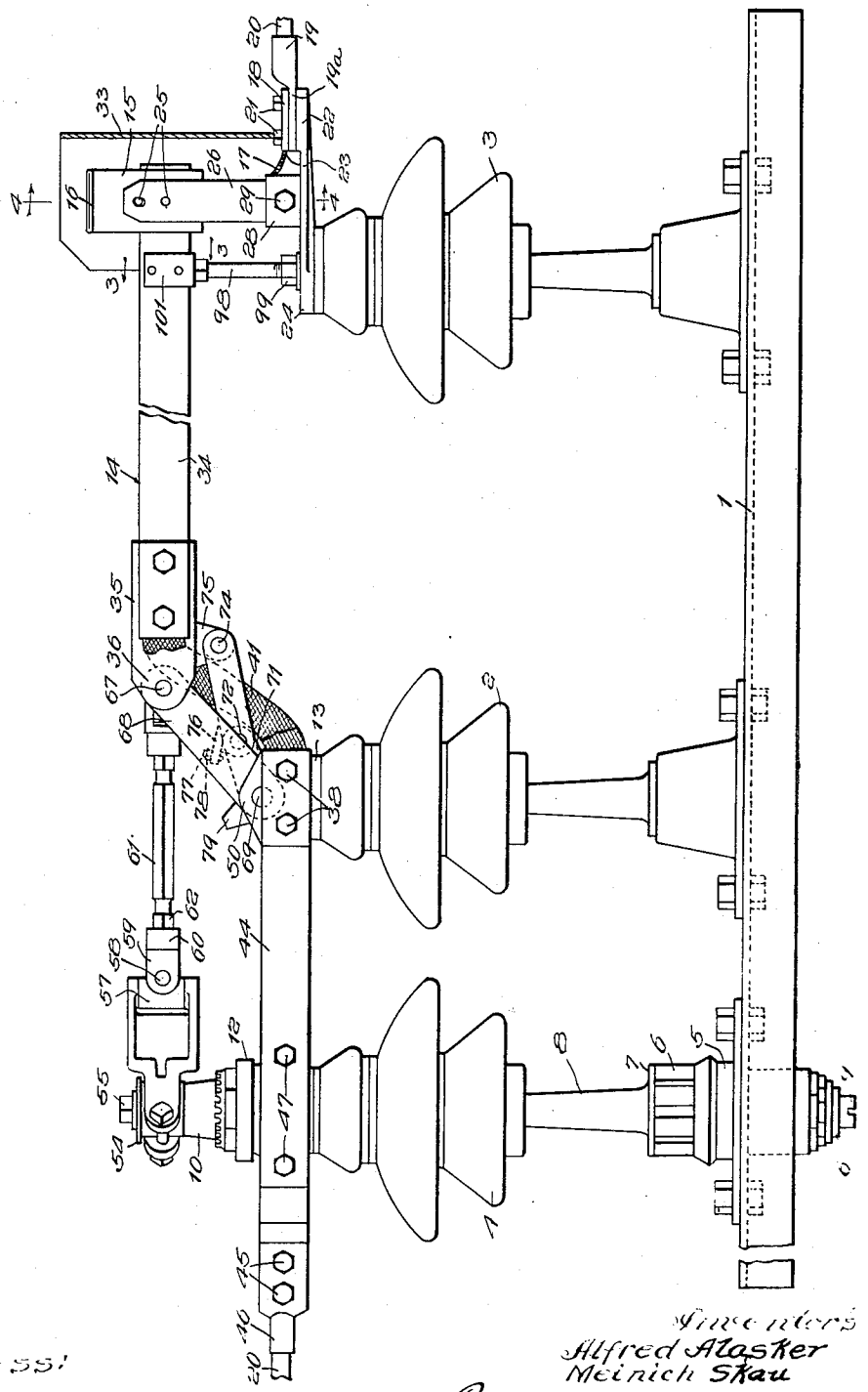

Fig. 1.

Witness:
William A. Riley

Inventors
Alfred Alasker
Meinich Skau
By Brown, Bortleker & Dennis
Attys

July 21, 1931. A. ALSAKER ET AL 1,815,282

SWITCH

Filed Nov. 3, 1927 6 Sheets-Sheet 2

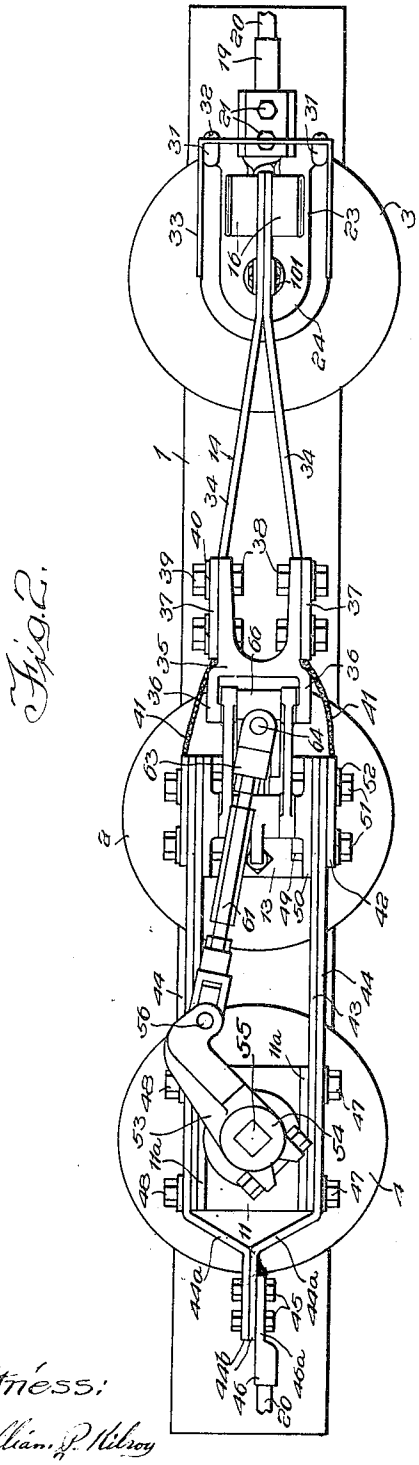

Fig. 2.

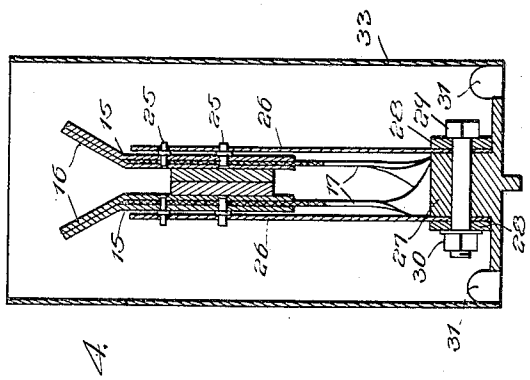

Fig. 4.

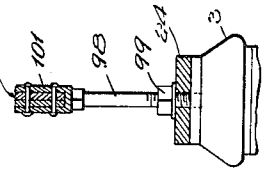

Fig. 3.

Witness:
William L. Nilsoy

Inventors
Alfred Alsaker
Meinich Skau
By Brown Berliner & Dennis
Attys

July 21, 1931. A. ALSAKER ET AL 1,815,282

SWITCH

Filed Nov. 3, 1927 6 Sheets-Sheet 3

Fig. 5.

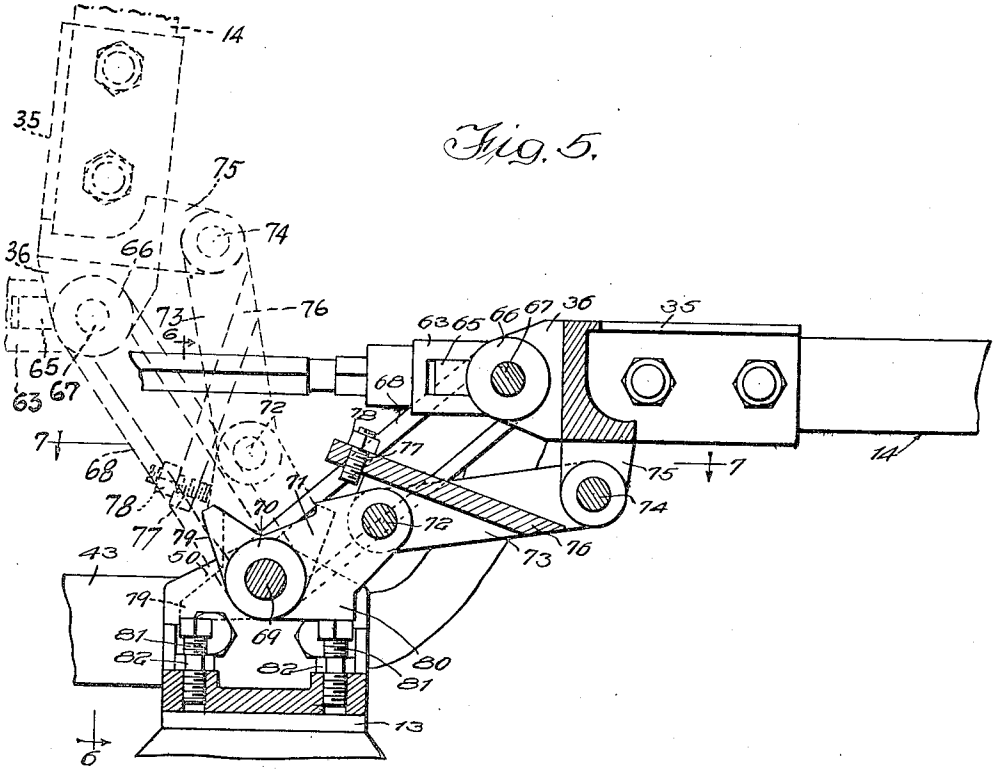

Fig. 6.

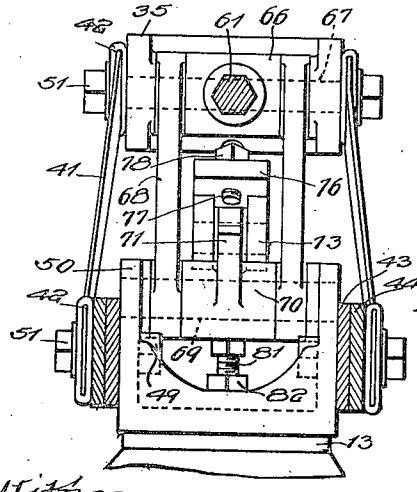

Fig. 7.

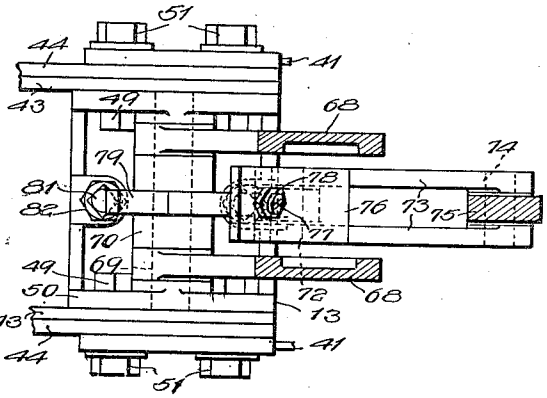

Witness:

William P. Kilroy

Inventors

Alfred Alsaker

Meinich Skau

By Brown Boucher & Dennen

Attys

July 21, 1931. A. ALSAKER ET AL 1,815,282

SWITCH

Filed Nov. 3, 1927 6 Sheets-Sheet 4

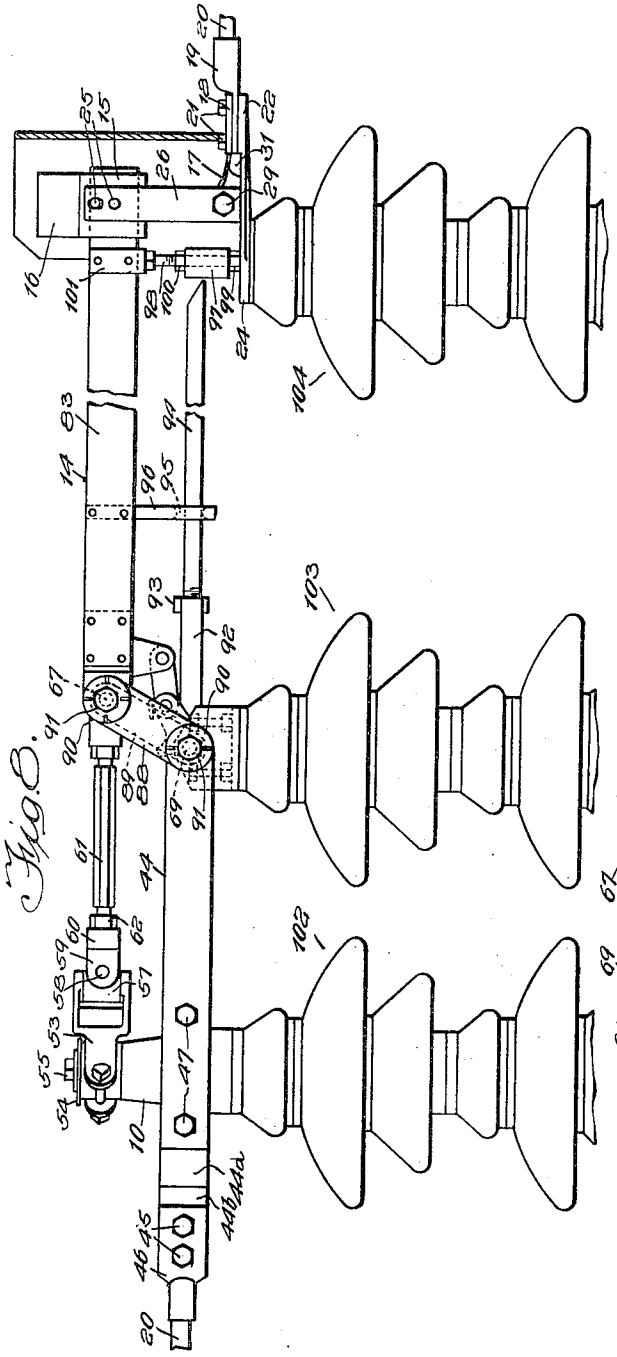

Fig. 3.

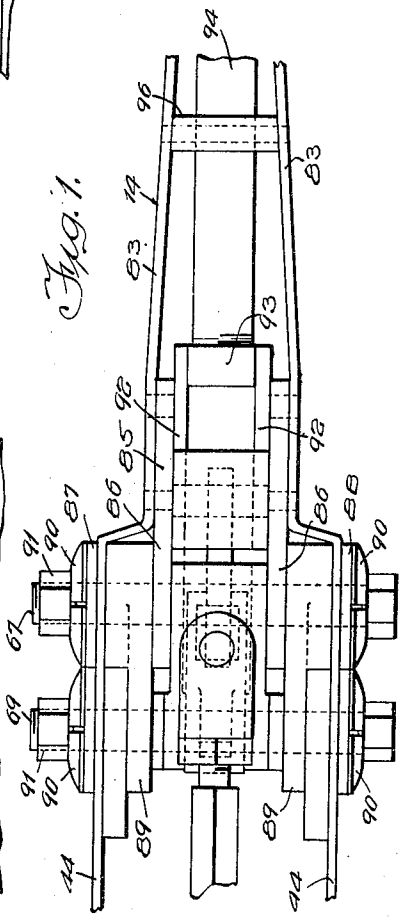

Fig. 1.

Witness:
William R. Kilroy

Inventors
Alfred Alsaker
Meinich Skau

By Brown Bottcher Dunner
Attys

July 21, 1931. A. ALSAKER ET AL 1,815,282

SWITCH

Filed Nov. 3, 1927 6 Sheets-Sheet 5

Fig. 10.

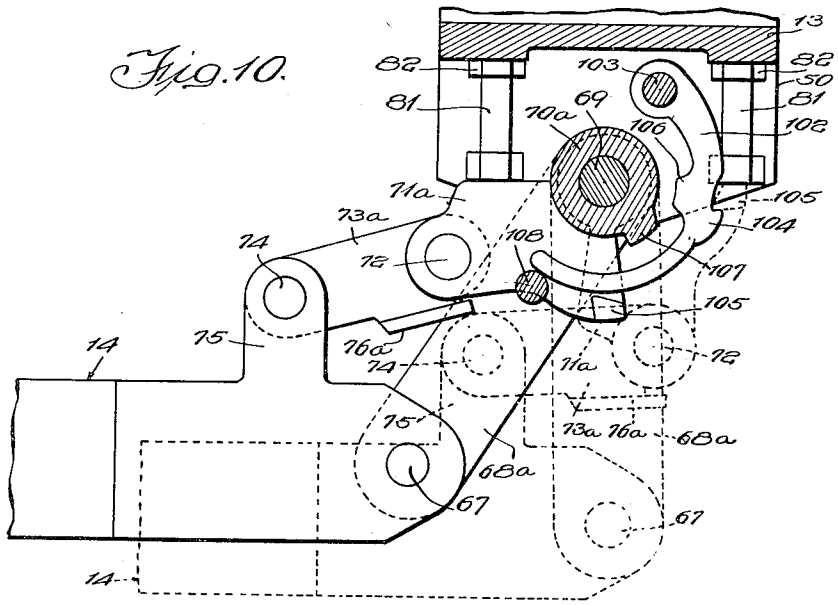

Fig. 11.

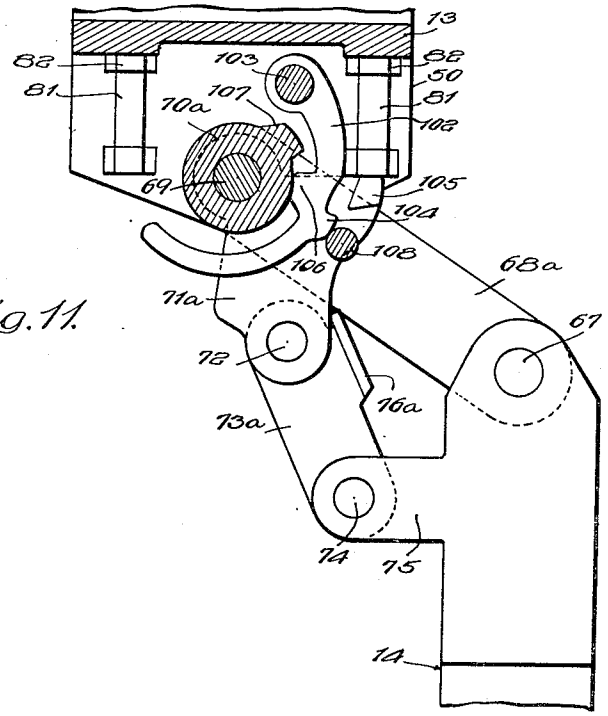

Witness:
William P. Kilroy

Inventors
Alfred Alsaker
Meinich Skau
By Brown Bortner & Dunner
Attys

July 21, 1931. A. ALSAKER ET AL **1,815,282**

SWITCH

Filed Nov. 3, 1927 6 Sheets-Sheet 6

Fig. 12.

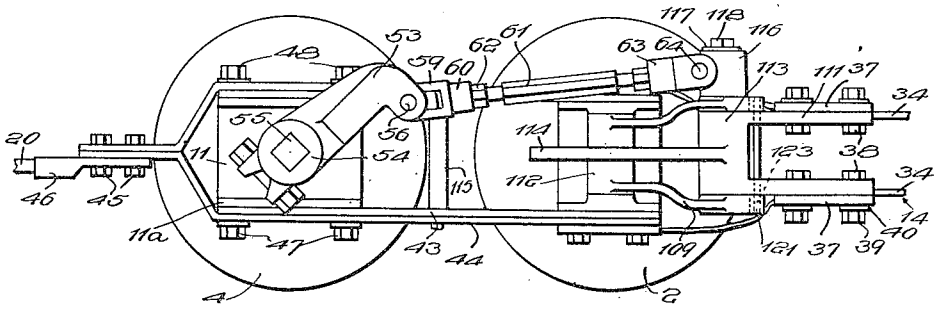

Fig. 13.

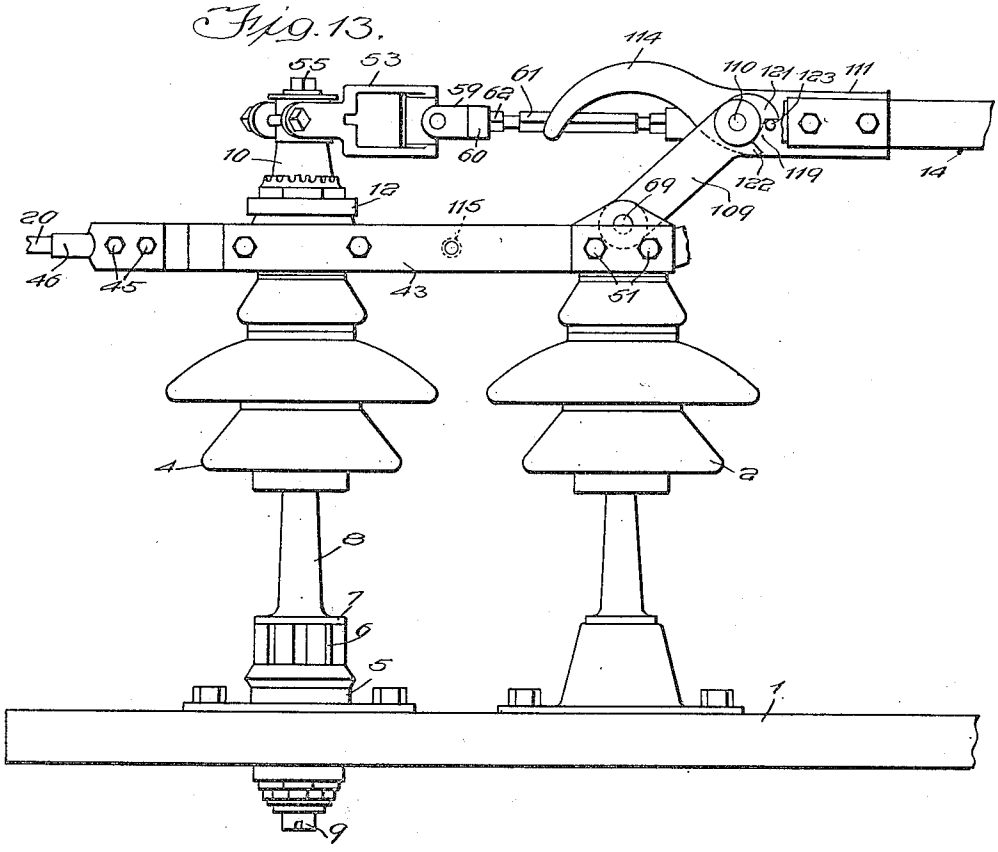

Witness:
William P. Kilroy

Inventors
Alfred Alsaker
Meinich Skau
By Brown Brueser & Brueser
Attys

Patented July 21, 1931

1,815,282

UNITED STATES PATENT OFFICE

ALFRED ALSAKER AND MEINICH SKAU, OF CHICAGO, ILLINOIS, ASSIGNORS TO THE DELTA STAR ELECTRIC COMPANY, OF CHICAGO, ILLINOIS, A CORPORATION OF ILLINOIS

SWITCH

Application filed November 3, 1927. Serial No. 230,759.

This invention relates to disconnect switches of the vertical break type. Such switches, according to present practice, are gang operated and the movable members or blades are of appreciable length to provide a long break or air gap necessitated by the high voltages commonly used.

In switches of this type, as the length of the arm or blade increases, the leverage effect due to friction between the blade and the contact, or freezing, increases so that appreciable power is required to open the blade which, if opened with a single swinging movement is subjected to undesirable strain. We have found that this objection can be overcome by providing means whereby the blade is initially subjected to a rocking movement between the contacts so as to be broken away or freed therefrom, in the opening operation, and is then withdrawn from the contacts and swing into full open position. This greatly facilitates opening of the switch when the blade is frozen to the contacts by sleet or ice, or when the contacts and the blade have become oxidized to such an extent as to produce appreciable friction to oppose relative movement between the blade and the contact.

Switches which are similar, in their broader aspects, to our switch are disclosed in the copending applications of Alfred Alsaker and Eric Nordhem, filed September 27, 1926, and May 27, 1927, and serially numbered 137,925 and 194,608, respectively. In the switch of the first mentioned application, the blade is opened by a combined pull and lifting effect exerted at the pivoted end thereof through the medium of operating links pivoted at their upper ends to the blade and pivoted intermediate their ends to a support, means being provided for exerting a pulling or pushing effect at the lower end of the links for swinging the blade in an arc into open or closed position. There is also a spring connection between the links and the blade for returning the blade to its original relation to the links after the blade has been withdrawn from the jaws or contact. By this arrangement the blade is opened by being first pulled out of the contact with a substantially rectilineal movement, and then swung in an arc into full open position, in which position it is held by the spring connection between the links and the blade. In this form of switch the operating links and associated parts are subjected to considerable stresses and there is no positive connection between the support and the blade for holding the blade open.

In the switch of the second application above identified, the pivoted end of the blade is connected to the support by links pivoted at their upper ends to the blade and at their lower ends to the support. The blade has an upwardly projecting member and suitable operating means is connected to this member above the blade for exerting a pulling or pushing effect thereon for opening or closing the blade. The blade is opened and closed by a combined swinging and plunging movement, and the links carry a locking member which co-operates with locking means on the support and actuated by the operating means for locking the blade in open position. In this form of switch the blade is subjected to considerable stress when opening it, particularly when the blade is of great length as in high tension switches, due to the application of the opening pull to the blade above and adjacent the pivoted end thereof, and considerable attention and care is required in the machining, adjustment and timing of the locking means.

Our switch is distinguished from the switches above discussed in the manner of operating the blade and securing it in open position. In addition to the main operating links we provide a second linkage connection between the blade and the support which forms a positive connection therebetween and serves to lock the blade in open position. This linkage connection is in the nature of a toggle and after the contacts are separated exerts a lifting effect on the blade at a point in advance of the pivotal connection thereof to the main operating links, causing the blade to swing about such connection in its continued opening movement into full open position, in which position the blade is disposed substantially vertically. The toggle is bro-

ken in proper direction to lock the blade to the support, in conjunction with the main links, as it reaches full open position thus locking the blade open. This causes the blade to swing as a unit with the operating links and the toggle during closing so that it is closed with a single swinging movement, the toggle being broken in proper direction to release the blade from the support as it reaches full closed position. A further distinguishing feature of our switch is that the pull exerted in opening the blade is applied directly to the blade and in the plane thereof, avoiding subjecting the blades and links and associated parts to undue stresses.

Our switch includes means whereby the blade is caused to be swung vertically into full open position after being first broken free of the contacts and withdrawn therefrom, this swinging movement of the blade occurring in the plane of the corresponding phase conductor, thus preventing likelihood of interference between phases, as in a three phase system, by opening or closing of the switch blade.

While the switch illustrated is intended more particularly as a high tension disconnect switch, it is also adapted for other uses such as, in example, in a low tension high ampere switch where large areas of contact are involved with consequent resistance to movement of the blade out of the contacts. By our invention, we provide means whereby the end of the blade remote from the contact is raised slightly at the initiation of opening movement of the blade, thus exerting a powerful leverage effect at the contact end of the blade which serves to very effectively break the blade free of the contact, so that it may be readily withdrawn therefrom. It is also possible, by providing suitable arcing horns and increasing the length of the blade, to use this switch as a load break switch. We also contemplate applying our invention to an underhung switch in a novel manner whereby any undesirable strain, due to dropping of the switch blade after withdrawal of the same from the contact, is avoided. It will be understood, therefore, that our switch is not necessarily limited to any one particular use and our invention can be applied to switches of various types, the types herein shown being merely illustrative of the practical application of our invention. Further objects and advantages of our invention will appear from the detailed description.

In the drawings:

Fig. 1 is a side view of a switch constructed in accordance with our invention;

Fig. 2 is a plan view;

Fig. 3 is a section taken substantially on line 3—3 of Figure 1;

Fig. 4 is a section taken substantially on line 4—4 of Figure 1;

Fig. 5 is a section through the blade supporting member and the adjacent end portion of the blade, parts being shown in elevation;

Fig. 6 is a section taken substantially on line 6—6 of Figure 5;

Fig. 7 is a section taken substantially on line 7—7 of Figure 5;

Fig. 8 is a side view of a modified form of switch;

Fig. 9 is a plan of the switch blade and associated parts illustrated in Figure 8;

Fig. 10 is a side view, partly in section, of a blade mounting for an underhung type of switch, showing the blade in closed position, the position of the blade and associated parts immediately prior to the blade leaving the contact being indicated by dotted line;

Fig. 11 is a view similar to Figure 10 showing the position of the blade and associated parts when the blade is in full open position;

Fig. 12 is a plan view of a third modified form of switch;

Fig. 13 is a side view of the form of switch illustrated in Figure 12.

Our switch is somewhat similar, in its broader aspects, to the switch disclosed in the co-pending application of Alfred Alsaker and Eric Nordhem, Serial No. 194,608 filed May 27, 1927, but is distinguished therefrom in that no springs are employed for connecting the blade to the operating means therefor and by the linkage means for locking the blade to the main operating links for movement therewith after it has been opened to a pre-determined extent and during the closing movement of the blade. The switch structure is mounted on a base 1 of channel construction. Two fixed insulators 2 and 3 of known type are rigidly secured on the base 1 in spaced relation, insulator 2 supporting the switch blade and associated parts and insulator 3 supporting the fixed contact and associated parts. A third insulator 4 is mounted on base 1 in spaced relation to insulator 2, this third insulator being also of known construction and mounted for oscillatory movement about a vertical axis in any suitable or known manner, such as that illustrated in the application of Alfred Alsaker for Rotary insulator, Serial No. 137,926 filed September 27, 1926. At its lower portion the insulator 4 is mounted for turning movement through a suitable anti-friction or ball bearing structure 5, above which is provided a member 6 which is pinned or otherwise suitably secured to a flange 7 at the lower end of neck or stem 8 of the insulator. This neck or stem is held against end-wise movement by a through pin 9 secured therein and extending through the member 6 and bearing structure, provided adjacent its lower end with suitable collars or equivalent elements threaded or otherwise adjustably secured on the lower portion of stem 6 whereby the ball bearings may be adjusted to avoid undesira-

ble looseness or play and insure ease of operation of the oscillatory insulator. An operating member 10 is secured on the upper end of the insulator 4 in a known manner and is pinned or otherwise secured thereto for turning movement with the insulator. This operating member extends through a supporting and connecting member 11 which is substantially square in outline, a ball bearing structure 12 of suitable type being interposed between the member 11 and the operating member 10, so as to insure ease of turning of the latter. The member 6 is adapted to receive on its upper portion, above the ball bearing structure 5, an operating arm (not shown) which may be secured thereto in any suitable or well known manner. In practice, in three phase work, the arms of the three movable insulators of the three switches are connected to be operated in gang in a known manner.

A substantially square blade supporting member 13 is secured on the top of insulator 2 and provides a support for a blade 14 through suitable linkage connection. This blade co-operates with contact jaws 15 (Fig. 4) provided at their upper ends with downwardly converging lips or guide elements 16 for directing the blade between the jaws. These jaws may be of any suitable construction, but we prefer to employ jaws constructed in the manner disclosed in the co-pending application of Alfred Alsaker for Self cleaning contacts, Serial No. 224,069, filed October 5, 1927. As fully set forth in said co-pending application, each of the jaws is formed from a suitable length of copper tubing which is flattened under pressure on the end portions of flexible lead 17 formed from braided copper. The other ends of these leads are secured in a terminal member 18 which is also formed from a suitable length of copper tubing, flattened under pressure upon the ends of the leads. This terminal member 18 is disposed upon the flattened portion 19*a* of a terminal lug 19, secured upon one end of a wire or conductor 20. Tap screws 21 pass through the terminal member 18 and element 19*a* and thread into a thickened portion 22 of an arm 23, which extends from a cap member 24 secured on the upper end of insulator 3. Each of the jaws is provided with two outwardly projecting studs 25 which extend through openings adjacent the upper ends of supporting leaf springs 26. The lower one of these openings receives its co-operating stud snugly, the upper opening being appreciably larger than its co-operating stud, permitting a certain amount of desirable looseness of the jaws in order that they may properly align themselves so as to obtain maximum contact with the end portion of blade 14. The springs 26 are secured, at their lower ends, between a block 26*a* which projects from the upper face of arm 23, and clamping plate 28, securing bolts 29 being passed through the plates and blocks and the plates being drawn tight against the lower portions of the springs by nuts 30 threaded onto the bolts. Preferably, the plate 23 is provided, adjacent its outer end, with suitable lugs 31 which are bored and threaded for reception of screws 32 by means of which a suitable housing 33 is secured to the plate or arm 23 in position to extend about the contact jaws and associated parts, it being noted, however, that this housing is open at its inner or front side and at its top.

The blade structure includes two blade elements 34. The outer ends of these elements 34 seat in recesses formed in the outer faces of the arms of a U-shaped blade carrying frame or bracket 35, each arm of which is provided with a rearwardly projecting ear 36.

Terminal members 37 are disposed at the outer or side faces of the blade elements 34 and are forced into close contact therewith by screws 38 passing through the arms of the bracket 35 and through the elements 34 and terminal members 37, nuts 39 being threaded onto these screws and bearing against spring washers 40 confined between the nuts and the terminal members. This provides simple and efficient means for securing the blade to the frame 35 and also insures proper contact between the terminal elements 37 and the elements of the blade. Each of the terminal elements 37 is formed from a suitable length of copper tubing which is flattened upon one end of a flexible lead 41 formed from flat copper braid. A similar terminal element 42 is flattened upon the other end of each of the leads.

The members 11 and 13 are connected by spacing strips 43 formed from pieces of galvanized steel of suitable gauge. Copper contact strips 44 extend along the outer faces of the spacing strips 43 and have their outer ends bent inwardly toward each other as at 44*a* and then outwardly into parallelism to form attaching elements 44*b* which are provided with aligned openings for reception of securing screws 45 which pass through the flattened portion 46*a* of a terminal lug 46, in which is secured the end of the wire or conductor 20 in which the switch is interposed. Securing screws 47 extend through the strips 43 and 44 and through the member 11 transversely thereof, this member being provided with lateral flanges 11*a* to obtain contact with the strips 43 throughout the width thereof. Nuts 48 are threaded onto the bolts 47 and co-operate with spring washers disposed between the heads of the bolts and the nuts, and the contact strips or terminal bars, to insure proper contact between the strips, the spacing strips 43 serving to maintain the members 11 and 13 in proper relation. Secur-

ing screws 49 pass through lateral flanges 15 of the supporting member 13 and through the inner or forward end portions of the strips 43 and 44. The screws 49 also pass through the terminal elements 42 of the leads 41 and receive nuts 51 threaded thereon and bearing against spring washers 52 confined between the nuts and the terminal strips 44. The spacing strips and the terminal strips are thus tightly secured to the supporting member 13 and proper electrical contact between the terminal elements 42 and the strips 44 is secured. This completes the electrical connection between the cable or conductor 20 and the blade 14 of the switch structure.

An operating arm 53 of suitable shape is provided at its outer end with a split collar by means of which it is adjustably clamped about the operating member 10. A disc 54 is secured upon the upper end of member 10 by a screw 55 and serves to eliminate possibility of the arm becoming detached from this member. The forward or inner end of arm 53 is angularly disposed and is pivotally connected at 56 on a vertical axis to a block 57 which is pivotally connected at 58 on a horizontal axis to a clevis 59. This provides a universal connection between the clevis and the arm. The clevis is provided at its forward portion with a collar 60, which is threaded for reception of the threaded end portion of an operating rod 61, which is held in adjustment in the clevis by a jam nut 62. The inner or forward end of rod 61 is similarly secured to a clevis 63, which is pivoted on a vertical axis at 64 to a lug 65 extending from a sleeve 66, which is mounted for turning movement on a pin 67 secured through the rearwardly extending ears 36 of the arms of frame 35. The arm is thus connected to the outer end of the blade for urging the same in opening and closing direction, in accordance with turning of the insulator 4. When the insulator is turned in a counter clockwise direction, as considered in Fig. 2, the operating rod 61 exerts a pull on the outer end of the blade in a direction away from the fixed contact consisting of the jaws 15, so as to withdraw the blade from such contact. At the initiation of this opening movement of the blade, the blade is subjected to a toggle effect, which exerts a powerful leverage at the contact end of the blade so as to break it free of the jaws and permit it to be withdrawn therefrom, as will be explained.

The pin 67 passes through the upper ends of a pair of main operating links 68, the lower ends of which are rockably mounted on a pin 69, which is secured through the flanges 50 of supporting member 13 centrally thereof. At their upper ends, the links 68 are confined between the ends of sleeve 66 and ears 36 of the blade brackets 35. The lower ends of the links are confined between the end of a sleeve 70 loose on the pin 69 and the flanges 50 of the supporting member 13. A link 71 extends from sleeve 70 and is pivotally secured by a pin 72 to the outer end of a link 73, the upper inner end of which is pivotally secured by a pin 74 to a lug 75 depending from the blade carrying brackets 35. The link 73 straddles the link 71 and the lug 75, the side elements of this link being connected by a web element 76 which projects rearwardly beyond pin 72. A set screw 77 is threaded through the rearwardly projecting portion of the web 76 and is secured in adjustment by a jam nut 78. This set screw limits relative movement between the links 71 and 73 as the blade approaches full open position. The sleeve 70 is further provided with stop elements 79 and 80 disposed to contact with cap screws 81 having threaded engagement with the support 13, these screws being secured in adjustment by jam nuts 82. The stop elements cooperate with the screws to limit turning movement of sleeve 70 about pin 69 during opening and closing of the switch blade.

When the switch blade is in full closed position the links occupy the positions illustrated in Figs. 1, 2 and 5. To open the switch blade, the insulator 4 is turned in a counter clockwise direction as considered in Fig. 2. This exerts a pull on the blade endwise thereof away from the fixed contact through the pin 67 and operating rod 61 and associated parts. As a result of this pull at the upper end of the links 68, the main operating links are rocked about the pin 69. At the initiation of this movement, the end of the blade remote from the fixed contact, which has been termed the outer end for convenience of description, is raised since the links 68 move about pin 69 so as to move the pin 67 backward and forward. It is to be noted that the link 68 and the blade constitute a toggle, the pin 67 being at the joint of this toggle and the inner or contact end portion of the blade being retained by friction between the jaws of the contacts. As a result of this construction, the blade acts as a lever to exert a powerful leverage effect at the contact of the blade so as to break it free from the contact jaws at the initiation of the opening movement of the blade. After the blade has thus been broken free from the jaws, it can be readily withdrawn therefrom and swung into full open position. This leverage effect exerted by the blade at the contact is of great assistance in opening the blade in cases where the contact jaws at the blade are coated with sleet or ice so as to be frozen together, or in cases where the jaws and the blade are oxidized or are of such area as to present appreciable frictional resistance to opening of the blades. Continued pull on the pin 67 results in swinging the blade upwardly through an arc into full open position, due to the combined action of the links 68 and the links 71 and 73. It is to be noted that the links 71 and 73 also

constitute a toggle. During the first part of the opening movement of the blade, after it has been broken free from the fixed contact in the manner described, which movement is substantially rectilinear, link 71 is turned about the pin 69 in a counter clockwise direction as considered in Fig. 5 due to the connection of the inner end of link 73 to lug 75. This movement of the link 71 continues until the element 79 contacts with the co-operating screw 81, which serves to positively limit movement of link 71. Continued pull on pin 67 then causes the blade to be swung upwardly in an arc into full open position, since the pivot pin 72 is held against further outward movement. The set screw 77 is so adjusted that, as the blade reaches full open position, the upper end of link 73, which is connected to the pin 74, passes rearwardly beyond aligned or dead center position, so that the toggle formed by the links 71 and 73 is broken and the line of pressure exerted by the weight of the blade and associated parts passes inside of the axis of pin 69, the extent to which the toggle is broken being limited by contact of the screw 77 with link 71, as will be clear from Fig. 5 in which the relative positions of the parts when the blade is in full open position is indicated in dotted line. Since the pin 67 is held against forward movement by the operating rod 61 and associated parts, the blade is thus effectively locked in open position. To close the blade, the insulator 4 is turned in clockwise direction as considered in Fig. 2, subjecting the pin 67 to a push effect, which urges the blade inwardly or toward the contact. Since the toggle formed by the links 71 and 73 is locked, the blade moves with the linkage structure as a unit and swings inwardly about the pin 69 into closed position, entering between the contact jaws by a swinging movement. It will thus be seen that the movement of the blade when being closed is different from its movement when being opened in that in opening the blade, it is first subjected to a rocking movement to break it free from the contact and is then moved through an appreciable distance by a substantially rectilineal movement, so as to withdraw it from the contact, after which the blade is swung upwardly into open position. In closing the blade, on the contrary, it is moved from full open position into full closed position by a single arcuate swinging movement, which is very effective. As the blade approaches full closed position, element 80 of sleeve 70 contacts with the head of the inner cap screw 80 stopping movement of link 71 about pin 69 and acting, in the slight continued movement of the blade into full closed position, to break the toggle upwardly and outwardly and to raise the set screw 77 out of contact with the link 71 into the position illustrated in Figure 5. This serves to return all parts of the linkage system to their original relative positions, so that the blade can be readily moved into open position in the manner previously described.

In the form illustrated in Figures 1 to 7, the switch blade and contact and associated parts have been illustrated and described as mounted upon single insulators. When used in high tension systems, the switch structure is mounted upon stacks of insulators in a known manner. Under such conditions, during opening movement of the blade and, particularly, while the blade is being pulled out of or withdrawn from the contact jaws, the stacks of insulators carrying the contacts and the blade and associated parts are subjected to severe strain and are forced toward each other, which is objectionable for many reasons. In Figures 8 and 9, I have illustrated a modified form of switch in which this objection is avoided. In this form the blade 14 includes two blade members 83 which diverge rearwardly or outwardly of the blade and are riveted or otherwise suitably secured to the arms of a blade bracket 85 of substantially U-shape, having rearwardly projecting ears 86. The rearward portion of each blade member 83 is offset laterally at 87 and is confined between the upper end of a contact link 88 and the upper end of one of the main blade supporting and operating links 89, the lower ends of these links being pivoted on the pin 69, and pin 67 passing through the offset portion 87 of blade member 83 and through the upper ends of links 89 and 88. Radially slotted spring clamping washers 90 are mounted upon the pins 67 and 69 and confined between the heads of the pins and nuts 91 threaded thereon, respectively, and the contact link 88. These washers hold the contact links tightly against the blade members 87 and the contact strips 44 assuring proper electrical contact therebetween. This renders it possible to do away with the flexible leads between the contact strips and the blade, which leads, though satisfactory under normal conditions, are sometimes objectionable as being more or less unsightly and bulky, particularly on switches of high capacity. The construction and operation of the linkage system in opening and closing this blade is the same as that illustrated in Figures 1 to 7 inclusive and above described in detail. It is to be noted, however, that the links 89 are spaced further apart at their lower ends than the links 68 in the form illustrated in Figures 1 to 7, to accommodate the arms 92 of an elongated U-shaped brace supporting frame 93, the rearward ends of the arms 92 being mounted about the pin 69 for free movement thereon and confined between links 89 and sleeve 70 of link 71. The blade stop member 94 is secured to the supporting frame 93 by being

threaded therein, or in any other suitable manner, and projects forwardly therefrom through an eye 95 of a connecting and guide member 96 rigidly secured to blade 14 and depending therefrom. When the blade 14 is in closed position, the inner or forward end of the member 94 is disposed closely adjacent a bumper 97, which may be formed of hard wood or any other suitable or preferred material, this bumper being mounted about a cap screw 98 secured in the cap plate or member 24 adjacent the contact member or jaws. This cap screw is secured in adjustment by a jam nut 99 and the member 97 is held against endwise movement between the nut 99 and a second nut 100 threaded on the cap screw at the upper end of the member. This cap screw is adjusted for contact by a U-shaped stop and guard member 100 secured about the blade in position to strike the head of the screw as the blade approaches full closed position, preventing downward movement of the contact portion of the blade beyond the contact jams. The cap screw and associated parts, with the exception of the bumper 97, is provided in the form of switch illustrated in the Figures 1 to 7 inclusive, in which form they function in the manner stated to limit downward movement of the blade during closing thereof. As stated, in this modified form the fixed contact and the blade structure and associated parts instead of being mounted on single insulators are mounted on stacks of insulators 102—103 and 104. When the blade is opened by exerting end pull thereon to withdraw the blade from the jaws of the fixed contact, the stacks 102 and 103, and the stack 104 are moved toward each other slightly until the brace or spacing member 94 contacts with the bumper 97, after which this member serves to positively prevent any further movement of the stacks toward each other, so that the blade can be drawn from the contact and swung into open position in the manner previously described. As the blade is pulled out of the contact, eye 95, of member 96 moves rearwardly or outwardly along the spacing member 94 and when the blade is swung upwardly into full open position, this spacing member slides through the eye 95, or, more correctly stated, the eye 95 slides along the spacing member toward the upper or free end thereof. It will be noted that the eye 95 is of appreciably greater size than the member 94, permitting the latter to change its angular relation to the eye without binding of parts.

In Figures 10 and 11, we have illustrated another modification of our invention by which it is particularly adapted for use with a switch of the underhung type. In this form, the switch is supported in inverted position and the blade opens downwardly and closes upwardly, as is well understood in the art. The linkage arrangement for opening and closing the blade, in this form, is the same as in the form illustrated in Figure 1 and operates in the same manner except that the blade hangs downwardly and the toggle connecting the blade to the supporting member does not lock the blade against movement in closing direction. In the underhung switch, the blade, as soon as freed from the contact jaws of the switch, drops, unless means are provided to prevent this, causing a sudden jerk on the switch operating mechanism and imposing undesirable strain on the same, as well as subjecting the operator's arm and wrist to a sudden jerk where the switch is hand operated. To avoid this, I provide means whereby the linkage mechanism is locked, as the switch blade leaves the contact, in such manner as to prevent dropping of the blade. With this object I provide a gravity latch 102, which is mounted for free movement at its upper end on a pin 103 secured in the flanges 50 of the supporting member 13. This latch is provided with a detent 104, which is adapted to engage beneath a lug 105 projecting laterally from link 71*a*. The latch 102 is also provided with a lug 106 directed oppositely to lug 104 and adapted for co-operation with a lug 107 projecting from sleeve 70*a* of link 71*a*. The latch member 102 is of arcuate shape and is actuated by a finger 108 projecting from one of the main operating links 68*a* at a proper point in the operation of the blade. Link 73*a* is provided with a stop element 76*a* disposed to contact with link 71*a* when the blade is in full open position to prevent undesirable outward swinging movement of link 73*a* beyond such position.

The position of the blade, and the relative positions of the linkage elements, when the blade is closed, are illustrated in Figure 10. In opening the blade, it is first subjected to an endwise pull at the pin 67 in the manner previously described. Immediately prior to the contact portion of the blade leaving the contact of the switch, the blade and the elements of the linkage connection occupy the relative positions indicated by dotted lines in Figure 10. At this instant lug 105 passes over detent 104 of latch 102, which engages beneath the lug, link 71*a* being also in contact with the end of the cap screw 81. This locks the link 71*a* against movement in either direction so that, upon continued pull being exerted on pin 67, the link 73*a* swings about pivot pin 72 causing the blade to be swung downwardly in an arc away from the contact. It is to be particularly noted that locking the link 71*a* against movement in either direction immediately prior to the blade leaving the contact, provides a rigid connection between the blade and the link 71*a* in that the toggle formed of the links 71*a* and 73*a* cannot fold or collapse. This prevents the possi-

bility of dropping of the blade as it leaves the contact, since movement of the links 73*a* and 68*a* takes place about fixed centers. Continued movement of the blade in opening direction causes the pin 108 to contact with the inner or forward arcuate portion of the latch 102, such contact of the pin occurring after the lug 107 of sleeve 70*a* has passed beyond lug 106 of member 102. The lugs 106 and 107 co-operate to prevent movement of the latch member in releasing direction until after the blade is swung beyond the dotted line position of Figure 10. In fact, the pin or trip finger 108 does not contact with the latch 102 until the blade approaches its full open position, at which time the trip finger contacts with the detent 104, swinging the latch 102 inwardly, so as to bring the lug 106 thereof into contact with sleeve 70*a*, as illustrated in Figure 11. Pressure is exerted on the pin 67 for closing the blade, the toggle of links 71*a* and 73*a* is moved about the pin 69 as a unit since, at this time, a straight line connecting the axes of the pins 72 and 74 passes inside of the axis of the pin 69. This results in swinging the lug 105 over the detent 104 before the release pin or finger 108 passes completely out of contact with the detent. After the lug 105 passes beyond detent 104 in closing direction, lug 107 contacts with lug 106, swinging the latch 102 outwardly into operative position, after which the blade is swung into completely closed position and the parts are returned to the relative positions illustrated in Figure 10.

In Figures 12 and 13, I have illustrated another modified form of mounting the blade. In this form, the toggle links are omitted, main operating links 68 are replaced by link 109 mounted at their upper ends on a pin 110 secured through the U-shaped blade bracket 111. These links are mounted at their lower ends on pin 69 which passes through a sleeve 112, this sleeve integrally connecting the links at their lower ends. Pin 110 also passes through sleeve 113 at the outer end of bracket 111 and a cam finger 114 projects rearwardly from this sleeve centrally thereof. This cam member is disposed to contact with a roller 115 supported in a suitable manner between the spacing strips 43, the cam member being so shaped as to cause the blade to swing upwardly to open position as the pin 110 is pulled outwardly or rearwardly. This pin extends beyond bracket 111 at one end and receives a sleeve 116 which is free to turn upon the pin and is confined between the adjacent arm of the bracket and a suitable washer 117 confined between sleeve 116 and the head of a screw 118 threaded into the pin. This sleeve is connected to the operating rod 61 in the manner previously described and exerts outward pull on pin 110 when arm 53 is swung in a clockwise direction as considered in Figure 12. As will be noted more clearly from Figure 13, each link 109 is provided at its upper end with a slot 119 forming upper and lower fingers 121 and 122 respectively. These fingers co-operate with a pin 123 secured in the blade bracket 111, this pin contacting with the upper finger 121 when the blade is in closed position. When pull is exerted on pin 110, the blade 14 is first rocked slightly at its outer end by the links 109 to break the blade free of the contact in the manner previously described. Continued outward movement of pin 110 results in withdrawing the blade from the contact with a substantially rectilineal movement. After the blade has been withdrawn from the contact, pins 123 contact with the fingers 122, causing the blade to swing toward open position with the links 109. This swinging movement of the blade causes cam finger 114 to contact with roller 115, thus swinging the blade about pin 110 as it is swung into full open position by the links 109. The cam finger 114 holds the blade in position about pin 110, when it is in full open position, with the stop pins 123 in contact with the upper fingers 121. This serves to effectually lock the blade against accidental closing. When arm 53 is rocked in blade closing direction, the links 109 are swung forwardly or inwardly and downwardly and this serves, due to the contact between stop pins 123 and fingers 121, to swing the blade closed, fingers 121 remaining in contact with stop pins 123 so as to permit opening of the blade by a combined rocking and pulling movement, followed by a swinging movement into full open position, in the manner previously described.

In the form illustrated in Figure 1 of the drawings, the switch is shown as mounted in horizontal position. In practice, however, this form of switch is more commonly mounted vertically with the sleet hood or housing 33 uppermost, in which position the hood acts to best advantage to protect the jaws and the contact portion of the blade from sleet and other foreign materials.

In the several forms of switches illustrated the main operating links are shown as pivoted to the end of the blade and exert a combined raising and pulling action thereon in opening of the blade. This is brought about by reason of the fact that the pin 72 about which the link 73 is pivoted is itself movable. This pin moves in an arcuate path about the pin 69 as a center, the link 71 with its abutments 79 and 80 controlling the extent of movement of the pin 72. That is, the pin 72 is mounted so as to have a prescribed limited floating movement. While in the specific embodiment of our invention herein illustrated we have shown a link such as 71 with its stops such as 79 and 80 for prescribing and limiting this movement it is obvious that other means may be used. Any means which will provide a prescribed path of motion similar to the path

taken by the pin 72 in moving from its full line position to its dotted line position, as shown in Figure 5, will suffice, and of such means a pin and slot may be mentioned as a convenient arrangement.

As above indicated, and as will be understood, various changes in construction and arrangement of parts of our invention may be resorted to without departing from the field and scope of the same, and we intend to include all such variations as fall within the scope of the appended claims, in this application in which the preferred forms only of our invention are disclosed.

What we claim is:—

1. In a switch structure of the character described, a blade, a stationary contact, a pivot pin for the blade, a mounting for the pivot end of the blade having linkage permitting the blade to be swung about the pivot pin to engage the stationary contact, and means for moving the blade endwise out of the contact, said linkage collapsing during said movement and being extended during continued movement of said means to return the contact end of the blade to its original distance from the pivot pin.

2. In a switch structure of the character described, a blade, a stationary contact, a support, links pivoted at one end to the support and at their other end to the blade, means for exerting pull on the links away from the contact, means for stopping movement of the blade about the pivotal connection between said blade and the links after the blade has been withdrawn from the contacts and for causing movement of the blade with the links, returning the blade to its original relation to the links and locking it to said links during return movement thereof for closing the blade, and means for releasing said stop and locking means as the blade approaches full closed position.

3. In a switch structure of the character described, a blade, a stationary contact, a support, links pivoted at one end to the support and at their other end to the blade, and forming therewith a toggle, means for exerting pull on the toggle away from the contact, means permitting limited folding of the toggle as the blade as withdrawn from the contact and for locking the toggle against folding during return movement of the links for closing the blade, the limiting and locking means acting to return the blade to its original relation to the links during continued movement thereof in blade opening direction, and releasing means for releasing said limiting and locking means as the blade approaches full closed position.

4. In a switch structure of the character described, a blade, a stationary contact, a support, links pivoted to the support and to the blade and forming therewith a toggle, a second toggle connecting the blade and the support, means for stopping relative movement between the links of the second toggle after they have passed beyond dead center position during continued movement of the blade in opening direction whereby the blade is locked to the links and the second toggle for movement therewith as a unit during closing of the blade, the pivotal connection between the support and the second toggle being coincident with the pivotal connection between the support and the links, means for breaking the second toggle as the blade approaches full closed position, and means for exerting endwise pull on the blade away from the contact.

5. In a switch structure of the character described, a blade, a stationary contact, a support, means for exerting endwise pull on the blade away from the contact, linkage connections between the blade and the support causing substantially rectilineal movement of the blade during the first part of the opening movement thereof and swinging of the blade in an arc away from the contact during continued opening movement thereof, said linkage connections acting to lock the blade thereto during closing movement of the blade, and means for breaking the lock of the linkage connections as the blade approaches full closed position.

6. In a switch structure of the character described, a blade, a stationary contact, a support, means for exerting endwise pull on the blade away from the contact, linkage connections between the blade and the support including a main axis of movement and causing substantially rectilineal movement, of the blade toward said axis during the first part of the opening movement thereof and swinging of the blade in an arc about said axis and away from the contact during continued opening movement of the blade, said linkage connections acting to return the blade to its original radial relation to said main axis of movement and to lock it to the linkage during continued opening movement of the blade causing movement of the blade as a unit with the linkage connections during closing movement of said blade, and means for breaking the lock of the linkage connections as the blade approaches full closed position.

7. In a switch structure of the character described, a blade, a stationary contact, a support, means for exerting endwise pull on the blade away from the contact, links pivotally connected to the blade and to the support, a toggle pivotally connected at one end to the blade eccentric to the link connection, the other end of the toggle being pivoted to the support coaxially with the link connection to the support, means for causing movement of the toggle beyond dead center as the blade approaches full open position and for limiting such movement of the toggle, and

means for breaking the toggle as the blade approaches full closed position.

8. In a switch structure of the character described, a blade, a stationary contact, a support, links pivotally connected to the blade and to the support, a toggle pivotally connected at one end to the blade eccentric to the link connection, the other end of the toggle being pivoted to the support coaxially with the link connection to the support, the support and the toggle member connected thereto having cooperating means limiting movement of said toggle member in each direction about its pivotal connection to the support, means limiting relative movement between the members of the toggle beyond dead center as the blade is moved into full open position, said cooperating means acting to break the toggle as the blade approaches full closed position, and means for exerting endwise pull on the blade away from the contact.

9. In a switch structure of the character described, a support, a blade, a fixed contact, links pivoted at their lower ends to the support and at their upper ends to the blade, means for exerting endwise pull on the blade away from the contact for opening it, said pull being exerted in the plane of the pivotal connection between the links and the blade and such connection being in advance of the connection between said links and the support when the blade is closed whereby the links exert a lifting effect on the end of the blade remote from the contact at the initiation of the opening movement of the blade, and means cooperating with the links for swinging the blade into full open and closed positions.

10. In a switch structure of the character described, a support, a blade, a fixed contact, links pivoted at their lower ends to the support and at their upper ends to the blade, an operating rod connected to the blade, the connection between the rod and the blade being coincident with the connection between the links and the blade, and such connection being in advance of the connection between the links and the support, and means cooperating with the links for swinging the blade into full open and closed positions.

11. In a switch structure of the character described, a support, a fixed contact, a blade, and means for opening and closing the blade including operating links pivoted at one end to the support and at the other end to said blade, terminal strips connected to the support, connecting links pivoted at their ends to the support and the blade coincident with the pivots of the operating links, and means urging the connecting links into contact with the strips and the blade.

12. In a switch structure of the character described, two insulators spaced apart, a fixed contact carried by one of the insulators, a blade carried by the other insulator, means for opening and closing said blade acting to withdraw the blade from the contact in a direction toward the blade carrying insulator, and cooperating means on the insulators for limiting movement thereof toward each other by the stresses created during withdrawal of the blade from the contact.

13. In a switch structure of the character described, two insulators spaced apart, a fixed contact carried by one of the insulators, a blade carried by the other insulator, means for opening and closing said blade, said means exerting endwise pull on the blade away from the contact and pulling the blade out of the contact during opening of the blade, a bumper on the contact insulator, a brace member mounted on the blade insulator and disposed to contact with the bumper, said member limiting movement of the insulators toward each other under the stress of pulling the blade out of the contact, and means for causing movement of the brace member with the blade after the blade has been withdrawn from the contact.

14. In a switch structure of the character described, a stationary contact, a support, a blade, operating links connecting the blade to the support, means for cooperating with said links for exerting endwise pull on the blade for opening and for closing the blade, and a positive connection between the blade and the support cooperating with said means for opening and closing the blade and acting to lock the blade in open position.

15. In a switch structure of the character described, a stationary contact, a support, a blade, means for exerting endwise pressure on the blade in each direction, an operating connection between the blade and the support cooperating with said means for opening and closing the blade, and a positive connection between the blade and the support cooperating with said operating connection and acting to lock the blade in open position.

16. A disconnect switch having a contact member, a movable switch member cooperating therewith, an operating member, said movable switch member having pivotal connection with the operating member for longitudinal movement with the initial movement of the operating member from the switch closed position, and means effective upon continued movement of the operating member for thereafter imparting a swinging movement to the switch member to separate it from said contact member, said means comprising a link pivoted at one end thereof to the switch blade and having a floating support for the other end.

17. A disconnect switch having a contact member, a movable switch member cooperating therewith, an operating member, said movable switch member having pivotal connection with the operating member for lon-

gitudinal movement with the initial movement of the operating member from the switch closed position, and means effective upon continued movement of the operating member for thereafter imparting a swinging movement to the switch member to separate it from said contact member, said means comprising a link pivoted at one end thereof to the switch blade and having a floating support for the other end and including means effective after a predetermined operation of the rotatable operating member for holding the floating end of said last mentioned link and for swinging the blade away from its contact.

18. A switch including a blade pivoted at one end, means for moving the pivot over a prescribed path to open the switch, and a link one end of which has a pivotal connection with the blade, means for prescribing the path of movement of the other end of the link, said other end of the link moving over its prescribed path during the initial switch opening movement and reaching its limit of motion before the pivoted end of the blade reaches its limit of motion whereby upon further movement of the pivoted end of the blade the blade is swung about its pivot by the link.

19. A switch including a switch blade, a pivoted link upon which the blade is pivotally mounted, means for rotating the link to move the pivot point of the blade and with it the blade, and means including an initially ineffective link connected to the blade, and effective after a predetermined movement of the first mentioned link for swinging the switch blade about its pivot upon continued actuation of the blade.

20. A switch including a pair of links pivoted to swing about a common axis, a third link pivoted to one of the links, and a switch blade pivoted at spaced points to the third link and to the other one of the pair of links.

21. A switch including a long and a short link pivoted to swing about a common axis, a third link pivoted to the short link, and a switch blade pivoted to the long link and to the third link at spaced pivots.

22. A switch including a first and a second pivoted link both mounted on a stationary supporting structure, a third link pivoted to the second link, and a switch blade pivoted to both the first link and the third link.

23. A switch including a switch blade, a pair of links supporting the blade, a stationary support to which the opposite end of one of the links is pivoted and a floating support for the opposite end of the other link.

24. In a switch structure of the character described, a blade, a stationary contact, a support, links pivotally connected to the blade and to the support, the links having slots adjacent the blade, stop pins secured to the blade and operating in said slots, the slots permitting relative movement of the blade during opening movement thereof until the pins contact with the lower end walls of the slots thereby causing movement of blade with the links during continued opening movement of said blade, cam means acting during continued opening movement of the blade to return the same to its initial relation to the links with the pins in contact with the upper end walls of the slots, and means for exerting endwise pull on the blade away from the contact.

25. In a switch structure of the character described, a blade, a stationary contact, a support, links pivotally connected to the blade and to the support, the links having slots adjacent the blade, stop pins secured to the blade and operating in said slots, the slots permitting relative movement of the blade during opening movement thereof until the pins contact with the lower end walls of the slots thereby causing movement of the blade with the links during continued opening movement of said blade, an abutment member, a cam member rigid with the blade and cooperating with the abutment member during continued opening movement of the blade to return said blade to its initial relation to the links with the pins in contact with the upper end walls of the slots, and means for exerting endwise pull on the blade away from the contact.

26. In an underhung switch structure of the character described, a fixed contact, a support, a blade, links pivoted at their upper ends to the support and at their lower ends to the blade, a toggle pivoted at its lower end to the blade eccentric to the links and having its upper end pivoted to the support coaxially with the links, stop means limiting movement of the upper member of the toggle in each direction, means cooperating with said stop means for locking the upper toggle member against movement in either direction when the blade has been moved a predetermined distance in opening direction, means for releasing said upper toggle member as the blade approaches full open position to permit closing of the blade, and means for exerting endwise pull on the blade away from the contact.

27. In an underhung switch structure of the character described, a fixed contact, a support, a blade, links pivoted at their upper ends to the support and at their lower ends to the blade, a toggle pivoted at its lower end to the blade eccentric to the links and having its upper end pivoted to the support coaxially with the links, stop means limiting movement of the upper member of the toggle in each direction, means cooperating with said stop means for locking the upper toggle member against movement in either direction when the blade has been moved a predetermined distance in opening direction, means for releasing said upper toggle mem-

ber as the blade approaches full open position to permit closing of the blade, the lower toggle member being moved beyond dead center relative to the upper member as the blade approaches full open position, means carried by one of the toggle members and contacting with the other member for limiting such movement of said lower member, means for exerting endwise pull on the blade away from the contact, and means for releasing the upper toggle member as the blade reaches full open position to permit closing of said blade.

28. In an underhung switch structure of the character described, a fixed contact, a support, a blade, means for exerting endwise pull on the blade away from the contact, links pivoted at their upper ends to the support and at their lower ends to the blade, a toggle pivoted at its lower end to the blade eccentric to the links and having its upper end pivoted to the support coaxially with the links, a latch member on the support, means limiting movement of the upper toggle member in each direction, said upper member having an element coacting with the latch member for securing the upper toggle member in full blade opening position, means for preventing release of the upper toggle member during movement of the blade into full open position, the lower toggle member being moved beyond dead center position relative to the upper member as the blade reaches full open position, means carried by one of the toggle members and contacting with the other member to limit such movement of the lower member, and a trip member carried by one of the links and disposed to release the latch member as the blade reaches full open position and to hold the latch member in inoperative position until the cooperating element of the upper toggle member passes out of operative relation to the latch member in the closing of the blade.

In witness whereof, we hereunto subscribe our names this 9th day of September, 1927.

ALFRED ALSAKER.
MEINICH SKAU.