(12) INTERNATIONAL APPLICATION PUBLISHED UNDER THE PATENT COOPERATION TREATY (PCT)

(19) World Intellectual Property Organization
International Bureau

(43) International Publication Date
15 February 2007 (15.02.2007)

PCT

(10) International Publication Number
WO 2007/017648 A1

(51) International Patent Classification:
G01N 33/487 (2006.01) *G01N 33/543* (2006.01)

(21) International Application Number:
PCT/GB2006/002921

(22) International Filing Date: 4 August 2006 (04.08.2006)

(25) Filing Language: English

(26) Publication Language: English

(30) Priority Data:
0516099.9 5 August 2005 (05.08.2005) GB

(71) Applicant *(for all designated States except US)*: **INVERNESS MEDICAL SWITZERLAND GMBH** [CH/CH]; Bundesplatz 1, CH-6300 Zug (CH).

(72) Inventors; and

(75) Inventors/Applicants *(for US only)*: **SMART, David** [GB/GB]; 4 Smeaton Park, Moira, County Down, Northern Ireland BT67 0NF (GB). **PHELAN, Andrew, Peter** [GB/GB]; 1 Bucks Close, Village Road, Bromham, Bedford MK43 8HG (GB). **PORTER, Robert, Andrew** [GB/GB]; 2 Gentian Close, Rushden, Northants NN10 0UG (GB).

(74) Agent: **LIPSCOMBE, Martin, John**; Keith W Nash & Co, 90-92 Regent Street, Cambridge CB2 1DP (GB).

(81) Designated States *(unless otherwise indicated, for every kind of national protection available)*: AE, AG, AL, AM, AT, AU, AZ, BA, BB, BG, BR, BW, BY, BZ, CA, CH, CN, CO, CR, CU, CZ, DE, DK, DM, DZ, EC, EE, EG, ES, FI, GB, GD, GE, GH, GM, HN, HR, HU, ID, IL, IN, IS, JP, KE, KG, KM, KN, KP, KR, KZ, LA, LC, LK, LR, LS, LT, LU, LV, LY, MA, MD, MG, MK, MN, MW, MX, MZ, NA, NG, NI, NO, NZ, OM, PG, PH, PL, PT, RO, RS, RU, SC, SD, SE, SG, SK, SL, SM, SY, TJ, TM, TN, TR, TT, TZ, UA, UG, US, UZ, VC, VN, ZA, ZM, ZW.

(84) Designated States *(unless otherwise indicated, for every kind of regional protection available)*: ARIPO (BW, GH, GM, KE, LS, MW, MZ, NA, SD, SL, SZ, TZ, UG, ZM, ZW), Eurasian (AM, AZ, BY, KG, KZ, MD, RU, TJ, TM), European (AT, BE, BG, CH, CY, CZ, DE, DK, EE, ES, FI, FR, GB, GR, HU, IE, IS, IT, LT, LU, LV, MC, NL, PL, PT, RO, SE, SI, SK, TR), OAPI (BF, BJ, CF, CG, CI, CM, GA, GN, GQ, GW, ML, MR, NE, SN, TD, TG).

Published:
— *with international search report*

For two-letter codes and other abbreviations, refer to the "Guidance Notes on Codes and Abbreviations" appearing at the beginning of each regular issue of the PCT Gazette.

(54) **Title:** ASSAY READING DEVICE WITH DISPLAY

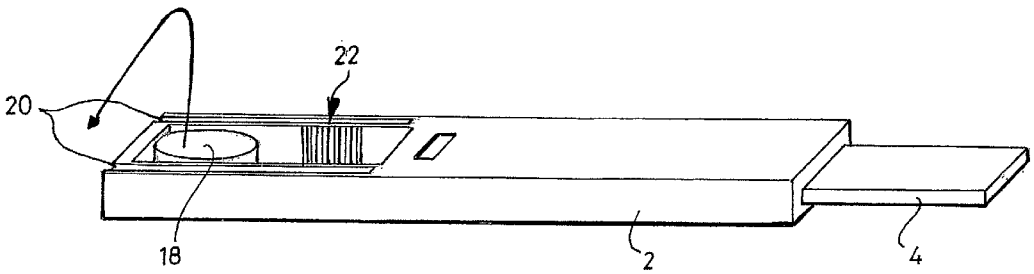

(57) **Abstract:** Disclosed is an assay result reading apparatus for reading the result of an assay performed by contacting a liquid sample with a liquid carrier or transport on or in which the assay is performed, the assay result reading apparatus comprising: a receptacle to receive the liquid carrier or transport; a reader to read the result of the assay; and a releasable attachment for releasably attaching a display which can display the assay result.

WO 2007/017648 A1

Title: Assay Reading Device with Display

Field of the Invention

The present invention relates to an integrated assay device and reader, wherein the assay device is provided with means to releasably attach a display.

Background of the Invention

Simple assay devices for use in point of care and for home testing of analytes are now widely established and commercially available.

EP 291194 discloses an assay device which comprises a porous carrier containing a particulate labelled binding reagent which is freely mobile in solution and specific for binding an analyte of interest. The device also comprises an unlabelled specific binding reagent for the same analyte, wherein the unlabelled binding reagent is immobilised in a test zone located downstream of the specific binding reagent. A liquid sample believed to contain the analyte of interest is applied to the porous carrier and reacts with the labelled reagent to form a labelled analyte-binding partner complex. The complex migrates along the porous carrier into a test zone where it interacts and forms a complex with the immobilised unlabelled specific binding reagent, thus enabling determination of the amount of analyte present in the sample. However, this type of assay requires interpretation of the result by a user, which interpretation may not be accurate.

Electronic readers for use in combination with assay test strips for determining the concentration and/or amount of analyte in a liquid sample are known. An example of such a reader/test strip combination is disclosed in EP 0653625, wherein the reader uses an optical method in order to determine the test result. An assay test strip is inserted into the reader and light from a light source, such as a light emitting diode (LED), is shone onto the test strip. The reflected or transmitted light is then detected by a photodetector, thus

allowing the determination of the amount of labelled analyte bound to the immobilised reagent and concentrated in the test zone.

It is important that the assay reader and test strip of such devices are carefully aligned due to the fact that the visible signal formed in the detection zone (and a control zone) is quite narrow in width and consequently a small displacement of the detection or control zone relative to the corresponding photodetector may have a significant effect on the reading made by the photodetector. A further consideration is the requirement for the photodetector to be as close as possible to the test strip in order to attain optimal signal intensity. Therefore, when using such devices it is important for the user to carefully align the test stick with the assay result reader. Such precise alignment may be difficult, especially for devices intended to be used in the home.

To overcome this problem, assay devices have been designed wherein the test strip and reader are incorporated in a single integral unit. One example of an assay device which is suitable for the detection of the pregnancy hormone human chorionic gonadotrophin (hCG) is sold by Unipath Limited under the brand name Clearblue Digital™. The device comprises an assay test strip, a reader and a display that displays the results of the assay test.

Such integral electronic assay devices have the advantage that they improve the accuracy of the assay result, eliminating the requirement for the result to be interpreted by a user. Such devices are known in the art and are disclosed, for example, in EP 1,484,601, EP 1,484,611 and EP 1,484,613. Typically, the integral unit is provided with means to read the assay result, signal transduction means, display means, circuitry and an electrical power source. Conventionally, the display comprises an LCD, which requires a power source both to change and maintain displayed information. One disadvantage associated with such devices is that once the power source has been depleted or removed, the displayed information is lost. Thus, such assay devices require a constant power supply to display the result of the assay. Consequently, the lifetime of the result displayed is determined by the power source used.

Summary of the Invention

In a first aspect the invention provides an assay result reading apparatus for reading the result of an assay performed by contacting a liquid sample with a liquid carrier or transport on or in which the assay is performed, the assay result reading apparatus comprising: a receptacle to receive the liquid carrier or transport; a reader to read the result of the assay; and a releasable attachment for releasably attaching a display which can display the assay result.

Preferably the apparatus further comprises a releasably attached display, which will preferably be a zero power display, which term is explained below.

The releasable attachment may comprise any suitable mechanism for releasably attaching the display to the device. Preferably the mechanism is one which can be actuated without the need for any tools (e.g. avoids the need for a screwdriver or the like). In one embodiment there is provided a resiliently deformable portion on the housing or on the display, which can be accommodated and retained within a corresponding aperture, recess or groove on the display or housing, as appropriate.

The liquid carrier or transport preferably comprises a lateral flow assay device or test strip. Such lateral flow assay devices or test strips are familiar to those skilled in the art. Typically they comprise a porous matrix, such as nitrocellulose or similar material, usually together with a supporting or backing layer. The supporting or backing layer may comprise a relatively rigid material, such as a synthetic plastics material. Mylar is especially suitable in this regard.

In one embodiment the liquid carrier or transport comprises an integral component of the device, such that the invention provides an integrated apparatus for performing an assay to test for the presence and/or amount of an analyte of interest in the liquid sample. In other embodiments, the liquid carrier or transport does not form an integral component of the device of the invention. For example, a suitable lateral flow test strip may be made and sold separately. In one particular embodiment, the device of the invention comprises

means for making a releasable engagement with a liquid carrier or transport. Preferably, the liquid carrier or transport can be inserted into the assay result reading device of the invention in order to read the assay result and, once the reading has been taken, the liquid carrier or transport can be ejected or removed from the reading device and be disposed of.

In accordance with the present invention, the display may be detached from the apparatus following generation of the assay result and the information recorded on the display is maintained in the effective absence of a power source for at least a finite period of time. Preferably, in the absence of a power source, the display can be maintained for at least 24 hours, more preferably at least 72 hours, and most preferably at least 168 hours.

A display, which can maintain an information display under such circumstances, may be referred to for present purposes as a zero power display. Preferred zero power displays are electrical, in the sense that electrical power is used initially to generate the information display or to vary the display, but thereafter, no power is required to maintain the information display. Desirably the information display comprises an alphanumeric display. Preferred zero power displays are available from ZBD (Zenithal Bistable displays; Malvern Research Park, Worcester: see www.zbddisplays.com). The zenithal bistable display is a type of LCD that requires no power to maintain an image. The technology is based on grating structures, developed by ZBD, as described in EP 0856164. In the ZBD display, there are two stable orientations for the molecules, resulting in either a black or white image. The zenithal bistable display uses a simple micro-structured grating surface to control the alignment of the liquid crystal molecules. The grating structure stores the image at the surface such that the image is retained after removal of the power source, despite mechanical shock. The bistability of the display means that complex images can be written a line at a time without the additional expense of using thin film transistors (TFTS) behind each pixel.

Other zero power displays that may be used in accordance with the present invention are conducting polymer, electrochromic polymer and electronic ink displays.

Electronic ink displays (available from E Ink Corporation, Cambridge MA, USA) are formed by printing an electronic ink (comprising a plurality of tiny microcapsules containing positively and negatively charged particles) onto a sheet of plastic film that is laminated to a layer of circuitry. The circuitry forms a pattern of pixels that can be controlled by a display driver such that, once formed, an image may be displayed in the absence of a power source.

BiNem displays (available from Nemoptic, 1 rue Guynemer, Magny les Hameaux, France) use LCD technology to generate a display. The display means is bistable (i.e. stable in either of two different conformations), such that the display content remains without any power source, due to an internal memory effect. In addition, the display uses nematic liquid crystals of the type used by most LCDs.

Olight displays, developed by Dupont (120 Cremona Driva, Santa Barbara, California USA) use organic materials in order to produce light. Thin layers of organic material are sandwiched between appropriate anode and cathode layers and a relatively modest voltage (typically between 2 and 10V) is applied across the organic material, causing it to emit light in a process known as electroluminescence. The display can be maintained for a finite period of time once removed from a power source.

Any of the foregoing displays may be suitable for use in the present invention.

In accordance with the present invention, the zero power display may be used to display information relating to the assay. Typically, the display is used to indicate the result of the assay. Alternatively, or additionally, the display may be used to display a date and time of the assay, patient information, batch code information, etc. The display may be detached from the integrated apparatus using any suitable detaching or releasing mechanism known to those skilled in the art. In one embodiment, the display may be attached to the apparatus using a releasable latching mechanism. Conveniently, the zero power display may be removed from the integrated apparatus and the result may be retained and stored for reference at a future date.

Typically, the apparatus of the present invention is additionally provided with a signal transduction mechanism, circuitry and a power source.

The apparatus of the present invention preferably comprises a lateral flow immunoassay device, in which a liquid sample, possibly containing the analyte of interest, is applied to and migrates along a test strip. Assays of this type are well known to those skilled in the art and are disclosed, for example, in EP 0291194.

In preferred embodiments of the present invention, the test strip is in liquid flow communication with a sample receiving zone to which the sample is applied. The test strip generally comprises a reaction zone containing a specific binding reagent that is capable of binding the analyte of interest to form a reagent-analyte complex, and a test zone containing an immobilised reagent that is capable of binding the reagent-analyte complex.

Typically, the reaction zone is located downstream from the sample receiving zone and the test zone is located downstream from the reaction zone.

Preferably, the test strip is porous, thus allowing the sample to permeate along the test strip. More preferably, nitro-cellulose is selected as the test strip material. This has advantages over conventional test strip materials, such as paper, as it has a natural ability to bind proteins without the requirement for earlier sensitisation.

In a preferred embodiment, the binding of a reagent-analyte complex to the immobilised reagent in the test zone results in the production of a signal, which is measured using the assay reader. In principle, the integrated apparatus of the present invention may be used for the detection of any amount, or the presence of, an analyte. The sample may be biological, industrial or environmental in origin.

The signal, which accumulates during performance of the assay, may be anything that is suitable for the purpose of the assay. Typically, the accumulation of signal involves the

formation or accumulation of a readily detectable substance, such as a coloured reaction product. Preferably, the assay involves accumulation of a labelled reagent in the test zone of the test strip. Some examples of labels that may be used in accordance with the present invention are enzymes, radio labels, fluorochromes, coloured particles or the like. Preferably the label comprises a labelled particle, wherein the labelled particle may be a particle of gold or a coloured polymer, such as latex.

Generally, the presence of analyte in the sample will tend to cause the accumulation of signal. However, in other assay formats (such as competitive or displacement format assays), the absence of the analyte of interest results in the accumulation of the relevant signal.

In a preferred embodiment of the present invention, the assay result reader comprises an optical detector system to monitor the accumulation of the label. The reader will typically comprise a means of producing a signal (desirably a digital signal) which is proportional to the level of label accumulated. Conveniently, an optical detector system may be used to measure any optical property, for example, the amount of light reflected and/or transmitted from a test zone in which the label accumulates.

Preferably, the optical detection system will comprise at least one light source and at least one photodetector. More preferably, the light source comprises a light emitting diode (LED). Light that is reflected or transmitted is measured by the photodetector. For present purposes, reflected light is taken to mean the light from the light source which is reflected from the porous carrier or other liquid transport means onto the photodetector. Typically, in this instance, the detector is provided on the same side of the carrier as the light source. Transmitted light is taken to mean light that passes through the carrier. To detect transmitted light the detector is typically provided on the opposite side of the carrier to the light source.

Preferably, the apparatus comprises a housing that is formed from an opaque material. Conveniently, the housing is formed from a synthetic plastics material, for example,

polycarbonate, ABS, polystyrene, or polypropylene. Desirably, an opening is provided at one end of the housing, such that a test strip or similar porous carrier may be inserted through the aperture, or may protrude therethrough if already accommodated within the housing. In order to conduct an assay measurement using an integrated apparatus in accordance with the present invention, a test strip accommodated within the apparatus is contacted with a liquid sample. In an alternative embodiment, a liquid sample may first be applied to a sample receiving zone of the test strip, and the strip then inserted into the apparatus. The sample migrates along the test strip and any analyte present in the sample undergoes the relevant reaction.

Once the result has been determined the display may be detached from the apparatus and stored for future reference. Preferably, the display may initially be attached to the apparatus and subsequently removed following performance of the assay.

Advantageously, the apparatus of the present invention may be used in the home or in point of care testing.

In one embodiment, the apparatus of the present invention may be used to detect the pregnancy hormone hCG. Thus, for example, a display showing a positive result (i.e. pregnant) can be removed from the apparatus of the invention and retained as a keepsake or memento, and the displayed information will not be lost.

In accordance with another embodiment, the apparatus of the present invention may be used for the detection of infectious pathogens, such as *Streptococcus* A or for the diagnosis of infectious or other diseases. Advantageously, the apparatus may be used to test for the presence of *Strep.* A in the home. The display may then be detached from the apparatus and the result may then be presented to a doctor or other healthcare professional.

In a further embodiment, the apparatus of the present invention may be used in the detection of drugs of abuse.

Prior to the present invention, it has not been possible to store a result separately from the assay device. Thus, conventional lateral flow assay devices often have a display, which has been contaminated with the sample from the assay device. The apparatus of the present invention has the advantage that the display can be detached from the apparatus, thus minimising the risk of disseminating or spreading contaminated material and thereby improving hygiene.

In a second aspect the invention provides a method of determining the presence and/or amount of an analyte of interest in a sample, the method comprising the step of contacting the sample with the liquid carrier of an apparatus in accordance with the first aspect defined above.

In a third aspect, the present invention provides a method of making an integrated apparatus in accordance with the first aspect of the invention defined above.

In a further aspect, the present invention provides an integrated apparatus for performing an assay to test for the presence and/or amount of an analyte of interest in a liquid sample in accordance with the first aspect defined above, wherein the apparatus has means for attachment to a zero power display.

For the avoidance of doubt, it is expressly stated that any of the features of the invention described as "preferred", "desirable, "convenient", "advantageous" or the like may be adopted in isolation or may be adopted in combination with any other feature or features so-described, unless the context dictates otherwise.

The invention will now be further described by way of illustrative example and with reference to the following drawings in which:

Figure 1 is a perspective view of one embodiment of an integrated assay device and reader and an attached display in accordance with the present invention;

Figure 2 is a perspective view of the device shown in Figure 1, with the display attached;

Figure 3 is a plan view of the embodiment of the device shown in Figure 2; and

Figure 4 is a side view, partly in section, of the embodiment of the device shown in Figure 1 (with the display attached).

Example 1

An embodiment of the integrated apparatus in accordance with the present invention is shown in Figure 1.

The apparatus is approximately 12cm in length and 2cm in width and is generally finger or cigar-like in shape. However, any convenient shape may be used. The integrated apparatus comprises a housing (2), formed from an opaque synthetic plastics material. At one end of the housing there is provided a narrow opening through which a liquid transport or carrier (4) can protrude beyond the housing for contacting with a liquid sample.

A zero power display (6) is releasably attached to the apparatus and displays information to a user. The zero power display (6) can be removed from the apparatus after generation of the assay result. Downward pressure on a resiliently deformable clip (8) enables the Zero power display to be removed from the housing after the assay is complete and the result has been displayed. The zero power display continues to display the assay result and any other displayed information on isolation from a power source such that the result can be retained by the user for future reference. The information recorded on the display may be retained following removal from the apparatus or alternatively, following depletion of the power source.

As best seen in Figures 3 and 4, the housing (2) accommodates an analytical assembly, indicated generally by reference numeral (10).

The analytical assembly (10) comprises a printed circuit board (12) upon which are mounted two LEDs and two photodiodes (14), aligned with a test zone of a nitrocellulose lateral flow strip (16), which is in liquid flow communication with the sampling portion (4) of the liquid transport or carrier. The test zone is the zone in which a labelled reagent accumulates in the presence (or absence, as appropriate) of the analyte of interest. This accumulation affects an optical property of the test strip (16), such as its reflectivity or transmissivity, which property can be measured by use of the LED/photodiode arrangement. Hence the photodiodes produce an output current, the magnitude of which is related to the amount of label accumulated in the test zone.

The analytical assembly (10) also comprises an electrical power source (button cells 18) to provide power to the display (6) when it is attached to the housing (2). The display (6) is releasably attached to the housing by retention of the clip (8) in a suitably shaped and dimensioned aperture provided in the housing (2). In addition, grooves (20) are provided on the top of the housing, into which grooves a slightly flanged portion of the display (6) may be introduced by a sliding movement from the open end of the housing (2). When correctly positioned, electrical connectors on the display come into contact with electrical connectors (22) provided on the housing, thereby ensuring electrical connections between the display (6) and the analytical assembly (10).

The analytical assembly (10) comprises signal transduction components (24), comprising a data storage buffer, an analogue→digital converter (ADC) and a microprocessor or microcontroller. The display (6) is responsive to an output from the microprocessor or microcontroller.

Claims

1. An assay result reading apparatus for reading the result of an assay performed by contacting a liquid sample with a liquid carrier or transport on or in which the assay is performed, the assay result reading apparatus comprising: a receptacle to receive the liquid carrier or transport; a reader to read the result of the assay; and a releasable attachment for releasably attaching a display which can display the assay result.

2. Apparatus according to claim 1, further comprising a releasably attached display.

3. Apparatus according to claim 2, wherein the releasably attached display is a zero power display.

4. Apparatus according to any one of the preceding claims, further comprising a power source.

5. Apparatus according to claim 4, wherein the power source is a source of electrical power.

6. Apparatus according to any one of the preceding claims, wherein the display, when removed from the apparatus, continues to display the assay result or other displayed information for at least 24 hours.

7. Apparatus according to claim 6, wherein the display, when removed from the apparatus, continues to display the assay result or other displayed information for at least 72 hours.

8. Apparatus according to claim 6, wherein the display, when removed from the apparatus, continues to display the assay result or other displayed information for at least 168 hours.

9. Apparatus according to any one of the preceding claims, wherein the display comprises a bistable liquid crystal display, a conducting polymer display, an electrochromic polymer display, or an e-ink display.

10. Apparatus according to any one of the preceding claims, further comprising a liquid carrier or transport.

11. Apparatus according to claim 10, wherein the liquid carrier or transport is porous.

12. Apparatus according to claim 10, wherein the liquid carrier or transport comprises a lateral flow test strip.

13. Apparatus according to any one of the preceding claims, further comprising at least one light source and/or at least one photodiode.

14. Apparatus according to any one of the preceding claims, further comprising one or more components selected from the group consisting of: a microprocessor or micro-controller; an analogue→digital converter, and a data storage buffer.

15. Apparatus according to any one of the preceding claims, wherein the liquid carrier or transport can be releasably engaged with the result reading apparatus and can be ejected or removed from the apparatus once the assay result has been read.

16. A method of making an assay result reading apparatus in accordance with any one of the preceding claims, the method comprising the step of assembling the necessary components within a housing, the housing having releasable attachment means for releasably attaching a display.

17. A method of reading an assay, using assay result reading apparatus in accordance with any one of claims 1-15.

Fig. 1

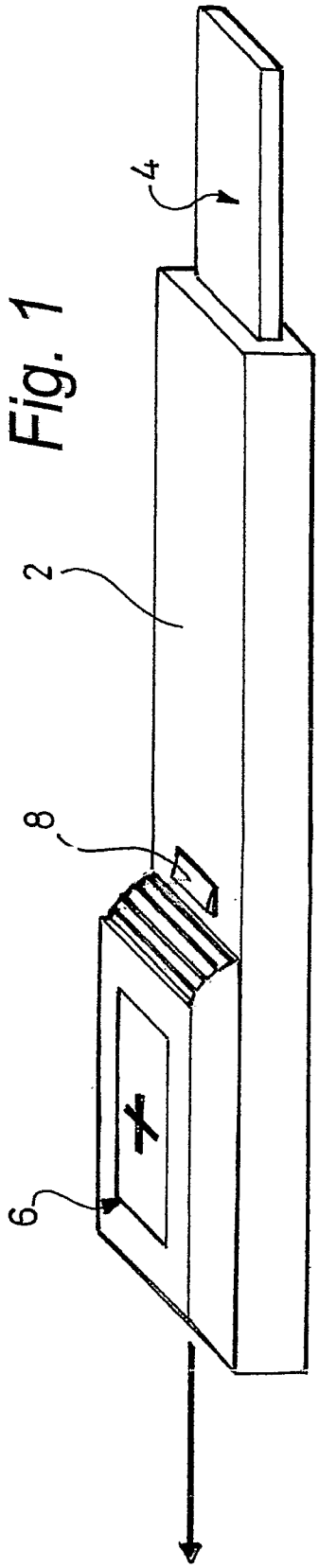

Fig. 2

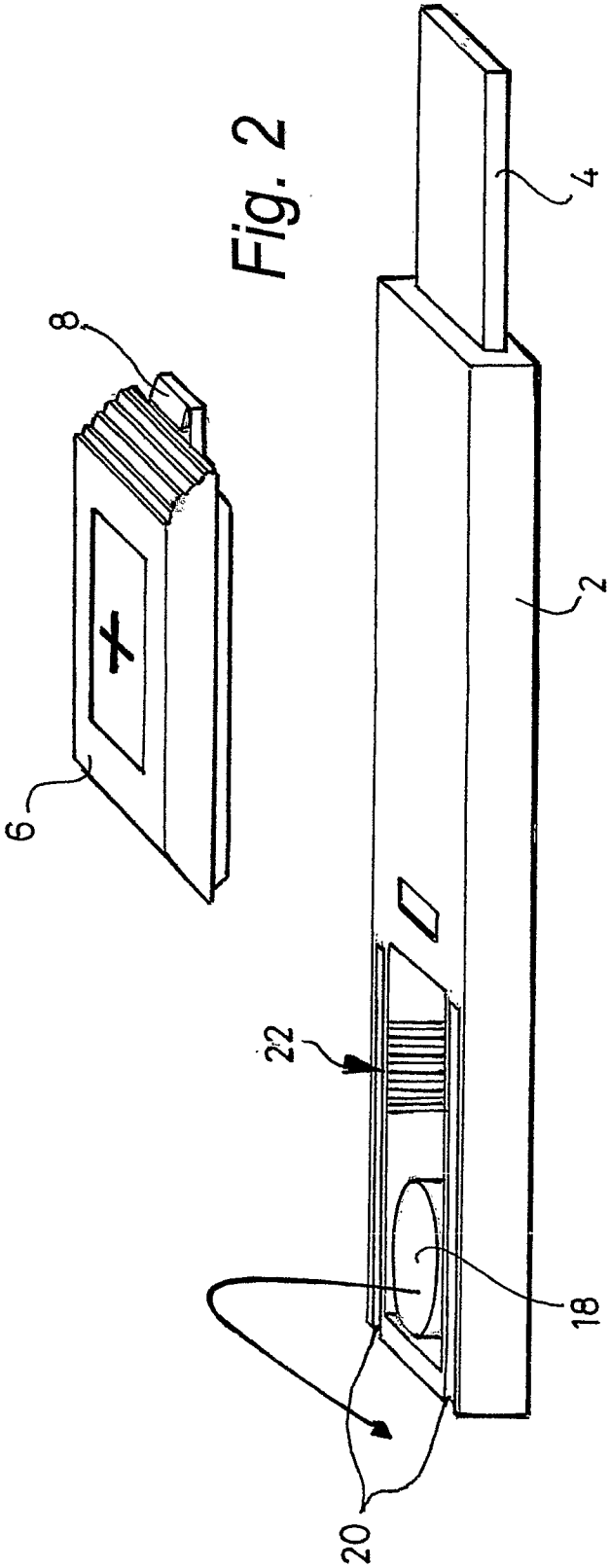

Fig. 3

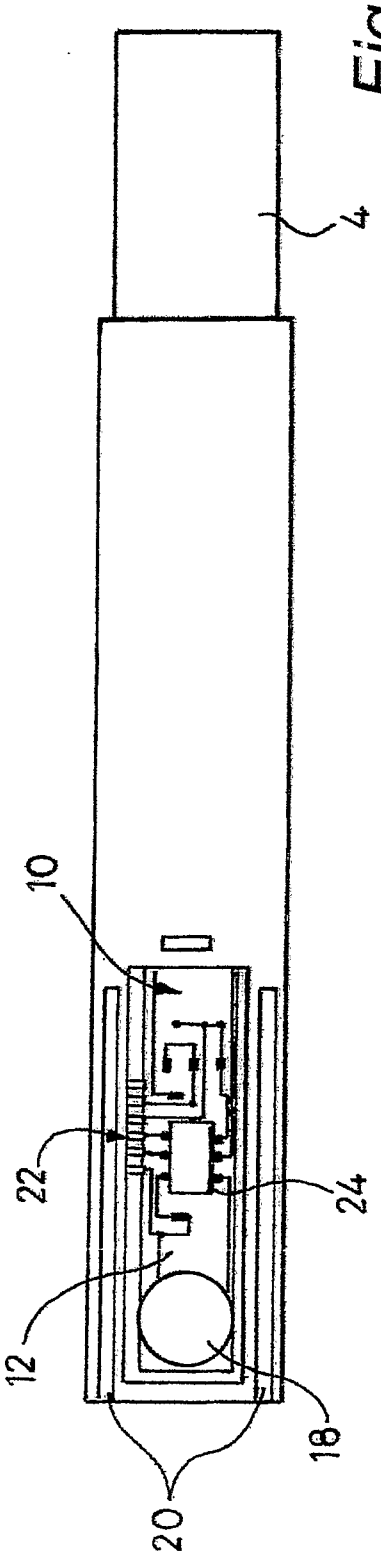

Fig. 4

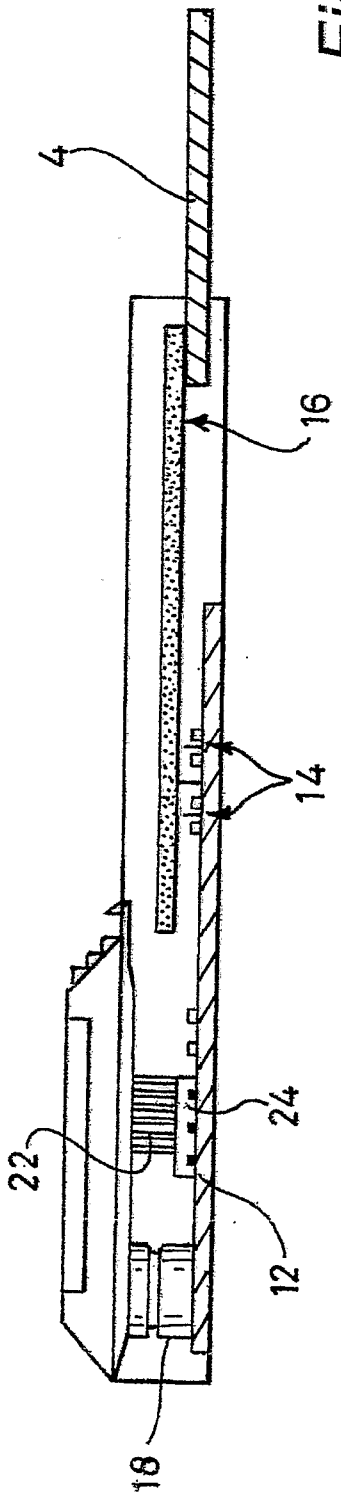

INTERNATIONAL SEARCH REPORT

International application No
PCT/GB2006/002921

A. CLASSIFICATION OF SUBJECT MATTER
INV. G01N33/487 G01N33/543

According to International Patent Classification (IPC) or to both national classification and IPC

B. FIELDS SEARCHED

Minimum documentation searched (classification system followed by classification symbols)
G01N

Documentation searched other than minimum documentation to the extent that such documents are included in the fields searched

Electronic data base consulted during the international search (name of data base and, where practical, search terms used)
EPO-Internal, WPI Data

C. DOCUMENTS CONSIDERED TO BE RELEVANT

Category*	Citation of document, with indication, where appropriate, of the relevant passages	Relevant to claim No.
X	US 5 179 005 A (PHILLIPS ROGER [US] ET AL) 12 January 1993 (1993-01-12) column 8, line 25 - column 9, line 6 column 11, line 14 - line 28 figures 2-4	1-17
X	US 5 837 546 A (ALLEN MICHAEL P [US] ET AL) 17 November 1998 (1998-11-17) column 8, line 21 - column 10, line 59; figures 2,4	1-17
X	US 5 179 288 A (MIFFITT DONALD [US] ET AL) 12 January 1993 (1993-01-12) figure 3	1-17

-/--

[X] Further documents are listed in the continuation of Box C.

[X] See patent family annex.

* Special categories of cited documents :

"A" document defining the general state of the art which is not considered to be of particular relevance

"E" earlier document but published on or after the international filing date

"L" document which may throw doubts on priority claim(s) or which is cited to establish the publication date of another citation or other special reason (as specified)

"O" document referring to an oral disclosure, use, exhibition or other means

"P" document published prior to the international filing date but later than the priority date claimed

"T" later document published after the international filing date or priority date and not in conflict with the application but cited to understand the principle or theory underlying the invention

"X" document of particular relevance; the claimed invention cannot be considered novel or cannot be considered to involve an inventive step when the document is taken alone

"Y" document of particular relevance; the claimed invention cannot be considered to involve an inventive step when the document is combined with one or more other such documents, such combination being obvious to a person skilled in the art.

"&" document member of the same patent family

Date of the actual completion of the international search	Date of mailing of the international search report
20 October 2006	27/10/2006

Name and mailing address of the ISA/	Authorized officer
European Patent Office, P.B. 5818 Patentlaan 2 NL – 2280 HV Rijswijk Tel. (+31-70) 340-2040, Tx. 31 651 epo nl, Fax: (+31-70) 340-3016	Purdie, Douglas

1

Form PCT/ISA/210 (second sheet) (April 2005)

INTERNATIONAL SEARCH REPORT

International application No
PCT/GB2006/002921

C(Continuation). DOCUMENTS CONSIDERED TO BE RELEVANT

Category*	Citation of document, with indication, where appropriate, of the relevant passages	Relevant to claim No.
X	EP 1 484 601 A2 (INVERNESS MEDICAL SWITZERLAND [CH]) 8 December 2004 (2004-12-08) cited in the application column 7, line 8 - column 9, line 7	1-17
A	FR 2 598 501 A1 (DUGELAY INES [FR]) 13 November 1987 (1987-11-13) claim 2	2
A	US 4 174 631 A (HAMMERSLAG JULIUS G [US]) 20 November 1979 (1979-11-20) column 2, line 29 - line 44; figures 1,4	2

1

INTERNATIONAL SEARCH REPORT

Information on patent family members

International application No
PCT/GB2006/002921

Patent document cited in search report	Publication date	Patent family member(s)	Publication date
US 5179005 A	12-01-1993	NONE	
US 5837546 A	17-11-1998	NONE	
US 5179288 A	12-01-1993	AT 165666 T	15-05-1998
		AU 646179 B2	10-02-1994
		BR 9203817 A	20-04-1993
		CA 2079262 A1	31-03-1993
		DE 69225292 D1	04-06-1998
		DE 69225292 T2	22-10-1998
		DK 539035 T3	25-01-1999
		EP 0539035 A2	28-04-1993
		ES 2115645 T3	01-07-1998
		GR 92100384 A	21-06-1993
		JP 5203656 A	10-08-1993
		SG 52533 A1	28-09-1998
EP 1484601 A2	08-12-2004	CN 1573316 A	02-02-2005
		DE 102004027131 A1	23-12-2004
		DE 202004008809 U1	14-10-2004
		FR 2855876 A1	10-12-2004
		JP 2004361406 A	24-12-2004
FR 2598501 A1	13-11-1987	NONE	
US 4174631 A	20-11-1979	AU 5100979 A	09-04-1981
		BE 879689 A1	29-04-1980
		CA 1132367 A1	28-09-1982
		DE 2938031 A1	02-04-1981
		FR 2466007 A1	27-03-1981
		GB 2062347 A	20-05-1981
		IT 1119859 B	10-03-1986
		NL 7907078 A	25-03-1981
		RO 77931 A1	25-12-1981