Jan. 20, 1931. W. J. DE WITT 1,789,518

PEDIFORM ARTICLE

Filed March 1, 1929

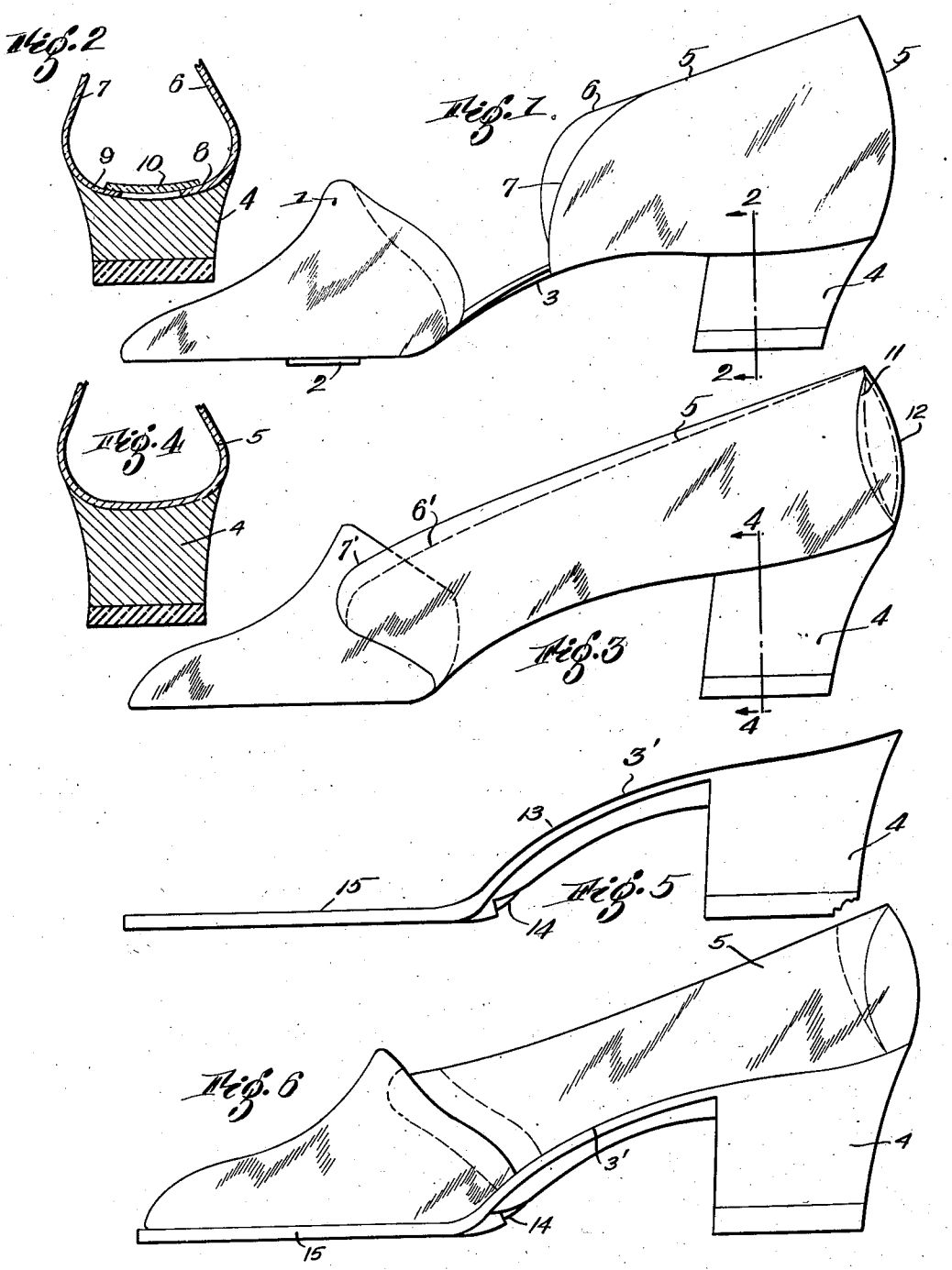

Inventor
William J. De Witt
by Roberts, Cushman & Woodberry
his Attorneys.

Patented Jan. 20, 1931 1,789,518

UNITED STATES PATENT OFFICE

WILLIAM J. DE WITT, OF AUBURN, NEW YORK, ASSIGNOR TO SHOE FORM CO., INC., OF AUBURN, NEW YORK, A CORPORATION OF NEW YORK

PEDIFORM ARTICLE

Application filed March 1, 1929. Serial No. 343,685.

This invention relates to a pediform article adapted to be used in fitting lasts and footwear to the human foot under various conditions, and is a continuation in part of my co-pending application Serial No. 221,536, filed September 23, 1927.

In the art of making footwear and determining the accuracy of fit of various styles of shoes to the human foot, it has heretofore been proposed by me to employ a hollow, transparent shoe form which has been made upon the last to be tested or upon a last used for making shoes (as more fully described in my co-pending application Serial No. 185,615, filed April 21, 1927) whereby the accuracies or discrepancies in fit may be directly observed,—as well as felt,—by the wearer.

Such devices and procedures provide for the determination of the fit of the shoe or last (corresponding to the shoe form) with respect to the human foot taken as a model,—about the toe, ball, waist, instep and heel,—and serve accurately to measure the several dimensions of those parts of the foot at rest. But they do not make provisions for determining the changes which these parts of the foot undergo when the pressure of the person's weight is taken up by the foot and exerted against the sole and sidewalls of the shoe. And furthermore, they do not take into account the normally elevated position of the person's heel relative to the ball and arch of the foot and the consequent conformation and tendency of the foot to thrust itself forwardly into the toe of the shoe.

Accordingly it is an object of this invention to provide a pediform article adapted to be used in fitting lasts and footwear to a human foot while in the position and conformation which the foot assumes in the finished shoe and under the pressure transmitted thereto while the person is standing, walking, etc. Other objects will appear from the following disclosure.

The invention includes generally the provision of a hollow pediform article having a strong or solid heel similar to that of the shoe which it represents, a flexible sole member or shank extending forwardly thereof (corresponding to the shank and sole of the shoe), and an upper, corresponding to the upper portion of the shoe, and fashioned wholly from a suitable resilient, transparent sheet material such as celluloid, or partly from transparent and partly from leather, paperboard, or the like. The upper may include a toe member, quarter, vamp member, etc., if desired, and a counter or heel portion, all conforming generally to the contour and determinations of the last which it represents and upon which it was fashioned. It has been found particularly desirable to make the toe member of transparent material and under some conditions to make the counter and other portions or all of the upper of such material.

The pediform article is preferably fashioned by molding the several parts over the lasts to be tested or upon a last which has already been standardized and is employed for making shoes. The pediform article is placed upon the foot of the wearer in the usual way and the accuracy of its overall dimensions and its proportions relative to the person's foot are readily ascertained, as well as the conformation of the arch of the foot in respect to the height of the heel. The wearer then allows his weight to bear upon the foot, in the usual manner or while assuming various positions, the corresponding effects upon the disposition of the person's foot with respect to the shoe form being directly observed and if desired indicated by appropriate markings on the article itself. The last may then be remodelled according to such corrections as may be necessary and a new pediform article is made from the corrected last and tested in a similar manner.

In this way only a few pediform articles need be made for the readjusting and perfecting of a new style of last to the requirements of the human foot. The articles are readily fashioned in whole or in part from sheet celluloid and shaped upon the initial or corrected last, as by heat and pressure, thus producing a substantially exact replica of the dimensions as well as of the shape of the last at each stage.

When the last is finished the pediform arti-

cle made thereon is an accurate representation of the shoes which will subsequently be made from such last. Moreover, the foot which is taken as a model is presented to the articles in the various positions of use and in the conformations which are given to it by the sole member and heel of the shoe. Hence it assures a complete indication of the conditions to be met by the shoe while in actual use upon the foot of the prospective wearer.

A typical application of the invention will be described, reference being had to the forms illustrated by the accompanying drawings, in which:

Fig. 1 is a side view of a pediform article with toe member and a counter, in which the side pieces of the counter are spaced apart;

Fig. 2 is a cross section on line 2—2 of Fig. 1;

Fig. 3 is a side view of a pediform article in which the two sides of the counter extend across the sole of the shoe;

Fig. 4 is a cross section on line 4—4 of Fig. 3;

Fig. 5 is a side view of a heel, sole and shank member;

Fig. 6 is a side view of the heel, sole and shank member of Fig. 5, assembled with a sole member and counter.

In the drawings (Fig. 1) the article comprises a hollow toe member 1, having a reinforcing piece 2 across the bottom and a sole or shank member 3 extending rearwardly in conformity with the arch to the upper surface of heel 4, to which it is joined. A counter 5 surmounts the heel, its forwardly projecting sidewalls 6 and 7 being inturned at the bottom 8, 9 as shown in Fig. 2. The inturned edges may be covered by an inner sole (or the end of the sole or shank member) 10.

The modification shown in Fig. 3 is similar to that already described, the side walls 6′ and 7′ and the counter 5 being formed from a continuous sheet of resilient material stretching across the bottom and extending forwardly to the toe, while the rear of the heel is closed by the inturned, overlapping flaps 11, 12.

The article may also be provided with a whole sole 13, as shown in Fig. 5 including a heel portion and extending forwardly over the relatively solid shank portion 3, which may be made of leather, and grooved at 14 to render it more flexible,—and forming the sole portion 15.

In Fig. 6 the form illustrated in Figs. 3 and 4 is shown in assembly with the shank and sole members of Fig. 5.

The toe member of the upper may be fashioned by molding a sheet of resilient, flexible material, such as transparent celluloid over the last which is to be tested and which may be of the usual type. The sole or shank member and the counter may likewise be shaped from celluloid or made from leather, etc., in the usual way. The counter may be made either by passing a strip around the heel of the last and in turning the lower edges 8 and 9 (as in Fig. 2) or by passing the sheet around and across the bottom and turning in the flaps 11, 12 around the heel and overlapping them (as in Fig. 3).

All of the overlapping surfaces may be cemented together by adhesive cements or by applying a solvent of the celluloid and pressing the moistened surfaces into intimate contact. Thus the shank member (3 or 3′) may be fastened to the counter 5, the counter 5 to the heel 4 and sole 13, and the toe member 1 to the sole 15.

The article as thus shaped and assembled may then be slipped upon the human foot which is to serve as a model. Deviations from an accurate fit (whether due to the form being too tight or too loose) may now be observed and noted. The toe member and the counter if of transparent material permit direct observation through the walls of these portions as contrasted with the overall dimensions only to which one is limited when trying on an opaque shoe of leather, for example.

The person may now bring his weight to bear upon the foot as thus encased in the shoe form, shift his weight, walk, etc., thus subjecting his foot to varying pressures and conformations. The corresponding distortions of the foot are observed in their relationship to the article and any necessary corrections to be made therein are noted.

If it is the last that is being tested, it will be remodelled or reshaped to such extent as the observations may indicate, and a second article made and tested in like manner. This is repeated until a correct adjustment of the last has been secured. In this way a new last and a new style of shoe may be scientifically developed, with the assurance that the style of shoe is correct and also that shoes made in accordance with the finished last will be comfortable to the wearer under all of the normal conditions of use. It especially insures proper allowance in the shape and proportions of the shoe, in respect of the relative positions of the toe, shank and heel of the finished shoe and of the last required to secure such proportions in the shoes to be made thereon.

When the pediform article used represents a standardized last (from which shoes are being made or are to be made in regular course of manufacture) it is only necessary to determine whether or not the shoe is of the right size and of the right style for the wearer's foot. The article immediately indicates whether the shoes made from such last will fit the wearer and whether they provide an accurate fit for the foot in the various posi-

tions which it assumes under different conditions, such as standing, walking, etc. In any case, it is certain that the shoes made upon the same last as the pediform article which is thus used as in the test will be satisfactory in every respect.

In this connection it may be observed that many people require a shoe which shall be especially adapted for long standing. Others need a shoe for walking, and still others for only occasional walking or standing. Again, it may be essential that the shoe selected shall be retained upon the foot in numerous unnatural positions, as when operating the brake and accelerator pedals of an automobile, when sitting upon a high stool, or in like positions. The appropriateness of the shoe under such conditions and the exact points at which it fails to meet them may be thus definitely ascertained by observation of the article on the wearer's foot and corrected in new styles or by selecting another style, as directed by previous observations.

In the correction of certain foot troubles it is desirable to have the foot under more or less constant observation, and the present invention is highly useful for such purposes. Thus, it provides for the construction of a shoe or other article of footwear which may in all substantial particulars follow the construction of usual shoes in respect to the material employed and the mode of assembling its parts, except that at selected portions the material employed is transparent so as to permit ready inspection of the adjacent parts of the foot without exposing them to the elements.

I claim:

1. A pediform article comprising a solid heel, a sole member extending forwardly from the heel, a counter having side walls, and a hollow toe member of resilient transparent material.

2. A pediform article comprising a solid heel, a sole member extending forwardly from the heel, a counter having side walls of resilient transparent material, and a hollow toe member.

3. A pediform article comprising a solid heel, a sole member extending forwardly from the heel, a counter having side walls of resilient transparent material, and a hollow toe member of resilient transparent material.

4. A pediform article including a shank or sole member, a counter, and a hollow toe member of resilient transparent material, said shank member being grooved to render the same flexible.

Signed by me at Auburn, New York, this 22nd day of February, 1929.

WILLIAM J. DE WITT.