Innovation, Sciences et Développement économique Canada
Office de la Propriété Intellectuelle du Canada

Innovation, Science and Economic Development Canada
Canadian Intellectual Property Office

CA 3147577 A1 2016/08/04

(21) 3 147 577

(12) DEMANDE DE BREVET CANADIEN
CANADIAN PATENT APPLICATION

(13) A1

(22) Date de dépôt/Filing Date: 2016/01/26

(41) Mise à la disp. pub./Open to Public Insp.: 2016/08/04

(62) Demande originale/Original Application: 3 080 383

(30) Priorité/Priority: 2015/01/26 (US62/107,565)

(51) Cl.Int./Int.Cl. *E04H 4/16* (2006.01), *B03B 5/34* (2006.01), *B04C 5/08* (2006.01)

(71) Demandeur/Applicant:
HAYWARD INDUSTRIES, INC., US

(72) Inventeurs/Inventors:
HAYES, GRAHAM M., US;
TEUSCHER, SCOTT, US;
MARCIANO, EDWARD LAWRENCE, US

(74) Agent: BORDEN LADNER GERVAIS LLP

(54) Titre : NETTOYEUR DE PISCINE AVEC SEPARATEUR DE PARTICULES HYDROCYCLONIQUE ET/OU SYSTEME D'ENTRAINEMENT A SIX ROULEAUX

(54) Title: SWIMMING POOL CLEANER WITH HYDROCYCLONIC PARTICLE SEPARATOR AND/OR SIX-ROLLER DRIVE SYSTEM

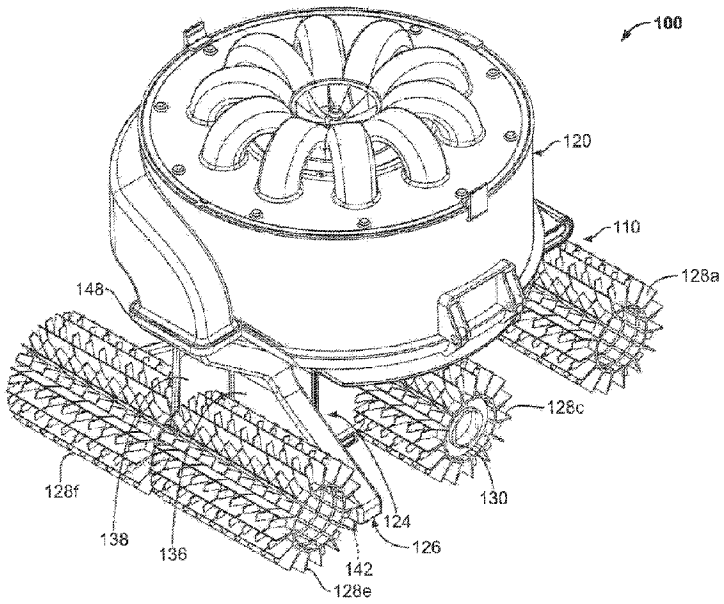

(57) Abrégé/Abstract:
Exemplary embodiments are directed to pool cleaners, generally including a canister body, a filtering medium assembly and a cyclone block. The canister body includes an inner chamber within inner walls of the canister body. The filtering medium assembly can be disposed within the inner chamber of the canister body. The cyclone block can be disposed within the inner chamber of the canister body and can be at least partially surrounded by the filtering medium assembly. The cyclone block includes a plurality of individual cyclone containers. A first cyclonic flow can be generated between the inner walls of the canister body and the filtering medium assembly. A second cyclonic flow can be generated within each of the plurality of cyclone containers.

ABSTRACT

Exemplary embodiments are directed to pool cleaners, generally including a canister body, a filtering medium assembly and a cyclone block. The canister body includes an inner chamber within inner walls of the canister body. The filtering medium assembly can be disposed within the inner chamber of the canister body. The cyclone block can be disposed within the inner chamber of the canister body and can be at least partially surrounded by the filtering medium assembly. The cyclone block includes a plurality of individual cyclone containers. A first cyclonic flow can be generated between the inner walls of the canister body and the filtering medium assembly. A second cyclonic flow can be generated within each of the plurality of cyclone containers.

SWIMMING POOL CLEANER WITH HYDROCYCLONIC PARTICLE SEPARATOR AND/OR SIX-ROLLER DRIVE SYSTEM

Cross-Reference to Related Applications

This application is a divisional application of Canadian Patent Application No. 3,080,383, which is a divisional of Canadian Patent Application No. 2,973,369 which is the national phase entry of PCT/US2016/014914 having an international filing date of January 26, 2016 and claims the benefit of United States Provisional Patent Application No. 62/107,565, filed on January 26, 2015.

Field of the Present Disclosure

Embodiments of the present disclosure relate to swimming pool cleaners and, more particularly, to automatic swimming pool cleaners movable along all pool surfaces including a pool waterline or water surface for purposes of cleaning debris therefrom, associated apparatus for separating debris from a fluid stream traveling through the swimming pool cleaner, and apparatus for facilitating maintenance of a swimming pool cleaner and associated apparatus.

Background of the Present Disclosure

Swimming pools commonly require a significant amount of maintenance. Beyond the treatment and filtration of pool water, the bottom wall (the "floor") and side walls of a pool (the floor and the side walls collectively, the "walls" of the pool) are scrubbed regularly. Additionally, leaves and other debris often times elude a pool filtration system and settle on the bottom of the pool, get stuck at the pool waterline, or float on the pool water surface.

Automated pool cleaning devices, e.g., swimming pool cleaners, have been developed to routinely navigate about the pool walls, cleaning as they go. A rotating cylindrical roller (formed of foam and/or provided with a brush) can be included on

the bottom of the pool cleaner to scrub the pool walls, while a pump system continuously circulates water through a filter assembly of the pool cleaner capturing debris and any suspended particulate therein. The pool cleaner lengthens the life of the main pool filter (e.g., a sand, diatomaceous earth (D.E.), or cartridge filter) in fluid communication with the fluid circulation line of the swimming pool, and reduces the time between changes or backwash cycles of the main filter.

The pool cleaner's filter assembly often includes traditional filter elements, such as bags, mesh, baskets, etc., that are utilized to trap any debris and particulate removed from a pool surface by the cleaner. These traditional filter elements generally have limited surface area that can quickly become clogged or occluded by the debris and particulate that they are utilized to contain. As the filter elements become clogged the cleaner can start to operate improperly, for example, the cleaner may lose suction performance. Once the filter elements have become sufficiently clogged, or have been occluded to a point that cleaner performance has been reduced below a desired level, the filter elements have to be cleaned or replaced. This can often occur prior to the debris retention area of a pool cleaner being completely full. That is, the surface of the bag, mesh, or basket can become clogged prior to the debris retention volume thereof being filled to capacity. Further, to rinse or replace the filter elements, or empty the basket, a user will often have to directly handle the filter element and subsequently debris, and in the case of a basket, will have to open a lid of the cleaner to retrieve the basket from within the unit and spray the basket with water which may result in debris and water getting on them.

During cleaning, the pool cleaner will traverse the pool surfaces brushing or scrubbing the debris therefrom, often encountering obstacles, such as lights, drains,

etc., along the way. These obstacles can cause the cleaner to get stuck for the duration of a cleaning period, resulting in the pool being only partially cleaned.

What is needed in the art is an automatic swimming pool cleaner that debris is easily cleaned from, enhances filtering operation, and/or traversal through the pool. These and other needs are addressed by the swimming pool cleaner of the present disclosure.

Summary of the Disclosure

Example embodiments of the present disclosure relate to swimming pool cleaners having improved filters and drive systems.

More particularly, an improved swimming pool cleaning is provided, according to the present disclosure. In some example embodiments, the swimming pool cleaner includes a hydrocyclonic particle separator assembly and/or a drive assembly having six driven brushed rollers.

In some example embodiments, the hydrocyclonic particle separator assembly is interconnected with an intake of the pool cleaner and generally includes a fluid turbine subassembly and a canister subassembly. For example, the canister subassembly is connectable with the intake of the pool cleaner and includes a canister body having a tangential outlet to an inner chamber thereof, a filtering medium (which can be, for example, a coarsely perforated surface or mesh), a fine debris container, one or more cyclone containers, and a central outlet in fluidic communication with the tangential outlet. Continuing with discussion of example embodiments, the filtering medium is positioned within the canister, the one or more cyclone containers are positioned within the filtering medium, and the fine debris container is positioned below the one more cyclone containers. The cyclone containers each include a body having a tangential inlet, a fine debris underflow

nozzle, and an overflow opening. The fluid turbine subassembly is positioned within the canister subassembly and configured to permit acceleration of fluid through the central outlet of the canister subassembly and pulling of fluid through the entirety of the canister subassembly and the intake. A motor housing includes a pump motor operatively connected to an impeller for same. Fluid being pulled through the canister subassembly and intake enters the canister body at the tangential inlet forming a cyclonic flow (e.g., a first cyclonic flow) about a first axis within the canister body and between the canister body and the filtering medium. The example first cyclonic flow includes debris-laden fluid having small and large debris, with the large debris being separated from the flow through cyclonic action and contact with the canister body and the filtering medium. The separated large debris falls to a lower portion of the canister body where it is retained. A portion of the first cyclonic flow is pulled across the filtering medium and into one or more cyclones containers. Continuing with discussions of some example embodiments, the fluid (e.g., the now once-filtered debris-laden fluid) enters the one or more cyclone containers at the respective tangential inlet, forming a cyclonic flow (e.g., a second cyclonic flow) about a second axis within each cyclone container. The second cyclonic flow includes once-filtered debris laden fluid having small debris that is separated from the fluid through contact with the cyclone container body. The debris separated in the cyclone container body falls through the underflow nozzle of each cyclone container where it is captured by the fine debris container. The fluid is then pulled out from the overflow opening of the one or more cyclone containers and ejected from the canister subassembly through the central outlet by the fluid turbine subassembly.

In some aspects of the present disclosure, the canister subassembly can include a vortex finder positioned within the overflow opening of each of the one or more cyclone containers that focuses slow-moving fluid so that it can be evacuated from each cyclone container.

In some aspects of the present disclosure, the cyclone container body can be tapered or include a tapered end that reduces the radius of the second cyclonic flow to separate decreasingly smaller particles therefrom.

The swimming pool cleaner can include a latch for removably retaining the hydrocyclonic particle separator in connection with the motor housing, and the hydrocyclonic particle separator can include a quick-release latch for allowing easy opening of the canister subassembly. The canister body can include a lower portion and an upper portion engaged by a hinge. The latch includes a resiliently-flexible body and a slanted head having an engagement surface, while the hydrocyclonic particle separator includes a locking interface configured to be engaged by the engagement surface of the latch. The quick-release latch can include a body having a shaped head including a latching surface at one end, a user-engageable tab at an opposite end of the shaped head, a spring, and a pivot positioned between the shaped head and the user-engageable tab. The quick-release latch is mounted to a bracket on the upper portion of the canister body by the pivot, with the spring between the user-engageable tab and the canister body. The spring biases the quick-release latch into a first latched position where the latching surface of the shaped head is adjacent and in engagement with a ridge that extends radially from the lower portion of the canister body, preventing the upper and lower portions of the canister body from being separated. Pressing the user-engageable tab compresses the spring and moves the quick-release latch into a second released position where

there is clearance between the latching surface of the shaped head and the ridge, allowing the upper and lower portions of the canister body to be separated through rotation about the hinge.

In some embodiments of the present disclosure, a pool cleaner is provided with six rollers for enhanced control when driven over surfaces, such as convex or concave surfaces with high local curvature, such as step edges, main drain covers, walls, and surfaces with low friction coefficients, for example. In preferred embodiments of the present disclosure, the motor housing, which can house a pump motor, houses a first drive motor and a second drive motor. In some embodiments, a first gear train operatively connects the first drive motor with a first roller set of three rollers, such that each one of the three rollers of the first roller set turn at the same rate as each other one thereof (first rate), and a second gear train operatively connects the second drive motor with a second set of three rollers, such that each one of the three rollers of the second roller set turn at the same rate as each other one thereof (the second rate). Depending upon the desired navigational outcome, for example, the first rate can be less than, greater than, and/or substantially equal to the second rate. Additionally and/or alternatively, the first set of rollers can rotate in a first direction, while the second roller set can rotate in a second direction opposite the first direction.

In accordance with embodiments of the present disclosure, an exemplary pool cleaner is provided that includes a canister body, a filtering medium assembly and a cyclone block. The canister body includes an inner chamber within inner walls of the canister body. The filtering medium assembly can be disposed within the inner chamber of the canister body. The cyclone block can be disposed within the inner chamber of the canister body. In some embodiments, the cyclone block can be at

least partially surrounded by the filtering medium assembly. The cyclone block includes a plurality of cyclone containers. A first cyclonic flow can be generated between the inner walls of the canister body and the filtering medium assembly. A second cyclonic flow can be generated within each of the plurality of cyclone containers.

In some embodiments, the canister body can define a cylindrical configuration. The canister body includes a tangential inlet. The filtering medium assembly includes a filtering medium support and a filtering medium. The filtering medium assembly can be configured and dimensioned to separate large debris particles from a fluid flow during the first cyclonic flow.

Each of the cyclone containers includes a cylindrical cyclone chamber with a tangential inlet and a debris underflow nozzle. The cyclone containers can be radially disposed around a central axis. In some embodiments, each of the cyclone containers includes a cylindrical top portion, a frustoconical bottom portion and a debris underflow nozzle at a distal end of the cyclone container. In some embodiments, the plurality of cyclone containers can include a first set of radially disposed cyclone containers and a second set of radially disposed cyclone containers positioned around the first set of radially disposed cyclone containers. Each of the plurality of cyclone containers can be configured and dimensioned to separate small debris particles from a fluid flow during the second cyclonic flow.

The pool cleaner includes a large debris container hingedly connected to a bottom edge of the canister body. The large debris container can include a dish including upwardly angled side walls. The pool cleaner includes a debris separator ring disposed between the filtering medium assembly and the large debris container.

The debris separator ring includes a mesh ring configured and dimensioned to maintain large debris particles within the large debris container.

The pool cleaner includes a fine debris container disposed within the inner chamber of the canister body. In some embodiments, the fine debris container can include a rounded dish including a central hub. In some embodiments, the fine debris container includes a dish and a central radial extension protruding from a bottom surface of the fine debris container. The central radial extension can define an inner chamber configured and dimensioned to maintain small debris particles separated from a fluid flow during the second cyclonic flow. The central radial extension can be disposed against the dish of the large debris container. The central radial extension can maintain a separation between the small debris particles within the inner chamber and large debris particles collected in the large debris container. The pool cleaner can include a gasket disposed between the dish of the large debris container and the central radial extension. The gasket can maintain separation between the small debris particles within the inner chamber and the large debris particles collected in the large debris container. Positioning the large debris container in an open position relative to the canister body simultaneously empties the large debris container and the inner chamber of the fine debris container, thereby simultaneously removing the large and small debris particles from the pool cleaner.

The pool cleaner can include a ring of vortex finders. Each of the vortex finders can be positioned within respective cyclone containers of the plurality of cyclone containers. The ring of vortex finders can include a central portion and a plurality of perimeter flaps Each of the perimeter flaps can include a vortex finder. In some embodiments, a top surface of the central portion can be recessed relative to

surfaces of the plurality of perimeter flaps. Each of the plurality of perimeter flaps can be hingedly connected to a polygonal perimeter of the central portion.

The pool cleaner includes a top cap disposed over the canister body. In some embodiments, the top cap includes a plurality of radially arched tubes defining a chamber extending to an outlet of the pool cleaner. In some embodiments, the top cap includes a plurality of rounded lobes defining a chamber extending to an outlet of the pool cleaner.

In some embodiments, the pool cleaner includes a drive assembly including one front roller, one rear roller, and two middle rollers. In some embodiments, the pool cleaner includes a drive assembly including two front rollers, two middle rollers, and two rear rollers.

In accordance with embodiments of the present disclosure, an exemplary pool cleaner is provided that includes a drive assembly, a motor housing and a hydrocyclonic particle separator assembly. In some embodiments, the drive assembly can include one single front roller, one single rear roller, a first middle roller and a second middle roller. The first and second middle rollers can be disposed adjacent to each other. The motor housing can be mounted relative to the drive assembly. The motor housing includes a first drive motor and a second drive motor. The hydrocyclonic particle separator assembly can be mounted to the motor housing. The first drive motor can drive rotation of the one single front roller and the first middle roller. The second drive motor can drive rotation of the one single rear roller and the second middle roller. The first drive motor can drive the one single front roller and the first middle roller at the same rate. The second drive motor can drive the one single rear roller and the second middle roller at the same rate.

In accordance with embodiments of the present disclosure, an exemplary pool cleaner is provided that includes a drive assembly, a motor housing and a hydrocyclonic particle separator. The drive assembly includes a first front roller, a second front roller, a first middle roller, a second middle roller, a first rear roller, and a second rear roller. The first and second front rollers can be disposed adjacent to each other. The first and second middle rollers can be disposed adjacent to each other. The first and second rear rollers can be disposed adjacent to each other. The motor housing can be mounted relative to the drive assembly. The motor housing includes a first drive motor and a second drive motor. The hydrocyclonic particle separator assembly can be mounted to the motor housing. The first drive motor can drive rotation of the first front roller, the first middle roller and the first rear roller. The second drive motor can drive rotation of the second front roller, the second middle roller and the second rear roller. The first drive motor can drive the first front roller, the first middle roller and the first rear roller at the same rate. The second drive motor can drive the second front roller, the second middle roller and the second rear roller at the same rate.

Additional features, functions and benefits of the disclosed swimming pool cleaner and methods in connection therewith will be apparent from the detailed description which follows, particularly when read in conjunction with the accompanying figures.

Brief Description of the Drawings

For a more complete understanding of the present disclosure, reference is made to the following detailed description of an exemplary embodiment considered in conjunction with the accompanying drawings, in which:

FIG. 1 is a rear perspective view of a first embodiment of a pool cleaner;

FIG. 2 is a rear perspective exploded view of the pool cleaner of FIG. 1 with a first embodiment of a canister subassembly of a hydrocyclonic particle separator assembly separated from a motor housing thereof;

FIG. 3 is a rear elevational view of the pool cleaner of FIG. 1;

FIG. 4 is a front elevational view of the pool cleaner of FIG. 1;

FIG. 5 is a right side elevational view of the pool cleaner of FIG. 1;

FIG. 6 is a left side elevational view of the pool cleaner of FIG. 1;

FIG. 7 is a top plan view of the pool cleaner of FIG. 1;

FIG. 8 is a bottom view of the pool cleaner of FIG. 1;

FIG. 9 is an exploded perspective view of the hydrocyclonic particle separator assembly of FIG. 2;

FIG. 10A is a sectional view of the pool cleaner taken along line 10A-10A of FIG. 7 showing, among other things, the chambers of the pool cleaner;

FIG. 10B is a sectional view of the pool cleaner taken along line 10B-10B of FIG. 7 showing, among other things, the flow paths of the pool cleaner;

FIG. 10C is a sectional view of the pool cleaner taken along line 10C-10C of FIG. 7 showing, among other things, the chambers and flow paths of the pool cleaner;

FIG. 11 is a sectional view of the pool cleaner taken along line 11-11 of FIG. 7;

FIG. 12 is a sectional view of the pool cleaner taken along line 12-12 of FIG. 3;

FIG. 13A is an enlarged view of the area 13A of FIG. 6 showing a first embodiment of a retention latch;

FIG. 13B is an enlarged view of the retention latch of FIG. 13A deformed by a force;

FIG. 14 is a partially exploded view of the cleaner of FIG. 1 showing removal of the canister subassembly from the motor housing;

FIG. 15A is an enlarged view of the area 15A of FIG. 11 showing a first embodiment of a quick-release latch;

FIG. 15B is an enlarged view of the quick-release latch of FIG. 15A deformed by a force;

FIG. 16 is front elevational view of a portion of the canister subassembly opened and debris being removed;

FIG. 17 is a perspective view of a second embodiment of a pool cleaner with gears thereof shown schematically distal of the motor housing;

FIG. 18 is a right side elevational view of the pool cleaner of FIG. 17;

FIG. 19 is a bottom view of the pool cleaner of FIG. 17;

FIG. 20 is a perspective view of a second embodiment of a hydrocyclonic particle separator assembly;

FIG. 21 is a top view of the hydrocyclonic particle separator assembly of FIG. 20;

FIG. 22 is a side view of the hydrocyclonic particle separator assembly of FIG. 20;

FIG. 23 is an exploded perspective view of the hydrocyclonic particle separator assembly of FIG. 20;

FIG. 24 is a partially exploded perspective view of the hydrocyclonic particle separator assembly of FIG. 20;

FIG. 25 is a sectional view of the hydrocyclonic particle separator assembly taken along line A-A of FIG. 21;

FIG. 26 is a sectional view of the hydrocyclonic particle separator assembly taken along line 26-26 of FIG. 25;

FIG. 27 is a sectional view of the hydrocyclonic particle separator assembly taken along line A-A of FIG. 21 with a canister bottom in a closed configuration;

FIG. 28 is a sectional view of the hydrocyclonic particle separator assembly taken along line A-A of FIG. 21 with the canister bottom in an open configuration;

FIG. 29 is a perspective view of a canister body of the hydrocyclonic particle separator assembly of FIG. 20;

FIG. 30 is a perspective view of a large debris container of the hydrocyclonic particle separator assembly of FIG. 20;

FIG. 31 is a top view of a gasket of the hydrocyclonic particle separator assembly of FIG. 20;

FIG. 32 is a sectional view of the gasket taken along line 32-32 of FIG. 31;

FIG. 33 is a side view of a fine debris container of the hydrocyclonic particle separator assembly of FIG. 20;

FIG. 34 is a sectional view of the fine debris container of FIG. 33;

FIG. 35 is a top view of a fine debris container top of the hydrocyclonic particle separator assembly of FIG. 20;

FIG. 36 is a sectional view of the fine debris container top taken along line 36-36 of FIG. 35;

FIG. 37 is a top view of a second gasket of the hydrocyclonic particle separator assembly of FIG. 20;

FIG. 38 is a perspective view of a cyclone block of the hydrocyclonic particle separator assembly of FIG. 20;

FIG. 39 is a top view of a cyclone block of the hydrocyclonic particle separator assembly of FIG. 20;

FIG. 40 is a sectional view of the cyclone block taken along line 40-40 of FIG. 39;

FIG. 41 is a perspective view of a ring of vortex finders of the hydrocyclonic particle separator assembly of FIG. 20;

FIG. 42 is a top view of a ring of vortex finders of the hydrocyclonic particle separator assembly of FIG. 20;

FIG. 43 is a sectional view of the ring of vortex finders taken along line 43-43 of FIG. 42;

FIG. 44 is a top view of a vortex finder gasket of the hydrocyclonic particle separator assembly of FIG. 20;

FIG. 45 is a perspective view of a second embodiment of a pool cleaner including a motor assembly and a drive assembly, an outer housing or skin of the pool cleaner having been removed for clarity;

FIG. 46 is a perspective exploded view of the pool cleaner of FIG. 45;

FIG. 47 is a top view of the pool cleaner of FIG. 45;

FIG. 48 is a side view of the pool cleaner of FIG. 45;

FIG. 49 is a bottom view of the pool cleaner of FIG. 45; and

FIG. 50 is a bottom view of a third embodiment of a pool cleaner including a motor assembly and a drive assembly, an outer housing or skin of the pool cleaner having been removed for clarity.

Detailed Description of the Present Disclosure

According to the present disclosure, advantageous apparatus are provided for facilitating maintenance of pool or spa, as well as for facilitating maintenance of a pool or spa cleaning device. More particularly, the present disclosure includes, but is not limited to, discussion of a pool cleaner including a hydrocyclonic particle separator assembly, a quick-release latch for the hydrocyclonic particle separator assembly, and a pool cleaner having six rollers.

With initial reference to FIGS. 1-8, a pool cleaner 100 generally includes a drive assembly 110 and a hydrocyclonic particle separator assembly 120 including a canister subassembly 121 and a fluid turbine subassembly 122 (see FIG. 2). In an exemplary embodiment, pool cleaner 100 is an electric pool cleaner that includes six rollers and hydrocyclonic particle separation capability. The motors can be powered by an electric cable (not shown) extending to a power source at the surface, a battery, and/or inductive coupling, for example. The drive assembly 110 includes a motor housing 124, an intake 126, and six brushed rollers 128a-128f. Two roller drives 130 (see FIGS. 1, 2, 5, and 6) extend from opposite sides of the motor housing 124. Each of the two roller drives 130 are respectively in operative communication with a first and second motor (not shown) positioned within the motor housing 124. A first roller set (rollers 128a, 128c, and 128e) is in mechanical communication with a first one of the roller drives 130 (e.g., on the left side of the cleaner), which is in communication with the first drive motor so each one of the rollers of the first roller set (e.g., roller 128a, 128c, and 128e) turn at the same first rate. A second roller set (rollers 128b, 128d, and 128f) is in mechanical communication with a second one of the roller drives 130 (e.g., on the right side of the cleaner), which is in communication with the second drive motor, so each one of

rollers of the second roller set (e.g., roller 128b, 128b, and 128f) turn at the same second rate.

A front support mount 132 extends from a front portion of the motor housing 124, and includes front roller mounts 134. Two of the brushed rollers 128e, 128f are connected with the front roller mounts 134, and are rotatable therewith. The intake 126 includes a body 136 having a rear support mount 138 extending therefrom. The intake 126 is interconnected with the motor housing 124 by an engagement means 139 (see FIG. 5). The engagement means 139 can be a mating connection, e.g., dovetail connection, between the intake 126 and the motor housing 124, a snap fit connection, or any other connection means known to one of ordinary skill in the art. The rear support mount 138 extends from the body 136 and includes rear roller mounts 140. Two of the brushed rollers 128a, 128b are connected with the rear roller mounts 140, and are rotatable therewith.

Although electric sources are contemplated, other power sources are also contemplated. For example, the power source can be positive water pressure, as in what is commonly referred to in the pool industry as a "pressure cleaner." As another example, the power source can be negative water pressure, as in what is commonly referred to in the pool industry as a "suction cleaner." Any power source and/or combinations thereof are contemplated.

The intake 126 further includes an inlet opening 142 (see FIG. 8) and an outlet opening 144 (see FIG. 2) defined by the body 136. A channel 146 extends between the inlet opening 142 and the outlet opening 144. A rim 148 extends about the perimeter of the outlet opening 144, and defines a channel 150 that cooperates with a portion of the hydrocyclonic particle separator assembly 120, discussed in greater detail below.

The motor housing 124 further includes a mounting boss 152 and a front latch 154, both extending from a top of the motor housing 124. As shown in FIG. 2, which is a partially exploded view of the cleaner 100, the fluid turbine subassembly 122 of the hydrocyclonic particle separator assembly 120 is mounted to the mounting boss 152 while the canister subassembly 121 is removable therefrom. The mounting boss 152 houses a third motor (not shown) that drives the fluid turbine subassembly 122. The front latch 154 is configured to releasably engage the canister subassembly 121 to secure the hydrocyclonic particle separator assembly 120 to the motor housing 124, this engagement is discussed in greater detail below in connection with FIGS. 13A and 13B.

FIG. 9 is an exploded perspective view of the hydrocyclonic particle separator assembly 120 of FIG. 2, including the canister subassembly 121 and the fluid turbine subassembly 122. The fluid turbine subassembly 122 includes an impeller 156, a grommet 158, a finger guard 160, and a diffuser 162. The impeller 156 includes a shaft 164 that extends through the grommet 158 and engages the third motor (not shown), which can be positioned within the mounting boss 152 of the motor housing 124. The finger guard 160 is mounted over the impeller 156, and diverts flow through the hydrocyclonic particle separator assembly 120, which is discussed in greater detail below in connection with FIGS. 10A, 10B, 11, and 12. The diffuser 162 is positioned over the finger guard 160 and utilized to normalize the flow generated by the impeller 156, which is driven by the third motor (not shown). The canister subassembly 121 includes a canister body 166 having a top 168 and a bottom 170, a fine debris container 172, a filtering medium 174 (e.g., a coarsely perforated mesh) mounted to a cyclone manifold 176, a ring of cyclone containers 178, and a top cap 180.

As referenced previously, the canister body 166 includes upper and lower portions 168, 170, which are engaged to one another by a hinge 182 and releasably secured to one another by a release means 184 (e.g., a quick-release latch 184) (see, e.g., FIG. 5). The canister body 166 generally defines an inner chamber 186, and includes a canister intake 188 generally positioned on the upper portion 168 of the canister body 166. The canister intake 188 includes an inlet 190, a tangential outlet 192, and a canister intake 194 extending between the inlet 190 and the tangential outlet 192. The tangential outlet 192 is positioned in a wall of the upper portion 168 of the canister body 166 and at a tangent to the canister body 166, such that fluid flowing through the canister intake channel 194 enters the inner chamber 186 of the canister body 166 at a tangent thereto. This configuration results in the generation of a cyclonic flow within the inner chamber 186 of the canister body 166, as fluid tangentially enters the inner chamber 186. The lower portion 170 of the canister body 166 includes a central aperture 196 encircled by a mounting ridge 198, the central aperture 196 receives the fluid turbine subassembly 122 and the mounting boss 152 of the motor housing 124. Accordingly, the fluid turbine subassembly 122 and the mounting boss 152 generally extend through the central aperture 196 and into the inner chamber 186 of the canister body 166.

The fine debris container 172 includes a central hub 200 surrounded by a dish 202 extending radially from the central hub 200. The dish 202 generally has an upwardly-curving shape such that it catches any debris that falls into the dish 202 and can form a static area where falling debris can land. The central hub 200 includes a top opening 204, a top mounting shoulder 205, and a bottom mount 206. A chamber 208 extends between the top opening 204 and the bottom mount 206. The chamber 208 is configured to receive the fluid turbine assembly 124 and the

mounting boss 152, which extend through the bottom mount 206 and into the chamber 208. The fine debris container 172 is positioned within the inner chamber 186 of the canister body 166 with the bottom mount 206 of the fine debris container 172 engaging the mounting ridge 198 of the canister body 166.

The cyclone manifold 176 includes a discoid body 210 connected with an upper mounting rim 212 and a lower rim 214 by a plurality of supports 216 and a flow director 218. The upper mounting rim 212, lower rim 214, and the plurality of supports 216 form a plurality of windows 220 that allow fluid to flow from the exterior of the cyclone manifold 176 to the interior thereof. The discoid body 210 includes a central opening 222, a plurality of cyclone container mounts 224, a mounting ring 226 about the central opening 222, and an annular sealing ring 227 about the periphery thereof. The cyclone manifold 176 is positioned over the fine debris container 172 with the mounting rim 226 of the discoid body 210 engaging the top mounting shoulder 205 of the fine debris container's central hub 200 and the annular sealing ring 227 encircling and in engagement with an upper portion of the dish 202. The filtering medium 174 is mounted to the cyclone manifold 176 and extends about the perimeter of the cyclone manifold 176 covering the plurality of windows 220. Accordingly, fluid flowing from the exterior of the cyclone manifold 176 to the interior flows across the filtering medium 174 and the windows 220. The filtering medium 174 is sized such that debris of a first size, e.g., larger debris, cannot pass through the filtering medium 174. Instead, the larger debris contacts the filtering medium 174, or the interior wall of the canister body 166, and is knocked down out of the fluid flow and does not enter the interior of the cyclone manifold 176.

The ring of cyclone containers 178 includes a plurality of individual cyclone containers 228, e.g., ten cyclone containers. It should be noted that for clarity of

FIG. 9 only four of the individual cyclone containers 228 are more fully labeled with reference numbers, but one of ordinary skill in the art shall understand that each individual cyclone container 228 can include the same parts and elements. Thus, it should be understood that the description of a single cyclone container 228 holds true for all of the cyclone containers 228 that make up the ring of cyclone containers 178. Each individual cyclone container 228 includes a circular and tapered cyclone container body 230 that defines a cyclone chamber 232 and includes an overflow opening 234, a debris underflow nozzle 236 (see FIG. 10B), and a tangential inlet 238 generally positioned on a radially inward portion of each individual cyclone container 228. Each individual cyclone container 228 also includes a mounting nozzle 240 surrounding the debris underflow nozzle 236 and configured to engage one of the plurality of cyclone container mounts 224 of the cyclone manifold 176. The cyclone manifold 176 can include the same number of cyclone container mounts 224 as there are individual cyclone containers 228. As such, the ring of cyclone containers 178 is positioned within the cyclone manifold 176 and within the filtering medium 174. When the ring of cyclone containers 178 is mounted to the cyclone manifold 176, each debris underflow nozzle 236 and mounting nozzle 240 is positioned within a respective cyclone container mount 224 wherein each extends through the respective cyclone container mount 224 and therefore through the discoid body 210 of the cyclone manifold 176. Accordingly, debris that falls out of the debris-laden water within each individual cyclone container 228, e.g., due to contact with the wall of the cyclone container body 230, can fall through the debris underflow nozzle 236 and into the dish 202 of the fine debris container 172, which is positioned below and adjacent the cyclone manifold 176.

The top cap 180 includes a top plate 242 and a plurality of arched tubes 244, e.g., ten. Each of the plurality of arched tubes 244 extends through the top plate 242 and arch from a radially outward portion of the top plate 242 to a radially central portion where they converge to form a first tubular wall 246 defining an outlet 248. One of ordinary skill in the art would appreciate that the plurality of arched tubes 244 can be replaced with a single open area that is not segmented by arched tubes. Reference is now made to FIG. 10A in further describing the top cap 180, which is a sectional view of the pool cleaner 100 taken along line 10A-10A of FIG. 7. As can be seen from FIG. 10A, each of the arched tubes 244 defines an inner chamber 245 and extends through the top plate 242 to form a vortex finder 250 having an opening 252 to the inner chamber 245. Each of the plurality of arched tubes 244 arches radially inward to converge and form the first tubular wall 246, and further converge to form a second tubular wall 254 that is spaced radially outward from, but concentric with, the first tubular wall 246, e.g., the second tubular wall 254 has a greater radius than the first tubular wall 246. The first and second tubular walls 246, 254 form a tubular chamber 256. The vortex finder opening 252 and the inner chamber 245 of each arched tube 244 is in fluidic communication with the tubular chamber 256, such that fluid can flow from each vortex finder opening 252, across each inner chamber 245, and into the tubular chamber 256 where the individual flows merge. The top cap 180 is placed over the cyclone manifold 176 and in engagement with the upper mounting rim 212 of the cyclone manifold 176 and the overflow opening 234 of each cyclone body 232. The top cap 180 can be secured to the cyclone manifold 176 by a plurality of screws or bolts 258. Additionally, the second tubular wall 254 includes a clasp 260 that releasably engages an upper mounting projection 262 of the fine debris container 172. When the top cap 180 is engaged with the cyclone manifold

176, the vortex finder 250 of each of the plurality of arched tubes 244 is inserted into the overflow opening 234 of a respective cyclone container 228 and positioned within the respective cyclone container body 230.

When the top cap 180 is mounted to the cyclone manifold 176, the tubular chamber 256 of the top cap 180 is positioned adjacent the finger guard 160 of the fluid turbine subassembly 122 so that the fluid flowing through the tubular chamber 256 is directed into the finger guard 160. As shown at least in FIG. 9, the finger guard 160 includes an inner cylindrical wall 264, an outer ring 266 surrounding the inner cylindrical wall 264 and concentric therewith, and a plurality of fins 268 extending between the outer ring 266 and the inner cylindrical wall 264. The finger guard 160 is generally positioned over the impeller 156 and the grommet 158 with the grommet 158 being inserted into the mounting boss 152 of the motor housing 124. The finger guard 160 is mounted to a flange 270 that extends radially from the mounting boss 152.

When the top cap 180, ring of cyclone containers 178, cyclone manifold 176, filtering medium 174, fine debris container 172, and canister body 166 are interconnected they are placed over the fluid turbine assembly 124 and the mounting boss 152 with the inner cylindrical wall 264 of the finger guard 160 abutting the first tubular wall 246 of the top cap 180. Additionally, the inlet 190 of the canister intake 188 is positioned adjacent the outlet opening 144 of the intake 126, with a sealing rim 272 extending radially from the inlet 190 engaged with the channel 150 that encircles the intake outlet 126.

Further, the canister subassembly 121 is secured to the motor housing 124 through the engagement of the front latch 154 with the canister body 166. Reference is made to FIGS. 13A and 13B in discussing this attachment, which are

enlarged view of the area 13A of FIG. 6 showing the front latch 154 in greater detail. Particularly, the canister body 166 includes a locking interface 276 between the upper and lower portions 168, 170 of the canister body 166. The locking interface 276 is generally an annular ring extending about the periphery of the canister body 166, and radially therefrom, that defines an upper ridge 278. The front latch 154 is generally a flag-shaped resiliently flexible member, e.g., a compliant mechanism or a spring-biased component. The front latch 154 includes a body 280 connected with the motor housing 124 and a slanted head 282 forming an engagement surface 284. When the canister subassembly 121 is placed over the mounting boss 152, a downward force thereon results in the locking interface 276 contacting the slanted head 282 of the front latch 154 and forcing the front latch 154 to slightly bend at the body 280 forcing the slanted head 282 forward. Once the canister subassembly 121 is forced completely down, so that the entirety of the locking interface 276 is lower than slanted head 282, the front latch 154 snaps back to its original up-right position and the canister subassembly 121 is removably "locked" in position. In this "locked" position, the engagement surface 284 of the front latch 154 is adjacent and engages the upper ridge 278 of the locking interface 276, such that an attempt to remove the canister subassembly 121 from the motor housing 124 is prevented through the engagement of the engagement surface 284 and the upper ridge 278. Accordingly, in the "locked" position, the canister subassembly 121 can not be removed from the motor housing 124 without first disengaging the front latch 154. To disengage the front latch 154, and, thus, to remove the canister subassembly 121, a user must bias the front latch 154 forward so that there is clearance between the engagement surface 284 and the upper ridge 278. Removal of the canister subassembly 121 from the motor housing 124 is shown in FIG. 13B, which is an enlarged view of the

retention latch of FIG. 13A deformed by a force F. As can be seen in FIG. 13B, to remove the canister subassembly 121, a user can exert a force F against the slanted head 282 of the front latch 154, forcing the slanted head 282 forward and bending the body 280. This results in the engagement surface 284 of the front latch 154 disengaging the upper ridge 278 of the locking interface 276, thus providing clearance therebetween and permitting the canister subassembly 121 to be removed from engagement with the motor housing 124.

The hydrocyclonic particle separator assembly 120 can include a plurality of sealing members 274, e.g., O-rings, disposed between adjacent parts to create a fluid-tight seal therebetween. For example, sealing members 274 can be positioned in the channel 150 of the intake 126, in the mounting ridge 198 of the canister body 166, between the annular sealing ring 227 of the cyclone manifold 176 and the dish 202 of the fine debris container 172, between the top plate 242 and the overflow opening 234 of each cyclone body 232, between the top plate 242 and the upper mounting rim 212 of the cyclone manifold 176, between the upper mounting rim 212 of the cyclone manifold 176 and the canister body 166, between the mounting flange 270 of the mounting boss 152 and the central hub 200 of the fine debris container 172, between the grommet 158 and the mounting boss 152, and within the locking interface 276. The sealing members 274 form a generally fluid-tight seal between the various components of the hydrocyclonic particle separator assembly 120 as well as between the hydrocyclonic particle separator assembly 120, the motor housing 124, and the intake 126.

When the hydrocyclonic particle separator assembly 120 is fully assembled and attached to the motor housing 124 and intake 126, a plurality of different chambers and flow paths are formed. FIG. 10A is a sectional view of the pool

cleaner taken along line 10A-10A of FIG. 7 showing, among other things, reference numbers for the chambers of the pool cleaner, FIG. 10B is a sectional view of the pool cleaner taken along line 10B-10B of FIG. 7 showing, among other things, reference numbers for the flow paths within the pool cleaner, and FIG. 10C is a sectional view of the pool cleaner taken along line 10C-10C of FIG. 7 showing, among other things, reference numbers for certain chambers and flow paths of the pool cleaner. A first chamber C1 is generally formed at the interior of the canister body 166 and as a portion of the inner chamber 186 of the canister body 166. The first chamber C1 is generally delineated as being between the inside of the canister body 166, the outside of the fine debris container 172, the outside of the cyclone manifold 176, and the outside of the filtering medium 174. The first chamber C1 receives debris-laden water having large and small debris contained therein. Flow of the debris-laden water within the first chamber C1 is discussed in greater detail below in connection with the flow paths through the cleaner 100. A second chamber C2 is generally formed at the interior of the cyclone manifold 176, and generally delineated as being between the inside of the filtering medium 174, the inside of the cyclone manifold 176, the outside of the second tubular wall 254 of the top cap 180, the bottom of the top plate 242 of the top cap 180, the central hub 200 of the fine debris container 172, and the exterior cyclone container body 230 of each individual cyclone container 228. The second chamber C2 receives once-filtered debris-laden water from the first chamber C1, e.g., water that has small debris contained therein with the large debris filtered out. A third chamber C3 is generally formed at the cyclone chamber 232 of each individual cyclone container 228. The third chamber C3 is generally delineated as being between the interior of a cyclone container body 230, a vortex finder 250, and the bottom of the top plate 242. As such, the third

chamber C3 is at least one third chamber C3 that is preferably comprised of a plurality of smaller, individual, radially-staggered chambers, e.g., each cyclone chamber 232 of each individual cyclone container 228, but for ease/clarity of description is referred to simply as a third chamber C3 and/or as at least one third chamber. The third chamber C3 receives the once-filtered debris-laden water from the second chamber C2. Flow of the once-filtered debris laden water is discussed in greater detail below. A fourth chamber C4 is generally formed at the interior of the dish 202 of the fine debris container 172, and generally delineated as being between the interior of the dish 202, the central hub 200, the bottom of the discoid body 210 of the cyclone manifold 176, the outlet nozzle of each individual cyclone container 228, and the mounting nozzle 240 of each individual cyclone container 228. The fourth chamber C4 is a static flow area that receives small debris that is separated out from the once-filtered debris-laden water that passes through the third chamber C3. The once-filtered debris-laden water is filtered a second time in the third chamber C3, where small debris "falls out" from the water and passes through the debris underflow nozzle 236 of each respective individual cyclone container 228 and into the fourth chamber C4. A fifth chamber C5 extends from the opening 252 of each vortex finder 250 to the central outlet 248 of the top cap 180. The fifth chamber C5 is generally delineated by the interior of the plurality of vortex finders 150, the inner chamber 245 of each of the plurality of arched tubes 244, the tubular chamber formed by the first and second tubular walls 246, 254, the finger guard 160, the mounting flange 270 of the mounting boss 152, the grommet 158, and the interior of the first tubular wall 246. Accordingly, the fifth chamber C5 is a serpentine-like chamber that originates at the opening 252 to each individual vortex finder 250 and extends to the central outlet 248 of the top cap 180, with the impeller 156, finger

guard 160, and diffuser 162 being positioned in the fifth chamber C5. The fifth chamber C5 receives twice-filtered water, e.g., water having minimal debris therein, from the third chamber C3, and expels the water from the central outlet 248.

Turning now to a description of the flow paths through the cleaner 100, FIGS. 10B, 10C, 11, and 12 are sectional views of the cleaner 100 that illustrate the flow paths therethrough. A first flow path F1 extends from the inlet opening 142 of the intake 126, across the channel 146, out the outlet opening 144, into the inlet 190 of the canister intake 188, across the canister intake channel 194, and out of the tangential outlet 192 where the fluid enters the canister body 166. Water flowing through the first flow path F1 is unfiltered water that is laden with large and small debris D_L, D_S.

The second flow path F2 starts at the end of the first flow path F1, e.g., at the tangential outlet 192, entering the inner chamber 186 of the canister body 166 at the tangential outlet 192. The second flow path F2 enters the inner chamber 186 at a tangent to the canister body 166, the inner chamber 186, and the first chamber C1 and is partially directed by the flow director 218 of the cyclone manifold 176 to flow along the inner wall of the canister body 166. The combination of the tangential entrance of the second flow path F2 and the flow director 218 results in the generation of a cyclonic/rotational flow within the first chamber C1 that circles about a central axis A1 of the hydrocyclonic particle separator assembly 120. The cyclonic flow of the second flow path F2 within the first chamber C1 results in large debris particles D_L, e.g., debris having an aggregate size (e.g., each dimension) of up to about 1.25 inches, for example, such as, sticks, leaves, grass, coarse sand, fine sand, stones, pebbles, insects, small animals, etc., striking the interior surface of the canister body 166 and the filtering medium 174 and losing velocity, resulting in the

large debris particles D_L falling to the bottom of the canister body 166 where they are collected and stored until the canister subassembly 121 is removed from the cleaner 100 and emptied.

A third flow path F3 extends radially inward from the second flow path F2, flowing across the filtering medium 174 and the windows 220 of the cyclone manifold 176 into the second chamber C2. Fluid and smaller debris D_S are contained in the third flow path F3, but the larger debris D_L has been separated out. Accordingly, the fluid in the third flow path F3 is once-filtered fluid. The third flow path F3 connects with a fourth flow path F4 at the tangential inlet 238 to each individual cyclone container 228.

The fourth flow path F4 enters each individual cyclone container 228 at the respective tangential inlet 238 where it proceeds to the respective cyclone chamber 232, e.g., third chamber C3. The placement of the individual cyclone container's tangential inlet 238, e.g., at a tangent to the respective cyclone chamber 232, results in the fourth flow path F4 being a cyclonic/rotational flow within each cyclone chamber 232 about a secondary axis A2 of each individual cyclone container 228. The fourth flow path F4 rotates within each individual cyclone container 228 to separate smaller debris D_S, e.g., debris having an aggregate size (e.g., each dimension) of up to about 0.080 inches, for example, such as, coarse sand, fine sand, silt, dirt, insects, etc., based on the ratio of the smaller debris' D_S centripetal force to fluid resistance from the fluid stream of the fourth flow path F4. More specifically, the fourth flow path F4 travels along the interior wall of the respective cyclone container body 230 and travels downward along the cyclone container body 230 toward the debris underflow nozzle 236 where the cyclone container body 230 beings to taper. As the fourth flow path F4 travels toward the tapered end of the

cyclone container body 230, the rotational radius of the fourth flow path F4 is reduced. As the rotational radius of the fourth flow path F4 is reduced, the larger and denser particles of the smaller debris particles D_S within the fourth flow path F4 have too much inertia to follow the continually reducing rotational radius of the fourth flow path F4 causing the smaller debris particles D_S to contact the cyclone container body 230 and fall to the bottom where the small debris particles D_S falls through the respective debris underflow nozzle 236 and into the fourth chamber C4 where it is collected and stored by the fine debris container 172 until the canister subassembly 121 is removed from the cleaner 100 and emptied. The fine debris container 172 can include holes or slots in the dish 202 thereof that allow the small debris particles D_S to fall into the lower portion 170 of the canister body 166 or fall out from the fine debris container 172 when the canister body 166 is opened. The result of the above description is that smaller and smaller debris is separated from the fluid flowing in the fourth flow path F4 as the fourth flow path F4 proceeds down the tapered portion of the cyclone container body 230 forming an inner vortex. Additionally, as the fluid within the fourth flow path F4 reaches the bottom of the tapered portion of the cyclone container body 230, and the inner vortex, it slows down causing the fluid therein to be pulled upward through the respective vortex finder 250 as twice-filtered fluid and enter the fifth chamber C5 where it merges with the fifth flow path F5.

The fifth flow path F5 connects with the fourth flow path F4 at the opening 252 to each vortex finder 250 where twice-filtered fluid enters the fifth chamber C5. The fifth flow path F5 extends from the opening 252 of each vortex finder 250, across each inner chamber 245, into and across the tubular chamber 256, across the plurality of fins 268 of the finger guard 160, underneath the inner cylindrical wall 264, through the center of the inner cylindrical wall 264, out from the finger guard 160,

through the diffuser 162, through the center of the first annular wall 246 of the top cap 180, and exits through the central outlet 248 of the top cap 180. That is, the fifth flow path F5 completely traverses the fifth chamber C5.

Accordingly, the larger cyclonic/rotational flow of the second flow path F2 flows about the central axis A1, while the smaller cyclonic/rotational flows of the fourth flow path F4 are formed and flow about the secondary axis A2 of each individual cyclone container 228, thus resulting in a plurality of smaller cyclonic/rotational flows within a larger cyclonic/rotational flow.

The flow of fluid through the cleaner 100, e.g., the five flow paths F1, F2, F3, F4, F5, is generated by the impeller 156 that is driven by the third motor (not shown) and positioned inline with the central outlet 248 of the top cap 180. The impeller 156 functions to discharge fluid through the central outlet 248 of the top cap 180, thus pulling fluid in reverse sequence through the cleaner 100. More specifically, the impeller 156 accelerates fluid through the central outlet 248 resulting in fluid being pulled sequentially through the fifth flow path F5, the fourth flow path F4, the third flow path F3, the second flow path F2, and then the first flow path F1 where the debris-laden fluid enters the cleaner 100 at the intake 126 through a suction effect generated at the inlet opening 142 of the intake 126.

As such, debris-laden fluid flowing through the cleaner 100 is filtered twice by particle separation due to the cyclones generated in the first chamber C1 and the third chamber C4. Utilizing the cyclonic flows within the cleaner 100 to separate the particles and drop the particles out of the flow path results in the retention of suction performance throughout the cleaner, as there is no opportunity for the debris particles to clog the filtering elements. This allows for optimum fluid flow performance through entire cleaning cycles, longer cleaner run times between debris

removal, and the collection of more debris before needing to empty the canister subassembly 121. As is known in the art, the outward flow of clean fluid results in an opposing force, which, as is also known in the art, can be relied upon in navigation of the pool cleaner for the purpose of forcing a pool cleaner downward against the floor when the pool cleaner is traversing the floor and sideways against a wall, when the pool cleaner is traversing a wall of the pool.

Turning now to the release means 184 for disengaging the upper and lower portions 168, 170 of the canister body 166 (e.g., quick-release latch), FIG. 15A is an enlarged view of the area 15A of FIG. 11 showing the quick-release latch 184 of the present disclosure in greater detail. The quick-release latch 184 includes a generally flag-shaped body 286 having a shaped head 288 at a first end and a user-engageable tab 290 at a second end opposite the first end, a pivot 292 disposed between the shaped head 288 and the user-engageable tab 290, and a spring 294 extending from the body 286. The spring 294 can be a resiliently flexible member integral with the body 286, e.g., a compliant mechanism, or it can be a torsion spring, compression spring, or any other spring mechanism known to one of skill in the art. The body 286 is mounted to a bracket 296 extending from the top portion 168 of the canister body 166 by the pivot 292 such that the body 286 is rotatable about the pivot 292. When the body 286 is interconnected with the bracket 296 the spring 294 is positioned between the body 286 and the canister body 166. The quick-release latch 184 is configured to engage a ridge 298 that extends radially outwardly from the lower portion 170 of the canister body 166. Particularly, the shaped head 288 includes a latching surface 300 that is configured to overlap the ridge 298 when the quick-release latch 184 is in a first position, e.g., a "locked" or "engaged" position. When in the first position, the spring 294 engages the canister body 166 biasing the

user-engageable tab 290 away from the canister body 166 and the shaped head 288 toward the canister body 166, e.g., the spring 294 biases the quick-release latch 184 rotationally about the pivot 292. In this first position, the latching surface 300 overlaps the ridge 298 preventing the upper portion 168 and the lower portion 170 of the canister body 166 from being separated. However, a user can apply a force in the direction of arrow F against the user-engageable tab 290 to place the quick-release latch 184 in a second position, e.g., an "unlocked" or "disengaged" position. FIG. 15B is an enlarged view of the quick-release latch 184 in the second position. As can be seen in FIG. 15B, as a force is applied to the user-engageable tab 290 in the direction of arrow F the spring 294 is compressed between the user-engageable tab 290 and the canister body 166, resulting in the user-engageable tab 290 moving toward the canister body 166 and the shaped head 288 away from the canister body 166 and the ridge 298. Movement of the shaped head 288 away from the canister body 166 and the ridge 298 results in clearance between the shaped head 288 (and the latching surface 300) and the ridge 298 so that the upper and lower portions 168, 170 of the canister body 166 can be rotated apart from one another about the hinge 182, as shown in FIG. 16, which is a front elevational view of the canister body 166 opened. Removing the force from the user-engageable tab 290 results in the spring 294 pushing the quick-release latch 184 back into the first position, e.g., the user-engageable tab 290 is rotated away from the canister body 166 and the shaped head 288 is rotated toward the canister body 166.

As can be seen in FIG. 16, when the quick-release latch 184 is moved into the second position, the lower portion 170 and the upper portion 168 of the canister body 166 are permitted to rotate away from one other about the hinge 182. Accordingly, as the lower portion 170 is rotated, any large and small debris D_L, D_S retained in the

lower portion 170 can fall out or be removed therefrom, and any small debris D_S retained by the fine debris container 172 can fall through the holes/slots thereof or be removed therefrom, as illustrated in FIG. 16. Additionally, the canister subassembly 121 is configured to retain water during cleaning, which can be swirled around the inside of the canister subassembly 121 during cleaning to ensure that all debris is in suspension and thus assist with flushing out the large and small debris D_L, D_S. This configuration allows a user to remove the debris D_L, D_S from the canister body 166 without having to touch the debris D_L, D_S.

One of ordinary skill in the art should appreciate that the release means 184 could be any suitable means for engaging the upper and lower portions 168, 170 of the canister body 166. For example, the release means 184 could be a mating component arrangement, a sliding spring latch, a rotatable spring latch, or any other known latching assemblies.

In operation, to empty the canister body 166 a user would first disconnect the canister subassembly 121 from the motor housing 124 by pressing forward against the front latch 154, as shown in FIG. 13B, to disengage the front latch 154 from the locking interface 276, and then removing the canister subassembly 121 from the motor housing 124 by pulling in the direction of arrows U shown in FIG. 14. Once removed, the user would then press the user-engageable tab 290 of the quick-release latch 184 in the direction of arrow F of FIG. 15A to disengage the shaped head 288 of the quick-release latch 184 from the ridge 298, as shown in FIG. 15B. Upon disengagement of the shaped head 288 from the ridge 298 the upper and lower portions 168, 170 of the canister body 166 are permitted to rotate away from one another about the hinge 182, thus opening the canister subassembly 121. The user would then further separate the upper and lower portions 168, 170, and turn the

lower portion 170 upside down allowing the large and small debris D_L and D_S to fall from the lower portion 170, and the small debris D_S to fall from the fine debris container 172, e.g., through the holes/slots thereof. To close the canister subassembly 121 a user would rotate the upper and lower portions 168, 170 toward one another about the hinge 182 until the ridge 298 engages the shaped head 288. Continued force by the user will cause for the ridge 298 to push the shaped head 288 away from the canister body 166, that is, the spring 294 will become compressed, until the canister body 166 is closed with the ridge 298 clearing the shaped head 288. Once the ridge 298 clears the shaped head 288, the shaped head 288 is biased by the spring 294 toward the canister body 166 placing the latching surface 300 adjacent the ridge 298 and thus locking the canister body 166. The user then places the canister subassembly 121 over the mounting boss 152 and aligns the inlet 190 of the canister intake 188 with outlet 144 of the intake 126. Next, the user exerts a downward force on the canister subassembly 121 so that the locking interface 276 contacts the slanted head 282 of the front latch 154 and forces the front latch 154 to slightly bend at the body 280 such that the slanted head 282 is forced forward. Once the canister subassembly 121 is forced completely down so that the entirety of the locking interface 276 is lower than slanted head 282, the front latch 154 snaps back to its original up-right position and the canister subassembly 121 is removably "locked" in position, as shown in FIG. 13B.

In other aspects of the present disclosure, the canister subassembly 121 can be provided with a handle to facilitate handling thereof by a user.

Further discussion shall now be had with respect to example embodiments of a drive system 110. As discussed above with reference to FIG. 2, for example, a first one of the drive rollers 130 is operatively connected to a first drive motor (not

shown) inside the motor housing 124 and a first roller set (rollers 128a, 128c, and 128e) for mechanical communication of the driving force thereto, and such that the rollers 128a, 128c, and 128e rotate at the same first rate. As also discussed above with reference to FIG. 2, for example, a second one of the drive rollers 130 is operatively connected to a second drive motor (not shown) inside the motor housing 124 and a second roller set (rollers 128b, 128d, and 128f) for mechanical communication of the driving force thereto, and such that the rollers 128b, 128d, and 128f rotate at the same second rate.

In the disclosure of the embodiments of FIGS. 1-16, gear trains can be provided that are not shown, but can be internal of the other components and/or positioned centrally proximal the ends of the rollers 128a-f that are proximate to the motor housing 124. For example, a first gear train can be provided for mechanical linkage and translation of drive from the first roller drive 130 to the rollers 128a, 128c, and 128e of the first roller set, and a second gear train can be provided for mechanical linkage and translation of drive from the second roller drive 130 to the rollers 128b, 128d, and 128f of the second roller set.

Referring to FIGS. 17-19, it is not required for the first gear train and/or the second gear train to be positioned internally of other components and/or to be positioned at ends of the rollers 128a-f that are proximate the motor housing 124. Indeed, as shown in FIGS. 17-19, an example first gear train 302 and an example second gear train 304 can be positioned external of other components and/or at ends of the rollers 128a-f that are distal the motor housing 125.

Although electric sources are contemplated, other power sources are also contemplated. For example, the power source can be positive water pressure, as in what is commonly referred to in the pool industry as a "pressure cleaner." As

another example, the power source can negative water pressure, as in what is commonly referred to in the pool industry as a "suction cleaner." Any power source and/or combinations thereof are contemplated.

The first rate and the second rate can be the same or different, depending on the circumstances. For example, where the cleaner desires to move in a straight trajectory, the first rate and the second rate may generally be the same, except whether the pool cleaner detects that other relevant parameters are unequal, such as uneven traction, in which case the first rate and the second rate may be different for a straight trajectory. Where it is desired for the pool cleaner to turn, for example, the first rate and the second rate may be different. Additionally and/or alternatively, the first set of rollers (rollers 128a, 128c, and 128e) can rotate in a first direction, while the second roller set (rollers 128b, 128d, and 128f) can rotate in a second direction opposite the first direction.

With reference to FIGS. 20-28, perspective, top, side, exploded and sectional views of a second embodiment of a hydrocyclonic particle separator assembly 400 are provided. It should be understood that the hydrocyclonic particle separator assembly 400 can be substantially similar in structure and function to the hydrocyclonic particle separator 120 and can be implemented with the pool cleaner 100 when suitable, as understood by one of ordinary skill in the art.

The hydrocyclonic particle separator assembly 400 includes a canister subassembly and a fluid turbine subassembly. In particular, the hydrocyclonic particle separator assembly 400 includes a diffuser 402 (e.g., a stator), a top cap 404, an impeller 406, an impeller skirt 408, an impeller retaining ring 466, a ring 410 of vortex finders 412, a vortex finder gasket 678, a shaft 414, and a ball bearing 416 disposed around the shaft 414. The hydrocyclonic particle separator assembly 400

further includes a cyclone block 418 with a plurality of circumferentially disposed cyclone containers 420, a first gasket 422, a second gasket 424, a filtering assembly 426 including a filtering medium support 428 and a filtering medium 430, and a fine debris container top 432, and a fine debris container 434. The hydrocyclonic particle separator assembly 400 further includes an O-ring 436, a debris separator ring 438, a canister body 440, a gasket 442, a large debris container 444 that defines the bottom of the hydrocyclonic particle separator assembly 400, and a gasket 468 disposed between the large debris container 444 and the fine debris container 434.

The canister body 440 includes an inlet 446 that tangentially introduces fluid into the hydrocyclonic particle separator assembly 400. The canister body 440 further includes a locking assembly 448, the locking assembly 448 including a snap plate 450 disposed on the canister body 440, a snap spring 452, a slide cover 454 and screws 456. The locking assembly 448 can interlock with a complementary extension 458 protruding from a top edge 460 of the large debris container 444. The large debris container 444 includes a hinge 462 connected to a complementary hinge at a bottom edge 464 of the canister body 440. The large debris container 444 can thereby pivot at the hinge 462 between an open and a closed position, and the locking assembly 448 can be used to lock the large debris container 444 relative to the canister body 440 to maintain the large debris container 444 in a closed position.

The impeller 406 can engaged with the shaft 414 such that rotation of the shaft 414 simultaneously rotates the impeller 406. The shaft 414 can engage the third motor (not shown), which can be positioned within the mounting boss 152 of the motor housing 124 (see, e.g., FIG. 2). The bottom edge 464 of the canister body 440 can be hingedly engaged with the large debris container 444 by the hinge 462 and releasably secured to each other by the locking assembly 448 (e.g., a quick-

release latch). The gasket 442 can separate the bottom edge 464 of the canister body 440 from the top edge 460 of the large debris container 444. With additional reference to FIG. 29, the canister body 440 generally defines an inner chamber 470 and includes the intake or inlet 446 positioned such that fluid is introduced tangentially into the inner chamber 470. In particular, the inlet 446 includes a tangential outlet 472 and an intake channel 474 extending between the inlet 446 and the tangential outlet 472. The tangential intake of fluid through the intake channel 474 results in the generation of a first cyclonic flow within the inner chamber 470. The canister body 440 defines a substantially cylindrical configuration with substantially similar top and bottom edge openings 476, 478. In some embodiments, the hydrocyclonic particle separator assembly 400 can include a check valve (not shown) for regulating the amount of fluid flow passing through the hydrocyclonic particle separator assembly 400. In some embodiments, the check valve can be disposed at or near the inlet 446 of the canister body 440.

With additional reference to FIG. 30, the large debris container 444 includes a central hub 480 surrounded by a dish 482 extending radially rom the central hub 480. In some embodiments, the dish 482 can have an upwardly-curving shape such that the dish 482 catches any debris that falls into the dish 482 and forms a static area where falling debris can land. In some embodiments, the dish 482 can include a substantially planar bottom surface with upwardly angled side walls 484. The central hub 480 includes a top opening 486 through which one end of the shaft 414 can pass to engage the third motor. In some embodiments, the bottom surface of the large debris container 444 can include a honeycomb pattern of ribs 488. The ribs 488 can reduce the overall weight of the large debris container 444 while

providing structural support. The entire volume of the dish 482 can be disposed below the canister body 440.

The gasket 442 separates the perimeter of the bottom edge 464 of the canister body 440 from the top edge 460 of the large debris container 444. With reference to FIGS. 31 and 32, the gasket 442 defines a substantially L-shaped cross-section including a vertical portion 498 extending perpendicularly from a horizontal portion 500. The proximal end of the horizontal portion 500 connects to the vertical portion 498 while an opposing distal end of the horizontal portion 500 includes a curved extension 502. The curved extension 502 bends downward and away from the vertical portion 498. The vertical portion 498 includes a perpendicular protrusion 504 extending from an inner surface 506. The horizontal portion 500 includes a perpendicular protrusion 508 extending from an inner surface 510. In some embodiments, the perpendicular protrusion 508 can be located at the distal end of the horizontal portion 500. The perpendicular protrusions 504, 508 form a channel 512 therebetween.

The channel 512 can be configured and dimensioned to receive the bottom edge 464 of the canister body 440. In some embodiments, the perpendicular protrusions 504, 508 create a friction fit between the gasket 442 and the canister body 440, thereby ensuring continued attachment of the gasket 442 relative to the canister body 440. The radius 514 of curvature of the curved extension 502 can be selected to be substantially complementary to the upwardly angled side walls 484 of the large debris container 444. Thus, when the large debris container 444 is positioned in a closed position, the gasket 442 can mate against the upwardly angled side walls 484 of the large debris container 444 to create a water-tight seal between the large debris container 444 and the canister body 440.

The debris separator ring 438 can be in the form of a cylindrical mesh ring including a central opening 490, and defining an outer circumferential edge 492 and an inner circumferential edge 494. The outer circumferential edge 492 can define a cross-sectional width dimensioned smaller than a cross-sectional width of the inner circumferential edge 494. In some embodiments, the cross-sectional width can gradually taper and increase in dimension from the outer circumferential edge 492 to the inner circumferential edge 494. A portion of the debris separator ring 438 extending radially from the outer circumferential edge 492 towards the inner circumferential edge 494 can include a plurality of radial apertures 496 (e.g., one or more rows of apertures 496) formed therein. In some embodiments, the apertures 496 can extend substantially halfway from the outer circumferential edge 492 to the inner circumferential edge 494.

In the assembled configuration of the hydrocyclonic particle separator assembly 400, the debris separator ring 438 can be disposed spaced upward relative to the bottom edge 464 of the canister body and, therefore, spaced upward relative to the large debris container 444 (see, e.g., FIG. 25). The diameter of the outer circumferential edge 492 of the debris separator ring 438 is dimensioned smaller than the diameter of the canister body 440 and the top edge 460 of the large debris container 444. Therefore, during cyclonic separation of the fluid, large debris can pass between the outer circumferential edge 438 and the inner surface of the canister body 440, and further can be collected in the large debris container 444. The apertures 496 in the debris separator ring 438 allow fluid to travel therethrough, thereby not completely isolating the large debris container 444 from the fluid flow, while preventing the large debris from being removed from the large debris container 444 by the fluid flow. In particular, the debris separator ring 438 acts as a barrier for

large debris, prevents the large debris collected in the large debris container 444 from reentering the fluid flow, and maintains the large debris collected in the large debris container 444.

With additional reference to FIGS. 33 and 34, side and sectional views of the fine debris container 434 are provided. The fine debris container 434 includes a dish 516 with an outer perimeter 518 and an inner perimeter 520, the surface of the dish 516 sloping downwardly towards a central vertical axis 522. The fine debris container 434 includes a central opening 524 formed at the inner perimeter 520. The central opening 524 extends through a central radial extension 526. The central opening 524 defines a first diameter 528 at or near a proximal end 530 of the central radial extension 526 and defines a second diameter 532 at a distal end 534 of the central radial extension 526. The radial wall of the central radial extension 526 can taper in the direction of the central vertical axis 522 such that the first diameter 528 is dimensioned greater than the second diameter 532. The tapered radial wall of the central radial extension 526 assists in transfer of fine debris from the dish 516 to an area near the distal end 534 of the central radial extension 526.

The fine debris container 434 includes a vertical circumferential flange 536 extending from the outer perimeter 518 of the dish 516. The vertical circumferential flange 536 includes a first horizontal lip 538 extending perpendicularly from a top surface 540 of the vertical circumferential flange 536. The vertical circumferential flange 536 includes a second horizontal lip 542 extending parallel to the first horizontal lip 538 and disposed between the first horizontal lip 538 and the outer perimeter 518. During assembly, the O-ring 436 can be positioned between the first and second horizontal lips 538, 542 to maintain a water-tight seal between the fine debris container 434 and the fine debris container top 432.

The inner surface 544 of the dish 516 includes a plurality of upwardly extending bulbs 546. The bulbs 546 can be radially formed on the inner surface 544. In some embodiments, the fine debris container 434 includes a first row of bulbs 546 radially disposed relative to the central vertical axis 522 near the outer perimeter 518 of the dish 516, and further includes a second row of bulbs 546 radially disposed relative to the central vertical axis 522 near the inner perimeter 520 of the dish 516. Each of the bulbs 546 near the outer perimeter 518 can define a first height relative to the inner surface 544, and each of the bulbs 546 near the inner perimeter 520 can define a second height relative to the inner surface 544, the first height being dimensioned smaller than the second height. Each of the bulbs 546 includes a radial wall 548, a top surface 550 and an opening 552 formed in the top surface 550. Each of the bulbs 546 further includes a cavity 554 formed within the radial wall 548 and connected with the opening 552, the cavity 554 extending to the outer surface 556 of dish 516.

With additional reference to FIGS. 35 and 36, top and sectional views of the fine debris container top 432 are provided. The fine debris container top 432 defines a substantially circular outer perimeter wall 558 and a central opening 560 formed in the top surface 562. The fine debris container top 432 includes a central radial extension 564 protruding from an inner surface 566 of the fine debris container top 432. The central radial extension 564 includes an interior cavity 568 that connects with the central opening 560. The radial wall of the central radial extension 564 can taper gradually such that the thickness of the radial wall is greater near the inner surface 566 than the thickness of the radial wall at a distal end 570 of the central radial extension 564.

The outer perimeter wall 558 can extend downwardly from the top surface 562 to form an enclosed cavity 572 between the outer perimeter wall 558 and the central radial extension 564. The top surface 562 includes a circumferential polygonal edge 574 from which a plurality of plates 576 extend. The plates 576 can be angled downwardly relative to a central portion 578 of the top surface 562 (and a central vertical axis 580) and form the perimeter of the fine debris container top 432. The central portion 578 of the top surface 562 includes a plurality of radial openings 582 formed therein and circumferentially disposed relative to the central vertical axis 580. Each of the plates 576 includes an opening 584 formed therein. The openings 582, 584 can be configured and dimensioned to receive the distal ends of the respective cyclone containers 420.

With reference to FIG. 25, during assembly, the central radial extension 564 of the fine debris container top 432 can be positioned concentrically within the central radial extension 526 of the fine debris container 434. The distal end 570 of the central radial extension 564 and the distal end 534 of the central radial extension 526 can be positioned against the gasket 468 of the large debris container 444 to create a water-tight seal therebetween. As will be discussed in greater detail below, fine debris filtered from the fluid flow during a second cyclonic filtering stage can be deposited in the cavity or chamber formed between the central radial extensions 526, 564 and the gasket 468.

As shown in FIG. 25, the gasket 468 can include first and second radial extensions 598, 600. The first radial extension 598 can seal against the distal end 570 of the central radial extension 564 of the fine debris container top 432. The second radial extension 600 can be positioned against the central hub 480 of the large debris container 444 and seals against the distal end 534 of the central radial

extension 526 of the fine debris container 434. The gasket 468 further includes a lower hook section 602 that fits within and hooks around the edge of the top opening 486 of the central hub 480, thereby fixating the gasket 468 to the central hub 480. The gasket 468 thereby forms a water-tight seal between the large debris container 444, the fine debris container 434 and the fine debris container top 432.

It should be understood that when the large debris container 444 is unlatched from the canister body 440 and is in the open position, large debris from the large debris container 444 and fine debris from the cavity or chamber formed between the central radial extensions 526, 564 can be simultaneously emptied. In particular, opening the large debris container 444 releases the seal formed between the gasket 468 and the distal ends 534, 570 of the central radial extensions 526, 564, allowing the fine debris to be simultaneously emptied from the canister body 440.

With additional reference to FIG. 37, a top view of the second gasket 424 is provided. The second gasket 424 can be disposed over the fine debris container top 432. The gasket body 604 of the second gasket 424 can define a substantially planar and disc-like configuration. The gasket body 604 includes a central opening 606, a first set of radial openings 608 spaced from a perimeter edge 610, and a second set of radial openings 612 between the central opening 606 and the first set of radial openings 608. The position of the first and second set of radial openings 608, 612 can correspond to the position of the radial openings 582, 584 of the fine debris container top 432. Each of the openings 608, 612 of the first and second set of radial openings 608, 612 includes a smaller sized opening 614 formed adjacent thereto. In some embodiments, the gasket body 604 can include one or more radial slots 616 aligned with corresponding openings 608 of the first set of radial openings 608.

As noted above, the filtering assembly 426 includes the filtering medium support 428 and the filtering medium 430. The filtering medium support 428 includes a support body 586 defining a frustoconical configuration. The support body 586 includes a top circumferential frame 588 and a bottom circumferential frame 590. A diameter of the top circumferential frame 588 can be dimensioned greater than a diameter of the bottom circumferential frame 590. The support body 586 further includes a plurality of windows 592 formed between the top and bottom circumferential frames 588, 590. In some embodiments, the windows 592 can be dimensioned substantially similarly relative to each other. In some embodiments, one section of the support body 586 can include a plurality of vertical slit windows 594 that are dimensioned smaller than the windows 592. During assembly, the vertical slit windows 594 can be positioned to face the tangential outlet 472 of the canister body 440. The vertical slit windows 594 provide structural support to the filtering assembly 426 against fluid flow entering the canister body 440 through the tangential outlet 472. In some embodiments, the support body 586 can include a circumferential wall 596 extending downwardly from the bottom circumferential frame 590. The diameter of the circumferential wall 596 can be dimensioned such that during assembly, the circumferential wall 596 mates with the debris separator ring 438.

The filtering medium 430 (e.g., a mesh, filter, polymesh, or the like) can be received by the support body 586 such that the filtering medium 430 covers each of the windows 492 and the vertical slit windows 594. In particular, the filtering medium 430 extends the perimeter wall of the filtering assembly 426. As will be discussed in greater detail below, in a first cyclonic separation stage, the filtering assembly 426 can filter out a first debris size, e.g., large debris, from the fluid flow with the large

debris dropping into the large debris container 444. In particular, the large debris contacts the filtering medium 430, or the interior wall of the canister body 440, and is knocked down out of the fluid flow and does not enter the interior of the filtering assembly 426. The fluid flow with at least some fine debris can continue through the filtering assembly 426 and into the cyclone block 418.

With additional reference to FIGS. 38-40, the cyclone block 418 includes a cyclone block body 618 in the form of a cylindrical disc with a central opening 620 formed in the cyclone block body 618. The first gasket 422 can be disposed within grooves on an outer surface of the cyclone block body 618. In some embodiments, the first gasket 422 can define a U-shaped cross-section. The cyclone block body 618 includes a plurality of individual cyclone containers 420 radially disposed relative to a central vertical axis 622. In particular, the cyclone block 418 includes a first set of cyclone containers 624 radially disposed around the central opening 620 and a second set of cyclone containers 626 radially disposed around the first set of cyclone containers 624.

Each of the cyclone containers 420 of the first set of cyclone containers 624 can extend substantially parallel to the central vertical axis 622. Each of the cyclone containers 420 of the second set of cyclone containers 626 can extend in an angled manner relative to the central vertical axis 622 (e.g., angled with a bottom of the cyclone container 626 in the direction of the central vertical axis 622). In particular, a central axis A1 of each of the cyclone containers 420 of the first set of cyclone containers 624 can be substantially parallel to the central vertical axis 622, while a central axis A2 of each of the cyclone containers 420 of the second set of cyclone containers 626 can be angled relative to the central vertical axis 622. In particular, a cylindrical top portion 638 of each of the second set of cyclone containers 626 can

be disposed further from the central vertical axis 622 than a debris underflow nozzle 634.

It should be understood that the description of a single cyclone container 420 holds true for all of the cyclone containers 420 that make up the ring of cyclone containers 420 (i.e., the cyclone block 418), unless noted otherwise. Each cyclone container 420 includes a circular tapered container body 628 that defines a cyclone chamber 630 and includes an overflow opening 632, a debris underflow nozzle 634, and a tangential inlet 636 generally positioned on a radially inward portion of each cyclone container 420. Each cyclone container 420 generally includes a cylindrical top portion 638 and a frustoconical bottom portion 640 that tapers downward to the debris underflow nozzle 634. The frustoconical bottom portion 640 aids in maintaining a centrifugal acceleration of the fluid flow as the fluid travels downward along the interior of the frustoconical bottom portion 640 in the direction of the debris underflow nozzle 634. In some embodiments, the tangential inlet 636 of every other cyclone container 420 of the second set of cyclone containers 626 can be in fluid communication with the tangential inlet 636 of a respective cyclone container 420 of the first set of cyclone containers 624 via a passage 642. As will be discussed in greater detail below, fluid passing through the filtering assembly 426 enters the inner chamber 470 of the canister body 440 around the frustoconical bottom portions 640 of the cyclone containers 420 and travels upward into the respective tangential inlets 636 of the cyclone containers 420. Therefore, fluid enters each of the cyclone chambers 630 of the first and second set of cyclone containers 624, 626 substantially simultaneously and forms individual cyclones within the cyclone containers 420. A concentric, dual-cyclone configuration within the cyclone block 418 is thereby formed.

Each of the frustoconical bottom portions 640 can be configured and dimensioned to be partially received within the radial openings 582, 584 of the fine debris container top 432 such that fine debris filtered by the cyclone containers 420 falls through the debris underflow nozzle 634 and into the fine debris container 434. Thus, the fine debris container top 432 maintains the debris underflow nozzles 634 suspended over or spaced from the dish 516 of the fine debris container 434. Accordingly, debris falls out of the debris-laden water within each individual cyclone container 420, e.g., due to contact with the wall of the cyclone container body 628, and falls through the debris underflow nozzle 634 and into the fine debris container 434. During assembly, as shown in FIG. 25, the frustoconical bottom portions 640 of the cyclone containers 420 are positioned within and surrounded by the filtering assembly 426. Thus, the hydrocyclonic particle separator assembly 400 includes a dual cyclone system with the first cyclone occurring between the canister body 440 and the filtering assembly 426, and the second cyclones occurring in each of the cyclone containers 420.

The shaft 414 includes a proximal end 642 and a distal end 644. The proximal end 642 can include a tip 646 configured to mate with a complementary opening 648 of the impeller 406. Thus, rotation of the shaft 414 simultaneously drives rotation of the impeller 406. The tip 646 allows the impeller 406 to be removably attached to the shaft 414. The distal end 644 includes a female member 650 configured to mate with a male member of the third motor (e.g., a spline coupling, or the like). The third motor can thereby drive rotation of the shaft 414. The shaft 414 can pass through the central openings of the components of the hydrocyclonic particle separator assembly 400 with the distal end 644 being positioned over the central hub 480 of the large debris container 444. The male

member of the third motor can pass through the opening 468 of the central hub 480 and engages the female member 650 to rotate the shaft 414 within the hydrocyclonic particle separator assembly 400.

With additional reference to FIGS. 41-43, perspective, top and sectional views of the ring 410 of vortex finders 412 are provided. The ring 410 includes a ring body 652 with a central portion 654 with a polygonal perimeter 656, and a plurality of perimeter flaps 658 extending from the polygonal perimeter 656. The central portion 654 can be recessed relative to the perimeter flaps 658, with respective angled wall sections 660 connecting the central portion 654 to the perimeter flaps 658.

The ring body 652 includes a central opening 662, a first set of vortex finders 664 radially disposed around the central opening 662, and a second set of vortex finders 666 radially disposed around the first set of vortex finders 664. The central opening 662 can be formed in a central hub 668 that is raised relative to the recessed central portion 654. Each of the vortex finders 412 of the first set of vortex finders 664 can extend substantially parallel to a central vertical axis 670. Each of the vortex finders 412 of the second set of vortex finders 666 can be angled relative to the central vertical axis 670. In particular, the angle of the second set of vortex finders 666 can be substantially equal to the angle of the cyclone containers 420 of the second set of cyclone containers 626. In some embodiments, the perimeter flaps 658 can be hingedly connected to the angled wall sections 660 such that the angle of each vortex finder 412 can be individually adjusted relative to the central vertical axis 670. During assembly, the vortex finders 412 of the first set of vortex finders 664 can be positioned at least partially into the cyclone containers 420 of the first set of cyclone containers 624, and the vortex finders 412 of the second set of

vortex finders 666 can be positioned at least partially into the cyclone containers 420 of the second set of cyclone containers 626.

Each of the vortex finders 412 includes a planar top surface 672 and a cylindrical extension 674 protruding downwardly from the planar top surface 672. Each cylindrical extension 674 includes a uniform channel 676 passing therethrough. When positioned within the respective cyclone containers 420, the vortex finders 412 assist in generating a vortex within the cyclone containers 420 such that debris of a second size (e.g., fine debris) hits the inner walls of the cyclone container 420 and travels downwardly through the frustoconical bottom portion 640, through the debris underflow nozzle 634 and into the fine debris container 434.

With additional reference to FIG. 44, a top view of the vortex finder gasket 678 is provided. The vortex finder gasket 678 can be substantially disc-shaped and includes a gasket body 680. The gasket body 680 includes a central opening 682, a first set of openings 684 radially disposed around the central opening 682, and a second set of openings 686 radially disposed around the first set of openings 684. The positions of the first and second set of openings 684 can correspond to the vortex finders 412 of the ring 410. During assembly, the respective vortex finders 412 can be inserted through the openings 684, 686 such that the vortex finder gasket 678 is disposed against the bottom surface of the ring body 652. The gasket body 680 includes a plurality of radial protrusions 688 adjacent to the second set of openings 684 that substantially match the configuration of the top surface 672 of the second set of vortex finders 666. The radial protrusions 688 define the perimeter edge of the vortex finder gasket 678.

The top cap 404 includes a top plate 690 with a plurality of rounded lobes 692 extending from the perimeter of the top plate 690. The number of rounded lobes 692

can equal the number of cyclone containers 420 in the second set of cyclone containers 624 and the number of vortex finders 412 in the second set of vortex finders 666. Each of the rounded lobes 692 extends through the top plate 690 and converges at a central cavity 694 within the top cap 404. The cavity 694 forms a tubular wall 696 defining an outlet 698 of the top cap 404. The tubular wall 696 can extend upwardly relative to the surface of the top plate 690. The diffuser 402 can be positioned over the outlet 698 to promote suction of fluid out of the cavity 694. In some embodiments, the top cap 404 can include a handle 405 extending from the top cap 404 to allow for removal of the hydrocyclonic particle separator assembly 400 from the motor housing (see, e.g., FIGS. 27 and 28). In particular, a user can grasp the handle 405 to disengage the hydrocyclonic particle separator assembly 400 from the motor housing.

When assembled, each of the rounded lobes 692 is positioned over the respective vortex finder 412 and cyclone container 420 such that fluid can exit the cyclone container 420 through the respective vortex finder 412, travels into the cavity 694, and out of the outlet 698. Thus, individual fluid cyclonic flows within the cyclone block 418 can merge within the cavity 694 prior to being expelled from the outlet 698. The top cap 404 can be secured to the cyclone block 418 by a plurality of screws or bolts. A plurality of screws of bolts can similarly be used to secure the fine debris container top 432, the fine debris container 434 and the canister body 440. The large debris container 444 can be placed in a closed position by positioning the large debris container 444 against the gasket 442, and the extension 458 of the large debris container 444 can be engaged with the locking assembly 448. In particular, the extension 458 can be flexed outwardly to position the large debris container 444 against the gasket 442, and released to allow a curved hook of the extension 458 to

engage a protrusion of the locking assembly 448. The slide cover 454 can be positioned over the snap plate 450 to maintain engagement of the extension 458 with the locking assembly 448.

With reference to FIGS. 45-49, perspective, top, side and bottom views of a second embodiment of an exemplary pool cleaner 700 are provided. The pool cleaner 700 includes an outer housing or skin (not shown) in which one or more components of the pool cleaner 700 can be enclosed. The pool cleaner 700 can be implemented with the hydrocyclonic particle separator assembly 400 discussed above. The pool cleaner 700 generally includes a drive assembly 702 and a motor assembly 704. In an exemplary embodiment, the pool leaner 700 is an electric pool cleaner that includes six rollers and the hydrocyclonic particle separator assembly 400. The motor assembly 704 can be powered by an electric cable (not shown) extending to a power source at the surface of the swimming pool, a battery and/or inductive coupling, for example.

The drive assembly 702 includes a motor housing 706, an intake 708, six brushed rollers 710a-f, a first roller drive 712 and a second roller drive 714. The first and second roller drives 712, 714 are positioned on opposite sides of the motor housing 706. Each of the roller drives 712, 714 is respectively in operative communication with a first and second motor (not shown) positioned within the motor housing 706. A first roller set (rollers 710a, 710c, 710e) is in mechanical communication with the first roller drive 712, which is in communication with the first drive motor so that each of the rollers of the first roller set (e.g., rollers 710a, 710c, 710e) turn in the same direction and independently from a second roller set (rollers 710b, 710d, 710f). In some embodiments, each of the rollers of the first roller set (rollers 710a, 710c, 710e) can be independently spun relative to each other. The

second roller set (rollers 710b, 710d, 710f) is in mechanical communication with the second roller drive 714, which is in communication with the second drive motor, so each of the rollers of the second roller set (e.g., rollers 710b, 710d, 710f) turn in the same direction and independently from the first roller set (rollers 710a, 710c, 710e). In some embodiments, the rollers of the first roller set can turn at the same rate, and the rollers of the second roller set can turn at the same rate. For purposes of turning the pool cleaner 700, the first set of rollers can be driven to turn in a single direction and the second set of rollers can be driven to turn in an opposing direction, thereby generating a moment for turning the pool cleaner 700. Each of the rollers 710a-f can be mounted to roller mounts 716a-d of the motor housing 706. Each of the roller drives 712, 714 includes a first drive train 734, 736 disposed underneath the motor housing 706 and a second drive train 738, 740 disposed on the respective sides of the frame of the pool cleaner 700. In some embodiments, one or more split bearings 739 can be used in combination with the first and second drive trains 734, 736, 738, 740.

The intake 708 includes a body 718 extending the width of the pool cleaner 700 between the rollers 710 c, d and the rollers 710 e, f. The intake 708 includes an inlet opening 720 and an outlet opening 722 defined by the body 718. A channel 724 extends between the inlet opening 720 and the outlet opening 722. A rim 726 extends about the perimeter of the outlet opening 722 and is configured and dimensioned to cooperate with inlet 446 of the canister body 440.

The motor housing 706 includes a motor shaft 728 with a male member 730 that engages the female member 650 of the shaft 414. In particular, the hydrocyclonic particle separator assembly 400 can be mounted over the male member 730 of the motor shaft 728 such that engagement between the motor shaft

728 and the shaft 414 occurs. The motor shaft 728 can thereby drive the hydrocyclonic particle separator assembly 400. A locking interface 732 on the motor housing 706 can detachably interlock relative to a bottom surface of the large debris container 444 to interlock the hydrocyclonic particle separator assembly 400 with the motor housing 706. For example, the bottom surface of the large debris container 444 can include a concave portion 445 configured and dimensioned to receive the locking interface 732 of the motor housing 706.

With reference to FIG. 50, a bottom view of a third embodiment of an exemplary pool cleaner 742 is provided. The pool cleaner 742 includes an outer housing or skin (not shown) in which one or more components of the pool cleaner 742 can be enclosed. The pool cleaner 742 can be substantially similar in structure and function to the pool cleaner 742, except for the distinctions noted herein. Therefore, like reference numbers are used for like structures. In particular, rather than including six rollers 710a-f, the pool cleaner 742 includes four brushed rollers 744a-d. Specifically, the pool cleaner 742 includes a single front roller 744a and a single rear roller 744d. The pool cleaner 742 includes a first roller drive 746 and a second roller drive 748 positioned on opposite sides of the motor housing 706. Each of the roller drives 746, 748 is in operative communication with respective first and second motors (not shown) positioned within the motor housing 706.

A first roller set (rollers 744a, 744b) is in mechanical communication with the first roller drive 746, which is in communication with the first drive motor so that each of the rollers of the first roller set (e.g., rollers 744a, 744b) turn in the same direction and independently from a second roller set (rollers 744c, 744d). In some embodiments, each of the rollers of the first roller set (744a, 744b) can be independently spun relative to each other. The second roller set (rollers 744c, 744d)

is in mechanical communication with the second roller drive 748, which is in communication with the second drive motor, so each of the rollers of the second roller set (e.g., 744c, 744d) turn in the same direction and independently from the first roller set (744a, 744b). In some embodiments, the rollers of the first roller set can turn at the same rate, and the rollers of the second roller set can turn at the same rate.

During operation, turning capability can be provided by the moment created by the middle split rollers 744b, 744c. In particular, rotation of the rollers 744b, 744c in their opposing respective directions creates a moment for rotating the pool cleaner 742. Each of the rollers 744a-d can be mounted to roller mounts 750a-d of the motor housing 706. Each of the roller drives 746, 748 includes a first drive train 734, 736 disposed underneath the motor housing 706 and a second drive train 752, 754 disposed on the respective sides of the frame of the pool cleaner 742.

When the hydrocyclonic particle separator assembly 400 is fully assembled and attached to the motor housing 706 and intake 708, a plurality of different chambers and flow paths are formed. FIG. 25 is a sectional view of the hydrocyclonic particle separator assembly 400 showing, among other things, reference numbers for the chambers and flow paths within the pool cleaner.

A first chamber C1 is generally formed at the interior of the canister body 440 and as a portion of the inner chamber 470 of the canister body 440. The first chamber C1 is generally delineated as being between the inside of the canister body 440, the outside of the filtering assembly 426, and the outside of the fine debris container 434. The first chamber C1 receives debris-laden water having large and small debris contained therein. Flow of the debris-laden water within the first chamber C1 is discussed in greater detail below. A second chamber C2 is generally

formed at the interior of the large debris container 444. The second chamber C2 receives and retains large debris filtered from the water. The third chamber C3 is generally formed between the outer surfaces of the cyclone containers 420 of the cyclone block 418, and is generally delineated as being between the inside of the filtering assembly 426, the outer surfaces of the cyclone containers 420, the ring body 652 of the ring 410 of vortex finders 412, and the fine debris container top 432. The third chamber C3 receives once-filtered debris-laden water from the first chamber C1, e.g., water that has small debris contained therein with the large debris filtered out and retained in the second chamber C2.

Fourth and fifth chambers C4, C5 are generally formed within each of the cyclone containers 420 of the first and second set of cyclone containers 624, 626. In particular, the fourth chamber C4 is formed within the cyclone containers 420 of the second set of cyclone containers 626 and the fifth chamber C4 is formed within the cyclone containers 420 of the first set of cyclone containers 624. As will be discussed in greater detail below, once-filtered debris-laden water can enter the fourth and fifth chambers C4, C5 substantially simultaneously. The fourth and fifth chambers C4, C5 are generally delineated as being within the inner chambers 470 of the cyclone containers 420 between the interior of a cyclone container 440 and a vortex finder 412. The fourth and fifth chambers C4, C5 receive the once-filtered debris-laden water from the third chamber C3.

A sixth chamber C6 is generally formed at the interior of the fine debris container 434, and is generally delineated as being between the central radial extension 526 of the fine debris container 434, the central radial extension 564 of the fine debris container top 432, and the gasket 468. The sixth chamber C6 is a static flow area that receives small debris that is separated out from the once-filtered

debris-laden water that passes through the fourth and fifth chambers C4, C5. The once-filtered debris-laden water is filtered a second time in the fourth and fifth chambers C4, C5, where small debris "falls out" from the water and passes through the debris underflow nozzles 634 of each respective individual cyclone container 420 and into the sixth chamber C6.

The seventh chamber C7 extends from the uniform channel 676 of each vortex finder 412 to the central outlet 698 of the top cap 404. The seventh chamber C7 is generally delineated by the interior of the plurality of vortex finders 412, the interior chamber of each rounded lobe 692, the central outlet 698, the parabolically-shaped outer surface of the impeller skirt 408, and the top of the diffuser 402. Accordingly, the seventh chamber C7 is a lobed chamber that originates at the channel 676 of each individual vortex finder 412 and extends to the central outlet 698 of the top cap 404, with the impeller 406, impeller skirt 408 and diffuser 402 being positioned in the seventh chamber C7. The seventh chamber C7 receives the twice-filtered water, e.g., water having minimal debris therein, from the fourth and fifth chambers C4, C5, and expels the filtered water from the central outlet 698.

Turning now to a description of the flow paths through the hydrocyclonic particle separator assembly 400, FIG. 25 is a sectional view of the hydrocyclonic particle separator assembly 400 that illustrates the flow paths therethrough. Although not shown in FIG. 25, it should be understood that the flow path within the intake 708 of the pool cleaner 700, 742 leading to the hydrocyclonic particle separator 400 is substantially similar to the flow paths shown in FIG. 10C. Thus, a first flow path F1 extends from the inlet opening 720 of the intake 708, across the channel 724, out of the outlet opening 722, into the inlet 446 of the canister body 440, across the canister intake channel 474, and out of the tangential outlet 472

where the fluid enters the canister body 440. Water flowing through the first flow path F1 is unfiltered water that is laden with large and small debris D_L, D_S.

The second flow path F2 starts at the end of the first flow path F1, e.g., at the tangential outlet 472, entering the inner chamber 470 of the canister body 440 at the tangential outlet 472. The second flow path F2 enters the inner chamber 470 at a tangent to the canister body 440, the inner chamber 470, and the first chamber C1 and is directed to flow between the inner wall of the canister body 440 and the filtering assembly 426. The tangential entrance of the second flow path F2 results in the generation of a cyclonic/rotational flow within the first chamber C1 that circles about a central axis A2 of the hydrocyclonic particle separator assembly 400. The cyclonic flow of the second flow path F2 within the first chamber C1 results in large debris particles D_L, e.g., debris having an aggregate size (e.g., each dimension) of up to about 1.25 inches, for example, such as, sticks, leaves, grass, coarse sand, fine sand, stones, pebbles, insects, small animals, etc., striking the interior surface of the canister body 440 and the filtering assembly 426 and losing velocity, resulting in the large debris particles D_L falling to the bottom of the canister body 440 and into the large debris container 444 (e.g., the second chamber C2) where they are collected and stored until the hydrocyclonic particle separator assembly 400 is removed from the pool cleaner and emptied.

A third flow path F3 extends radially inward from the second flow path F2, flowing across the filtering medium 430 of the filtering assembly 426 into the third chamber C3. Fluid and smaller debris D_S are contained in the third flow path F3, but the larger debris D_L has been separated out. Accordingly, the fluid in the third flow path F3 is once-filtered fluid. The third flow path F3 enters the third chamber C3 around the outer surface of the frustoconical bottom portions 640 of the cyclone

containers 420 and rises upward in the direction of the cylindrical top portions 638 of the cyclone containers 420. As the fluid of the third flow path F3 reaches the tangential inlet 636 of each of the cyclone containers 420, the third flow path F3 connects with fourth and fifth flow paths F4, F5. In particular, the third flow path F3 enters each of the cyclone containers 420 of the first and second set of cyclone containers 624, 626 substantially simultaneously as fluid rises to the level of the tangential inlets 636.

The fourth flow path F4 enters each individual cyclone container 420 of the second set of cyclone containers 626 at the respective tangential inlet 636 where it proceeds to the respective cyclone chamber 630, e.g., the fourth chamber C4. Substantially simultaneously to the fourth flow path F4 entering the cyclone containers 420 of the second set of cyclone containers 626, the fifth flow path F5 enters each individual cyclone container 420 of the first set of cyclone containers 624 at the respective tangential inlet 636 where it proceeds to the respective cyclone chamber 630, e.g., the fifth chamber C5. The placement of the individual cyclone container's tangential inlet 636, e.g., at a tangent to the respective cyclone chamber 630, results in the fourth and fifth flow paths F4, F5 being a cyclonic/rotational flow within each cyclone chamber 630. The fourth and fifth flow paths F4, F5 rotate within each individual cyclone container 440 of the respective second and first set of cyclone containers 626, 624 to separate smaller debris D_S, e.g., debris having an aggregate size (e.g., each dimension) of up to about 0.080 inches, for example, such as, coarse sand, fine sand, silt, dirt, insects, etc., based on the ratio of the smaller debris' D_S centripetal force to fluid resistance from the fluid stream of the fourth and fifth flow paths F4, F5. More specifically, the fourth and fifth flow paths F4, F5 travel along the interior wall of the respective cyclone container 420, travels downward

along the cyclone container 420 through the frustoconical bottom portion 640 where the cyclone container 420 tapers, and toward the debris underflow nozzle 634.

As the fourth and fifth flow paths F4, F5 travel along the frustoconical bottom portion 640, the rotational radius of the fourth and fifth flow paths F4, F5 is reduced. As the rotational radius of the fourth and fifth flow paths F4, F5 is reduced, the larger and denser particles of the smaller debris particles D_S within the fourth and fifth flow paths F4, F5 have too much inertia to follow the continually reducing rotational radius of the fourth and fifth flow paths F4, F5 causing the smaller debris particles D_S to contact the inner surface of the cyclone container 420 and fall to the bottom where the small debris particles D_S fall through the respective debris underflow nozzles 634 and onto the tapered fine debris container 434. The tapered configuration of the fine debris container 434 causes the small debris particles D_S to slide downward and into the sixth chamber C6 where the small debris particles D_S are collected and stored by the fine debris container 434 until the hydrocyclonic particle separator assembly 400 is removed from the pool cleaner and emptied. Thus, the small debris particles D_S separated from the water in both the first and second set of cyclone containers 624, 626 is collected in the same fine debris container 434 until the pool cleaner is emptied.

The result of the above description is that smaller and smaller debris is separated from the fluid flowing in the fourth and fifth flow paths F4, F5 as these flow paths proceed down the frustoconical bottom portions 640 of the respective cyclone containers 420 forming an inner vortex. Additionally, as the fluid within the fourth and fifth flow paths F4, F5 reaches the bottom of the frustoconical bottom portions 640 and the inner vortex, it slows down causing the fluid therein to be pulled upward

through the respective vortex finders 412 as twice-filtered fluid. The twice-filtered fluid enters the seventh chamber C7 where it merges with the sixth flow path F6.

The sixth flow path F6 connects with the fourth and fifth flow paths F4, F5 at the top of the channel 676 of each vortex finder 412 where twice-filtered water enters the seventh chamber C7. The sixth flow path F6 extends from the channel 676 of each vortex finder 412, across each inner lobe 692 of the top cap 404, into the tubular outlet 698, and through the diffuser 402 to exit the hydrocyclonic particle separator assembly 400. That is, the sixth flow path F6 completely traverses the seventh chamber C7.

Accordingly, the larger cyclonic/rotational flow travels about the central axis A2, while the smaller cyclonic/rotational flows are formed and flow about the secondary central axes of the individual cyclone containers 420 of the cyclone block 418, resulting in a plurality of smaller cyclonic/rotational flows within a larger cyclonic/rotational flow. In particular, the hydrocyclonic particle separator assembly 400 includes three levels of cyclonic/rotational flow – around the filtering assembly 426, within the second set of cyclone containers 626, and within the first set of cyclone containers 624.

As such, debris-laden fluid flowing through the pool cleaner is filtered twice by particle separation due to the generated cyclones. Utilizing the cyclonic flows within the pool cleaner to separate the particles and drop the particles out of the flow path results in the retention of suction performance throughout the cleaner, as there is no opportunity for the debris particles to clog the filtering elements. This allows for optimum fluid flow performance through entire cleaning cycles, longer cleaner run times between debris removal, and the collection of more debris before needing to empty the hydrocyclonic particle separator assembly 400. As is known in the art, the

outward flow of clean fluid results in an opposing force, which, as is also known in the art, can be relied upon in navigation of the pool cleaner for the purpose of forcing a pool cleaner downward against the floor when the pool cleaner is traversing the floor and sideways against a wall, when the pool cleaner is traversing a wall of the pool.

It will be understood that the embodiments of the present disclosure described herein are merely exemplary and that a person skilled in the art may make many variations and modifications without departing from the spirit and the scope of the disclosure. All such variations and modifications, including those discussed above, are intended to be included within the scope of the disclosure.

CLAIMS:

1. A pool cleaner, comprising:
an intake having an inlet opening;
a drive assembly causing motion of the pool cleaner;
a separator assembly, comprising:
a canister subassembly, the canister subassembly comprising:
a canister body having a chamber therein;
a first debris container hingedly connected to a bottom edge of the canister body;
an inlet in fluidic communication with the intake, the inlet allowing fluid to enter the canister body; and
an outlet, wherein the inlet, the outlet, and the chamber are in fluidic communication;
wherein a cyclonic flow is generated within the chamber; and
wherein said pool cleaner creates a suction effect at an inlet opening receiving debris-laden water from a pool or spa.

2. The pool cleaner of claim 1, wherein the separator assembly comprises a turbine motor and an impeller in mechanical communication with the turbine motor and being rotationally driven by the turbine motor, wherein the impeller accelerates fluid through the outlet causing the cyclonic flow to be generated within the chamber.

3. The pool cleaner of claim 1, wherein the canister subassembly comprises a filtering medium assembly disposed within the canister body, and wherein the cyclonic flow is generated between the canister body and the filtering medium assembly.

4. The pool cleaner of claim 3, wherein the filtering medium assembly comprises a filtering medium support and a filtering medium.

5. The pool cleaner of claim 3, wherein the filtering medium assembly is configured to separate debris particles from a fluid flow during the cyclonic flow.

Date Reçue/Date Received 2022-02-03

6. The pool cleaner of claim 1, wherein the canister subassembly comprises a second debris container.

7. The pool cleaner of claim 6, wherein the second debris container comprises a dish and a central radial extension protruding from a bottom surface of the second debris container.

8. The pool cleaner of claim 7, wherein the second debris container dish comprises a rounded dish including a central hub.

9. The pool cleaner of claim 7, wherein the central radial extension defines an inner chamber configured and dimensioned to maintain debris particles separated from a fluid flow.

10. The pool cleaner of claim 9, wherein the central radial extension is disposed against a dish of the first debris container, the central radial extension maintaining a separation between the debris particles within the inner chamber and debris particles collected in the first debris container.

11. The pool cleaner of claim 10, comprising a gasket disposed between the dish of the first debris container and the central radial extension, the gasket maintaining separation between the debris particles within the inner chamber and the debris particles collected in the first debris container.

12. The pool cleaner of claim 11, wherein positioning the first debris container in an open position simultaneously empties the first debris container and the inner chamber of the second debris container.

13. The pool cleaner of claim 1, wherein the canister subassembly comprises a cyclone block having a cyclone container.

14. The pool cleaner of claim 13, wherein said chamber in which said cyclonic flow is generated is within said cyclone container within said canister body.

Date Reçue/Date Received 2022-02-03

15. The pool cleaner of claim 13, wherein said chamber in which said cyclonic flow is generated is external to the container but internal to the canister body.

16. The pool cleaner of claim 13, wherein said chamber in which said cyclonic flow is generated is external to the container but internal to the canister body, and wherein a second cyclonic flow is generated within said cyclone container.

17. The pool cleaner of claim 13, wherein the cyclone block includes a plurality of cyclone containers.

18. The pool cleaner of claim 17, wherein each of the cyclone containers comprises a cylindrical cyclone chamber with a tangential inlet and a debris underflow nozzle.

19. The pool cleaner of claim 18, wherein the cyclone containers are radially disposed around a central axis.

20. The pool cleaner of claim 17, wherein each of the cyclone containers comprises a cylindrical top portion, a frustoconical bottom portion, and a debris underflow nozzle at a distal end of the cyclone container.

21. The pool cleaner of claim 17, wherein the plurality of cyclone containers comprises a first set of radially disposed cyclone containers and a second set of radially disposed cyclone containers positioned around the first set of radially disposed cyclone containers.

22. The pool cleaner of claim 17, wherein each of the plurality of cyclone containers is configured to separate debris particles from a fluid flow.

23. The pool cleaner of claim 17, wherein the canister subassembly comprises a ring of vortex finders, each of the vortex finders positioned within respective cyclone containers of the plurality of cyclone containers.

Date Reçue/Date Received 2022-02-03

24. The pool cleaner of claim 23, wherein the ring of vortex finders comprises a central portion and a plurality of perimeter flaps, each of the perimeter flaps including a vortex finder.

25. The pool cleaner of claim 24, wherein a top surface of the central portion is recessed relative to surfaces of the plurality of perimeter flaps.

26. The pool cleaner of claim 24, wherein each of the plurality of perimeter flaps are hingedly connected to a polygonal perimeter of the central portion.

27. The pool cleaner of claim 1, wherein the canister body defines a cylindrical configuration.

28. The pool cleaner of claim 1 wherein the inlet is a tangential inlet to the canister body.

29. The pool cleaner of claim 1, wherein the first debris container comprises a dish including upwardly angled side walls.

30. The pool cleaner of claim 1, comprising a debris separator ring disposed between the filtering medium assembly and the first debris container.

31. The pool cleaner of claim 30, wherein the debris separator ring comprises a mesh ring configured to maintain debris particles within the first debris container.

32. The pool cleaner of claim 1, wherein the canister subassembly comprises a top cap disposed over the canister body.

33. The pool cleaner of claim 32, wherein the top cap comprises a plurality of radially arched tubes defining a chamber extending to the outlet.

34. The pool cleaner of claim 32, wherein the top cap comprises a plurality of rounded lobes defining a chamber extending to the outlet.

Date Reçue/Date Received 2022-02-03

35. The pool cleaner of claim 1, wherein the drive assembly comprises one front roller, one rear roller, and two middle rollers.

36. The pool cleaner of claim 1, wherein the drive assembly comprises two front rollers, two middle rollers, and two rear rollers.

37. The pool cleaner of claim 1, wherein the drive assembly comprises a motor.

38. The pool cleaner of claim 1 having a power source comprised of electricity.

39. The pool cleaner of claim 1 having a power source comprised of positive water pressure.

40. The pool cleaner of claim 1 having a power source comprised of negative water pressure.

41. A pool cleaner, comprising:

an intake having an inlet opening;

a drive assembly causing motion of the pool cleaner;

a separator assembly, comprising:

a canister subassembly, the canister subassembly comprising:

a canister body having a chamber therein;

an inlet in fluidic communication with the intake, the inlet allowing fluid to tangentially enter the canister body; and

an outlet, wherein the inlet, the outlet, and the chamber are in fluidic communication;

wherein a cyclonic flow is generated within the chamber; and

wherein said pool cleaner creates a suction effect at the inlet opening receiving debris-laden water from a pool or spa.

42. The pool cleaner of claim 41, wherein the separator assembly comprises a turbine motor and an impeller in mechanical communication with the turbine motor and being rotationally driven by the turbine motor, wherein the impeller accelerates fluid through the outlet causing the cyclonic

Date Reçue/Date Received 2022-02-03

flow to be generated within the chamber.

43. The pool cleaner of claim 41, wherein the canister subassembly comprises a filtering medium assembly disposed within the canister body, and wherein the cyclonic flow is generated between the canister body and the filtering medium assembly.

44. The pool cleaner of claim 43, wherein the filtering medium assembly comprises a filtering medium support and a filtering medium.

45. The pool cleaner of claim 43, wherein the filtering medium assembly is configured to separate large debris particles from a fluid flow during the cyclonic flow.

46. The pool cleaner of claim 41, wherein the canister subassembly comprises a fine debris container.

47. The pool cleaner of claim 46, wherein the fine debris container comprises a dish and a central radial extension protruding from a bottom surface of the fine debris container.

48. The pool cleaner of claim 47, wherein the fine debris container dish comprises a rounded dish including a central hub.

49. The pool cleaner of claim 47, wherein the central radial extension defines an inner chamber configured and dimensioned to maintain small debris particles separated from a fluid flow.

50. The pool cleaner of claim 49, wherein the central radial extension is disposed against a dish of a large debris container, the central radial extension maintaining a separation between the small debris particles within the inner chamber and large debris particles collected in the large debris container.

Date Reçue/Date Received 2022-02-03

51. The pool cleaner of claim 50, comprising a gasket disposed between the dish of the large debris container and the central radial extension, the gasket maintaining separation between the small debris particles within the inner chamber and the large debris particles collected in the large debris container.

52. The pool cleaner of claim 51, wherein positioning the large debris container in an open position simultaneously empties the large debris container and the inner chamber of the fine debris container.

53. The pool cleaner of claim 41, wherein the canister subassembly comprises a cyclone block having a cyclone container.

54. The pool cleaner of claim 53, wherein said chamber in which said cyclonic flow is generated is within said cyclone container within said canister body.

55. The pool cleaner of claim 53, wherein said chamber in which said cyclonic flow is generated is external to the cyclone container but internal to the canister body.

56. The pool cleaner of claim 53, wherein said chamber in which said cyclonic flow is generated is external to the cyclone container but internal to the canister body, and wherein a second cyclonic flow is generated within said cyclone container.

57. The pool cleaner of claim 53, wherein the cyclone block includes a plurality of cyclone containers.

58. The pool cleaner of claim 57, wherein each of the cyclone containers comprises a cylindrical cyclone chamber with a tangential inlet and a debris underflow nozzle.

59. The pool cleaner of claim 58, wherein the cyclone containers are radially disposed around a central axis.

60. The pool cleaner of claim 57, wherein each of the cyclone containers comprises a

Date Reçue/Date Received 2022-02-03

cylindrical top portion, a frustoconical bottom portion, and a debris underflow nozzle at a distal end of the cyclone container.

61. The pool cleaner of claim 57, wherein the plurality of cyclone containers comprises a first set of radially disposed cyclone containers and a second set of radially disposed cyclone containers positioned around the first set of radially disposed cyclone containers.

62. The pool cleaner of claim 57, wherein each of the plurality of cyclone containers is configured to separate small debris particles from a fluid flow.

63. The pool cleaner of claim 58, wherein the canister subassembly comprises a ring of vortex finders, each of the vortex finders positioned within respective cyclone containers of the plurality of cyclone containers.

64. The pool cleaner of claim 63, wherein the ring of vortex finders comprises a central portion and a plurality of perimeter flaps, each of the perimeter flaps including a vortex finder.

65. The pool cleaner of claim 64, wherein a top surface of the central portion is recessed relative to surfaces of the plurality of perimeter flaps.

66. The pool cleaner of claim 64, wherein each of the plurality of perimeter flaps are hingedly connected to a polygonal perimeter of the central portion.

67. The pool cleaner of claim 41, wherein the canister body defines a cylindrical configuration.

68. The pool cleaner of claim 41, wherein the inlet is a tangential inlet to the canister body.

69. The pool cleaner of claim 41, wherein the canister subassembly comprises a large debris container hingedly connected to a bottom edge of the canister body.

70. The pool cleaner of claim 69, wherein the large debris container comprises a dish including upwardly angled side walls.

Date Reçue/Date Received 2022-02-03

71. The pool cleaner of claim 69, comprising a debris separator ring disposed between a filtering medium assembly and the large debris container.

72. The pool cleaner of claim 71, wherein the debris separator ring comprises a mesh ring configured to maintain large debris particles within the large debris container.

73. The pool cleaner of claim 41, wherein the canister subassembly comprises a top cap disposed over the canister body.

74. The pool cleaner of claim 73, wherein the top cap comprises a plurality of radially arched tubes defining a chamber extending to the outlet.

75. The pool cleaner of claim 73, wherein the top cap comprises a plurality of rounded lobes defining a chamber extending to the outlet.

76. The pool cleaner of claim 41, wherein the drive assembly comprises one front roller, one rear roller, and two middle rollers.

77. The pool cleaner of claim 41, wherein the drive assembly comprises two front rollers, two middle rollers, and two rear rollers.

78. The pool cleaner of claim 41, wherein the drive assembly comprises a motor.

79. The pool cleaner of claim 41 having a power source comprised of electricity.

80. The pool cleaner of claim 41 having a power source comprised of positive water pressure.

81. The pool cleaner of claim 41 having a power source comprised of negative water pressure.

Date Reçue/Date Received 2022-02-03

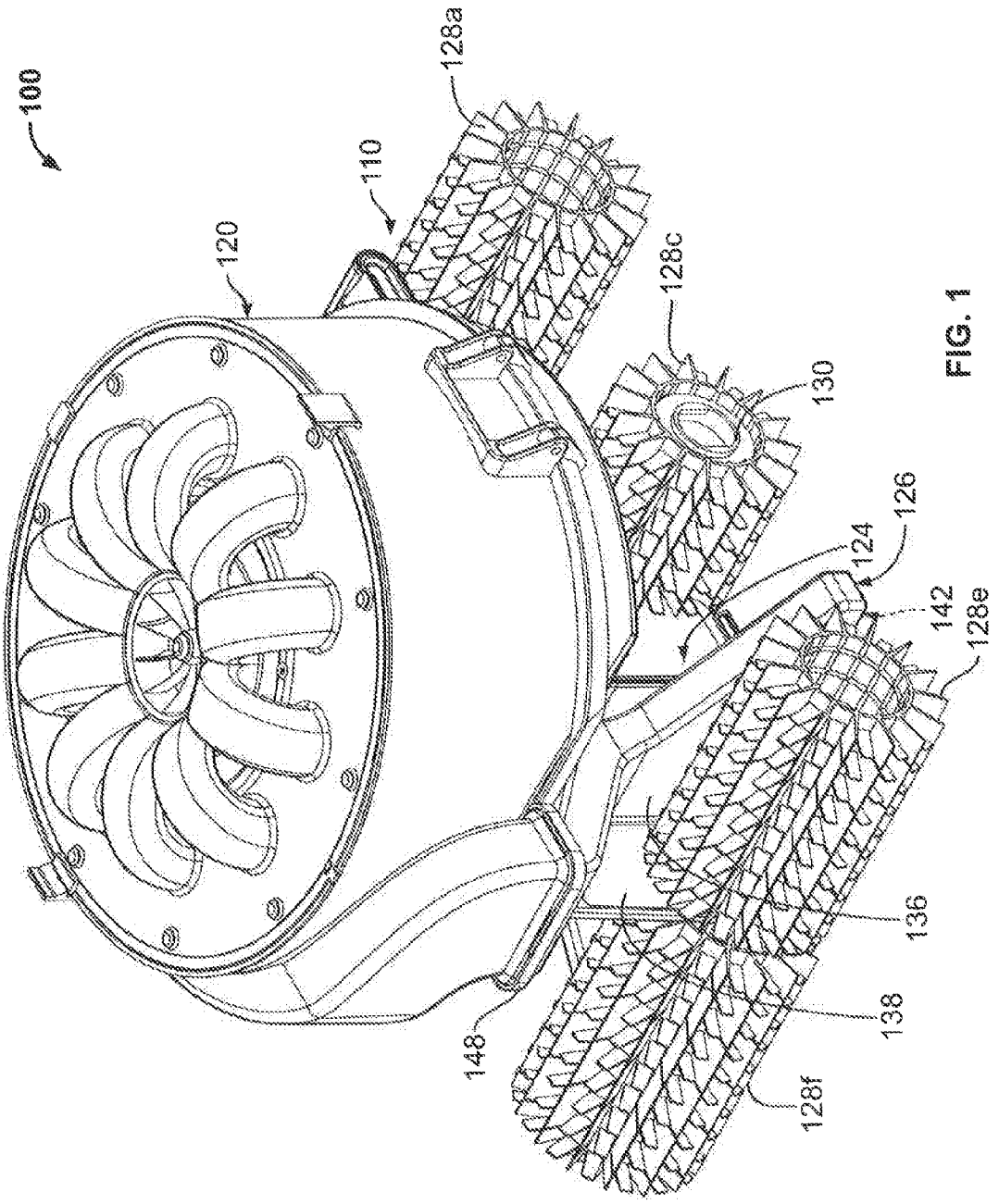

FIG. 1

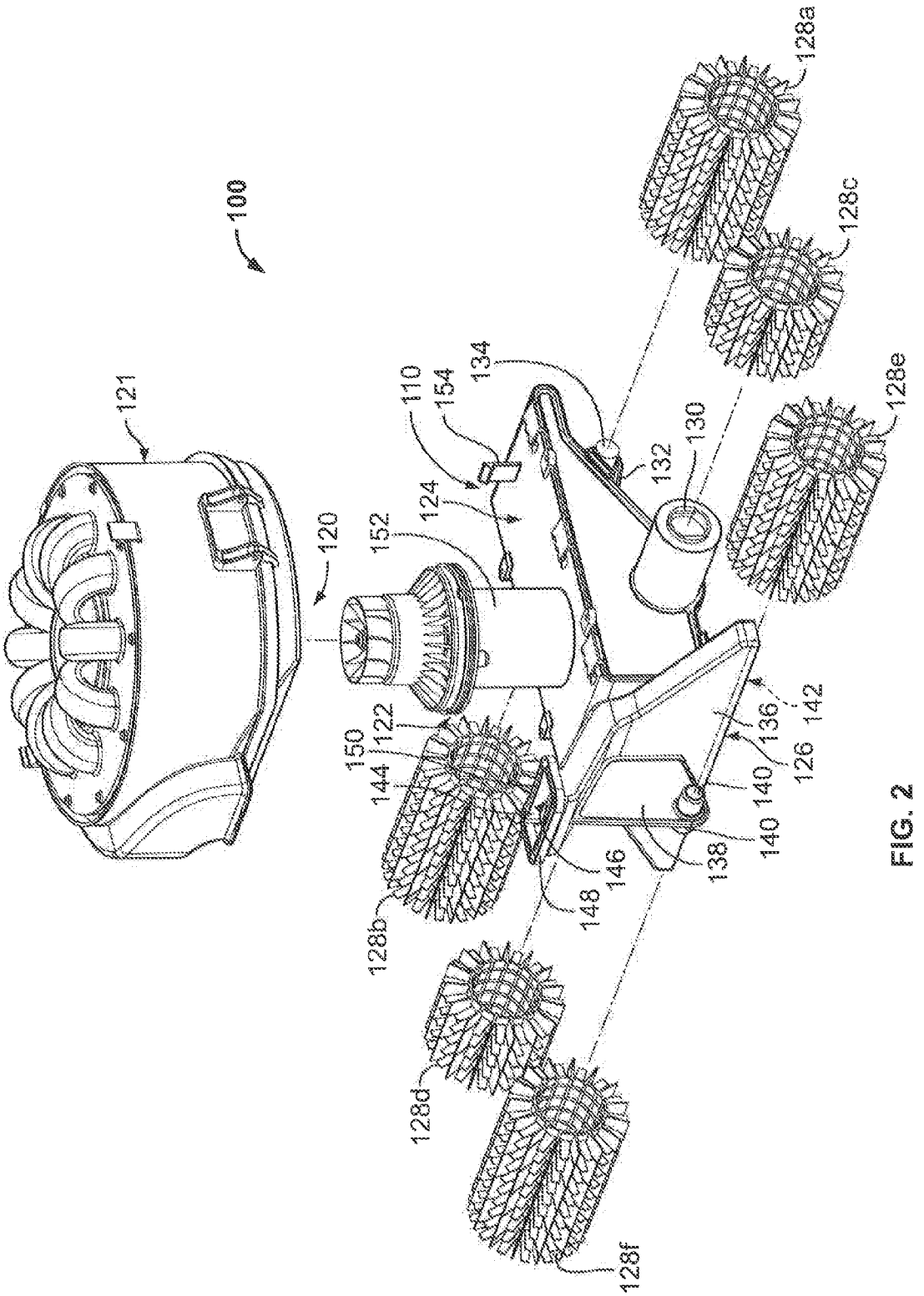
100
121
120
152
124
110
154
134
132
130
128a
128c
128e
122
150
144
146
148
128b
138
140
140
126
136
142
128d
128f

FIG. 2

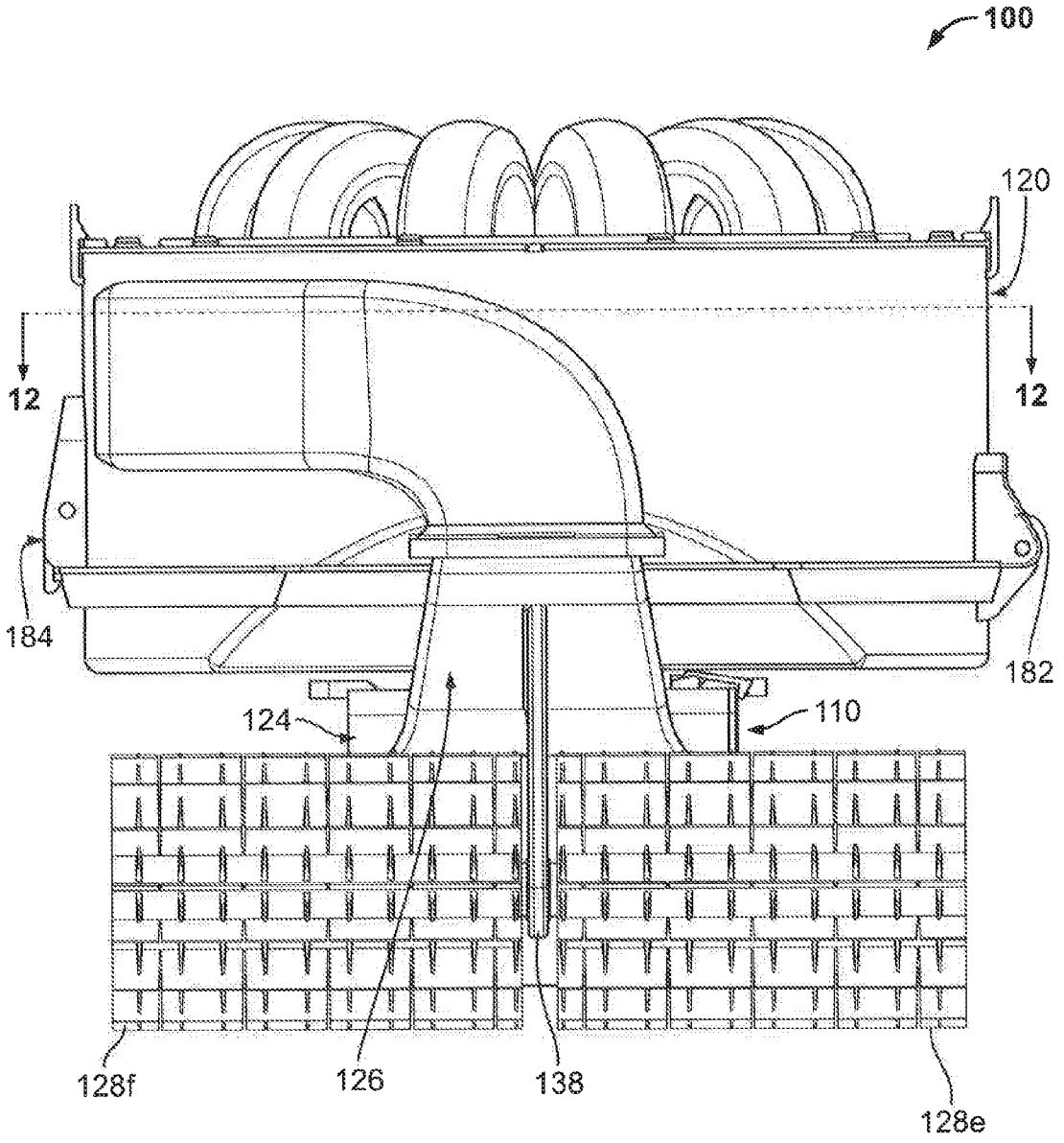

FIG. 3

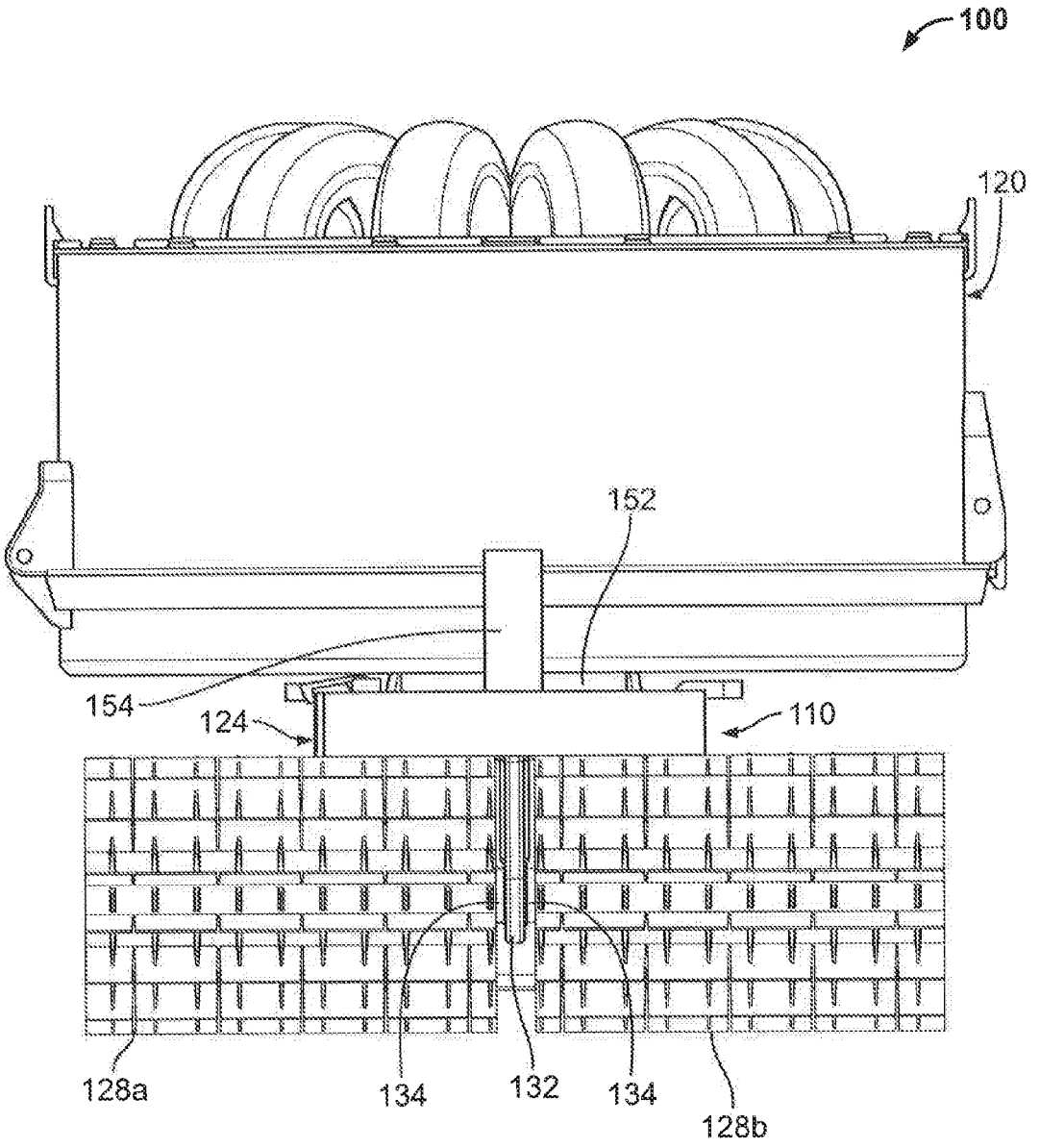

FIG. 4

Date Reçue/Date Received 2022-02-03

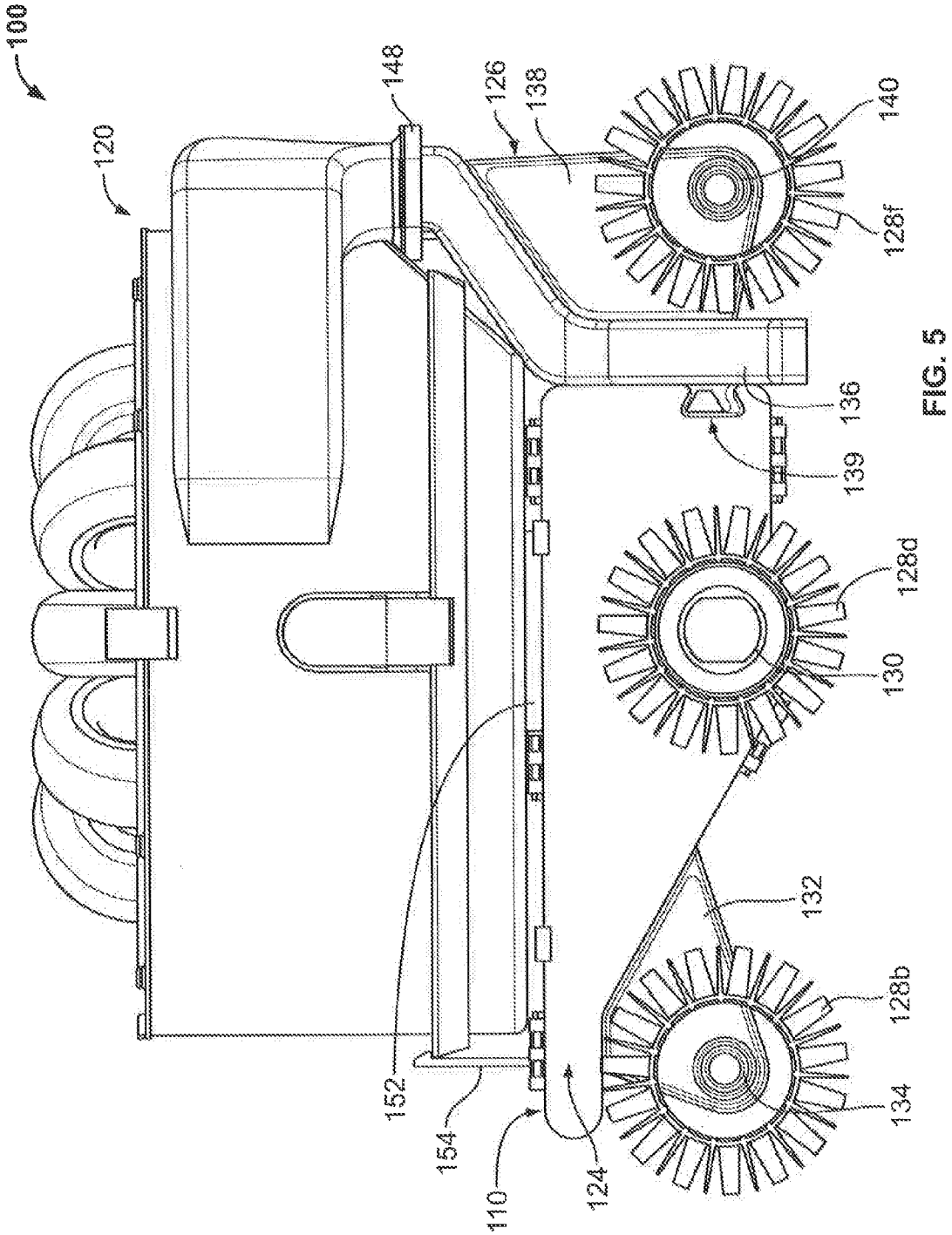
100
120
148
126
138
140
128f
136
139
128d
130
132
128b
134
152
154
110
124

FIG. 5

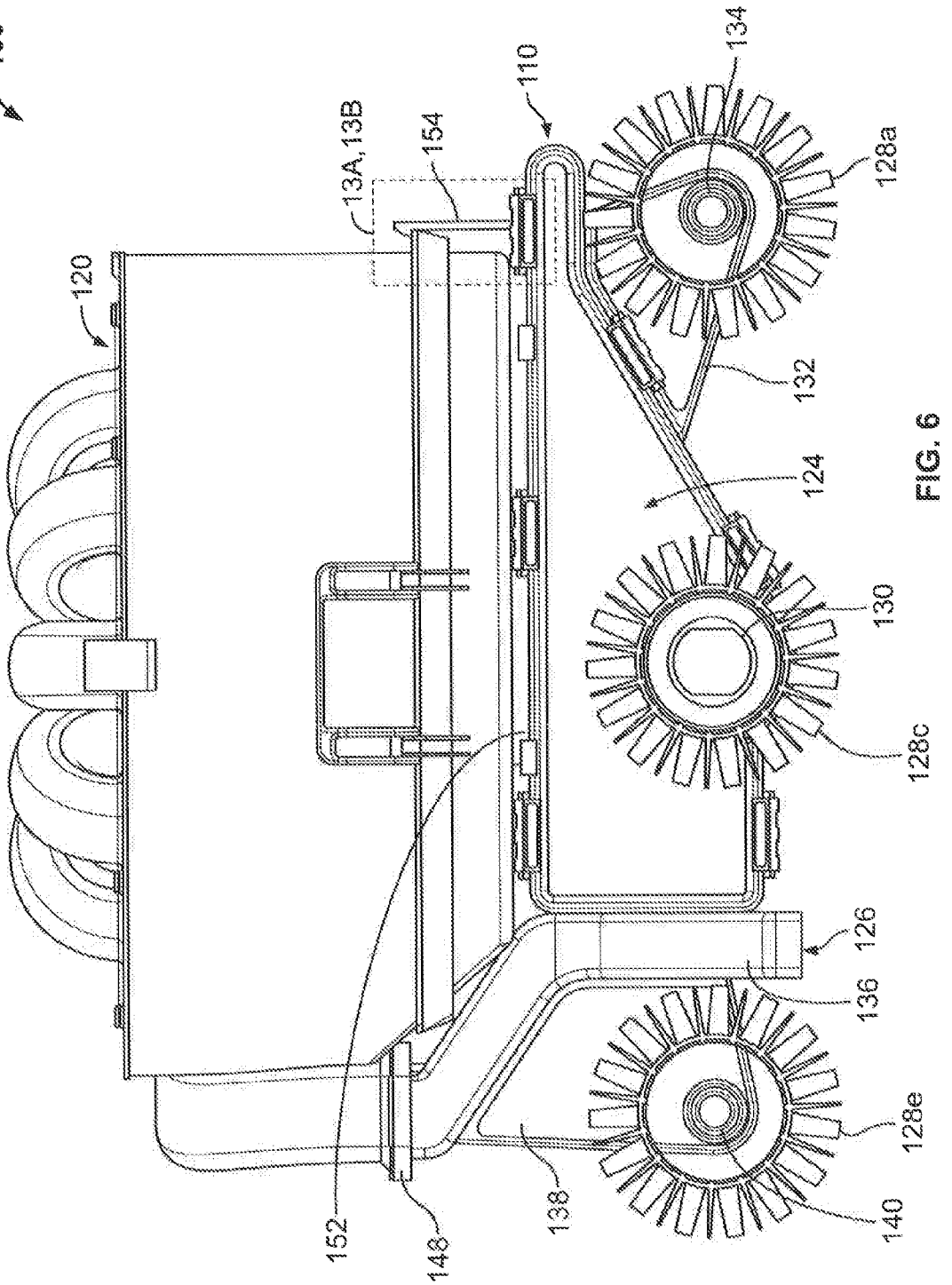
100
110
134
13A, 13B
154
128a
120
132
124
130
128c
126
136
128e
140
138
152
148

FIG. 6

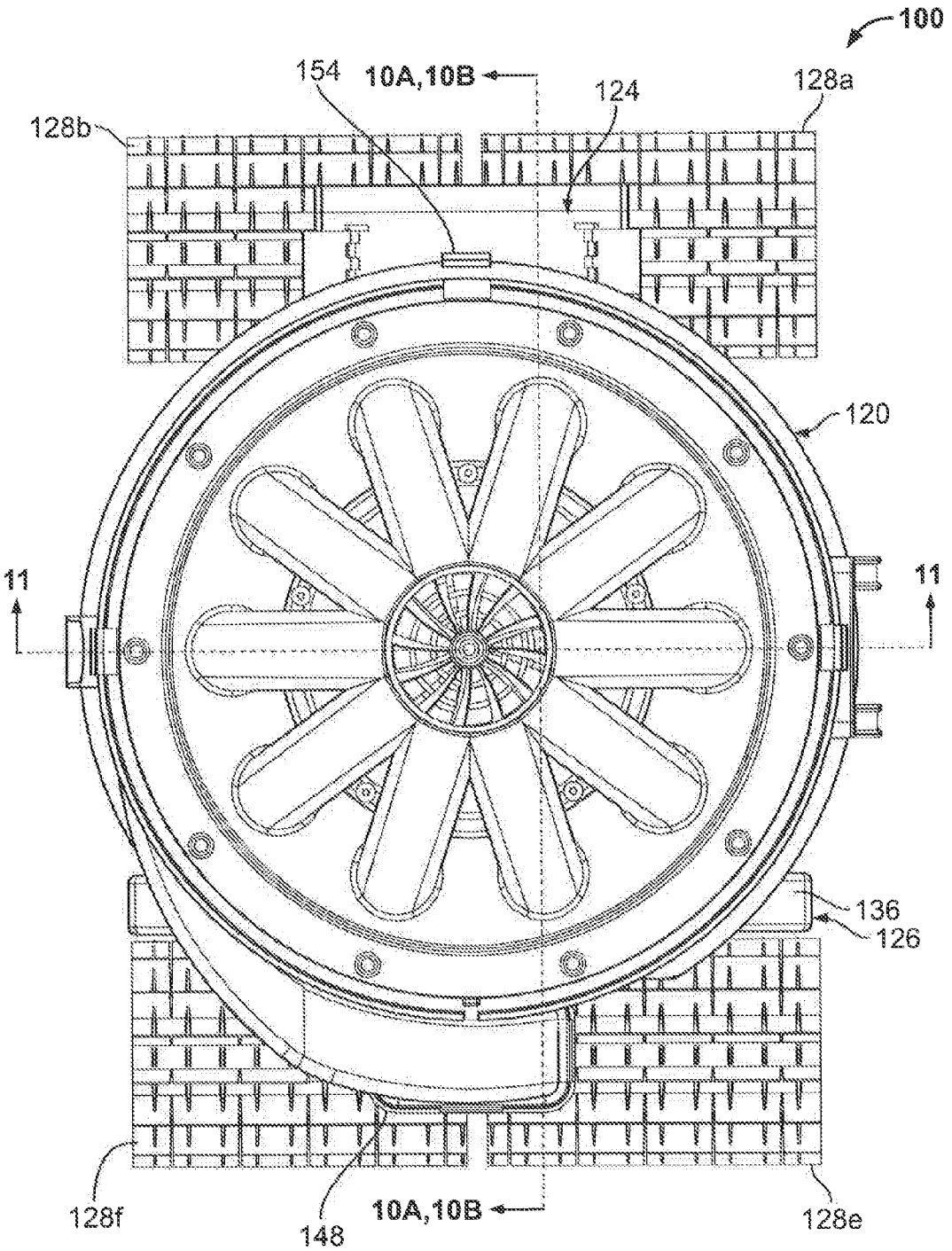
100
154
10A,10B
124
128a
128b
120
11
11
136
126
128f
148
10A,10B
128e

FIG. 7

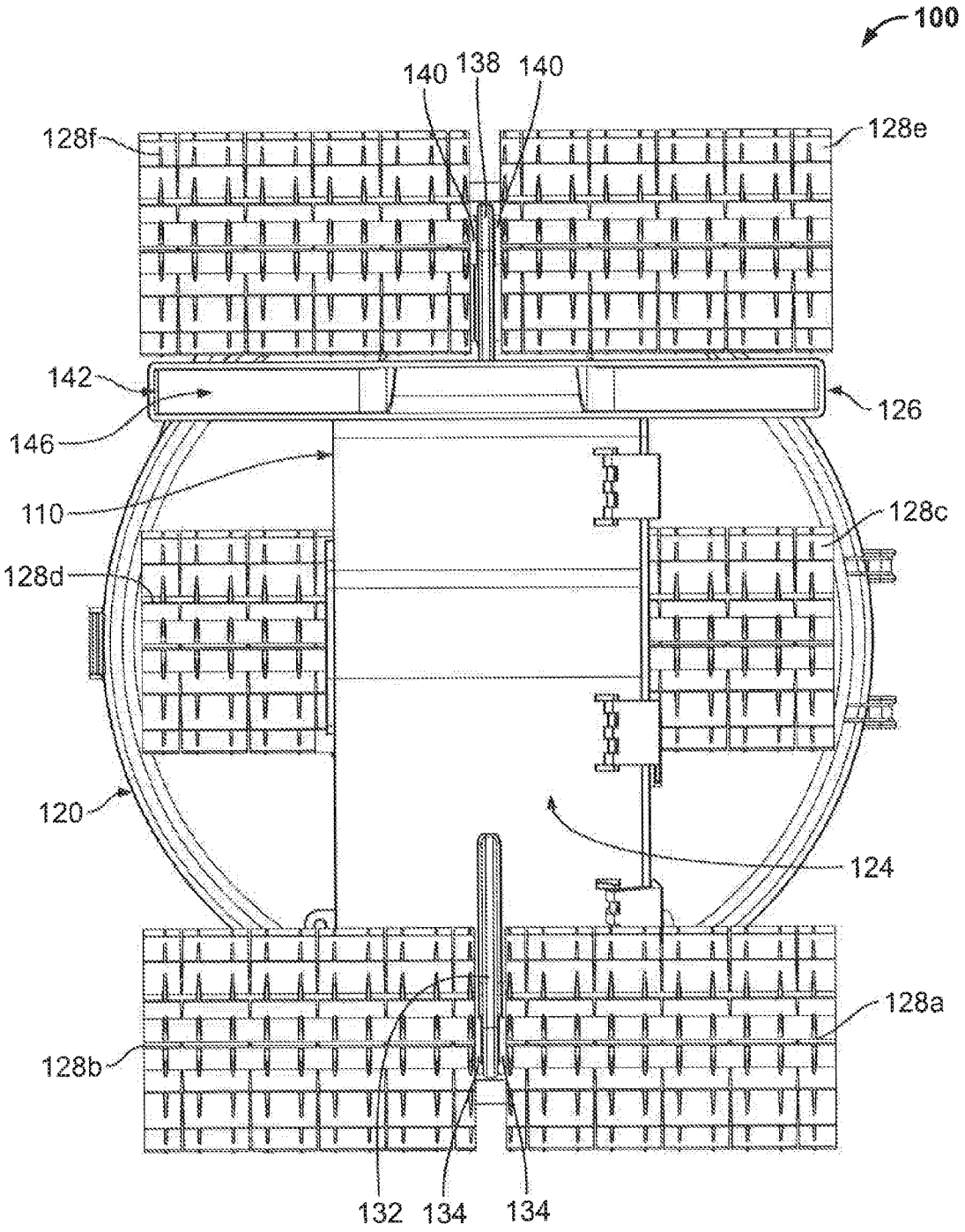

FIG. 8

Date Reçue/Date Received 2022-02-03

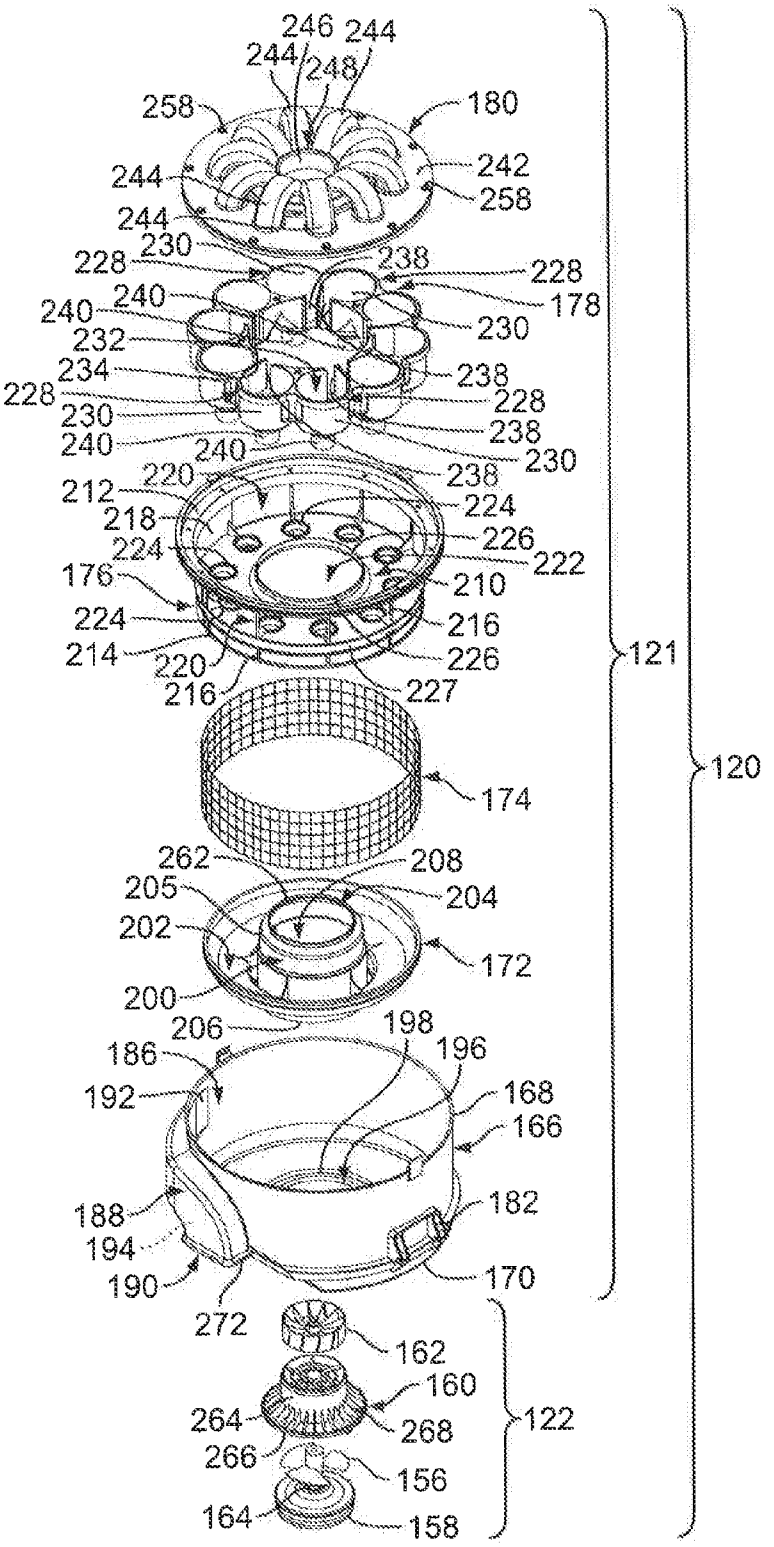
246
244
244
244
248
258
180
242
258
244
244
230
228
238
228
178
240
240
230
232
234
238
228
228
230
238
240
240
230
238
220
212
224
218
226
224
222
176
210
224
216
214
220
226
216
227
121
174
120
262
208
205
204
202
172
200
206
198
186
196
192
168
166
188
182
194
190
170
272
162
160
264
268
122
266
156
164
158

FIG. 9

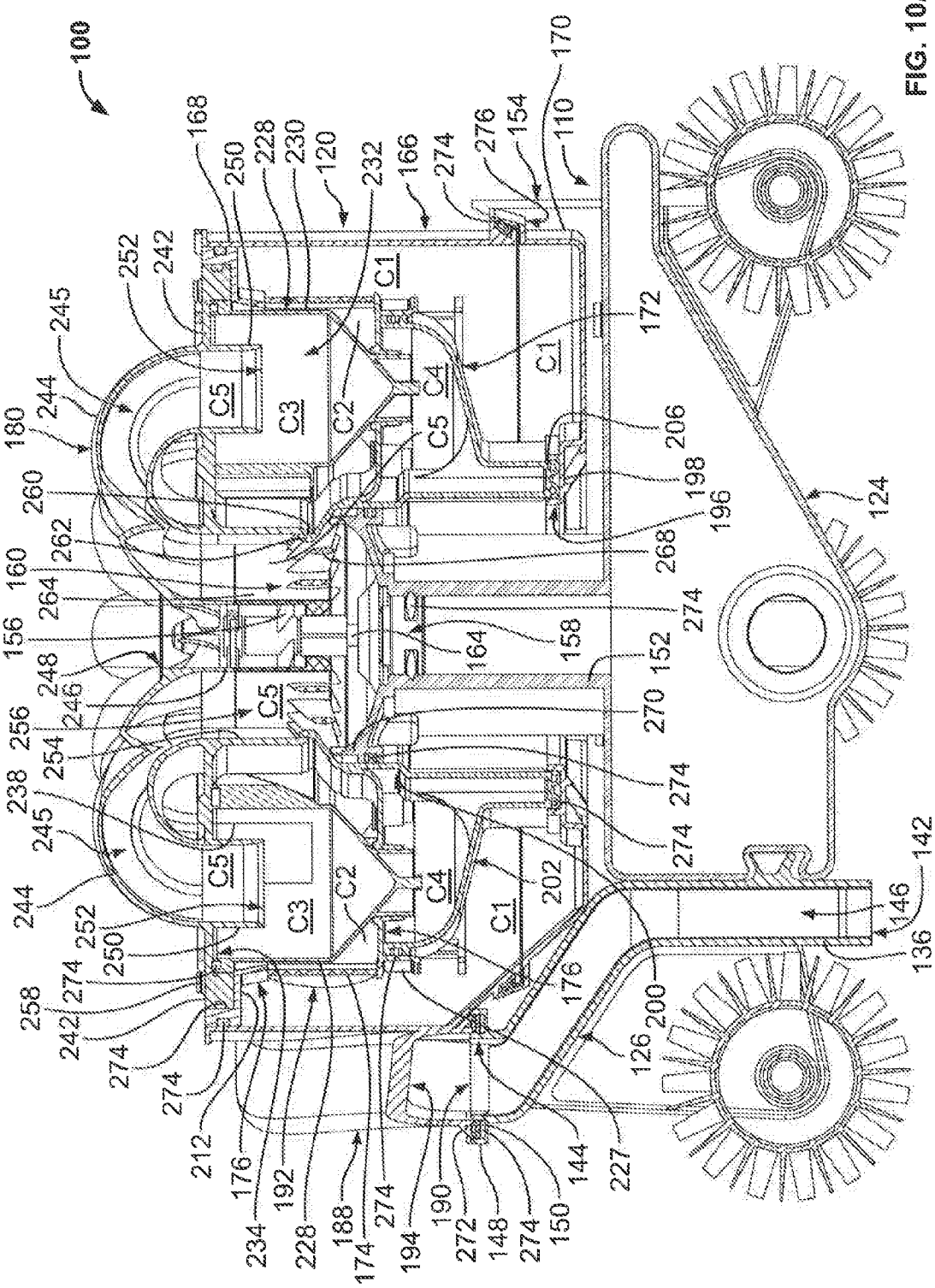
100
168
250
228
230
120
232
166
274
276
154
170
110
252
242
245
244
180
260
262
160
264
156
248
246
256
254
238
245
244
252
250
258
242
274
212
176
234
192
228
188
174
274
194
190
272
148
274
150
144
227
126
200
176
202
C1
C2
C3
C4
C5
172
206
198
196
268
124
158
164
152
270
274
142
146
136

FIG. 10A

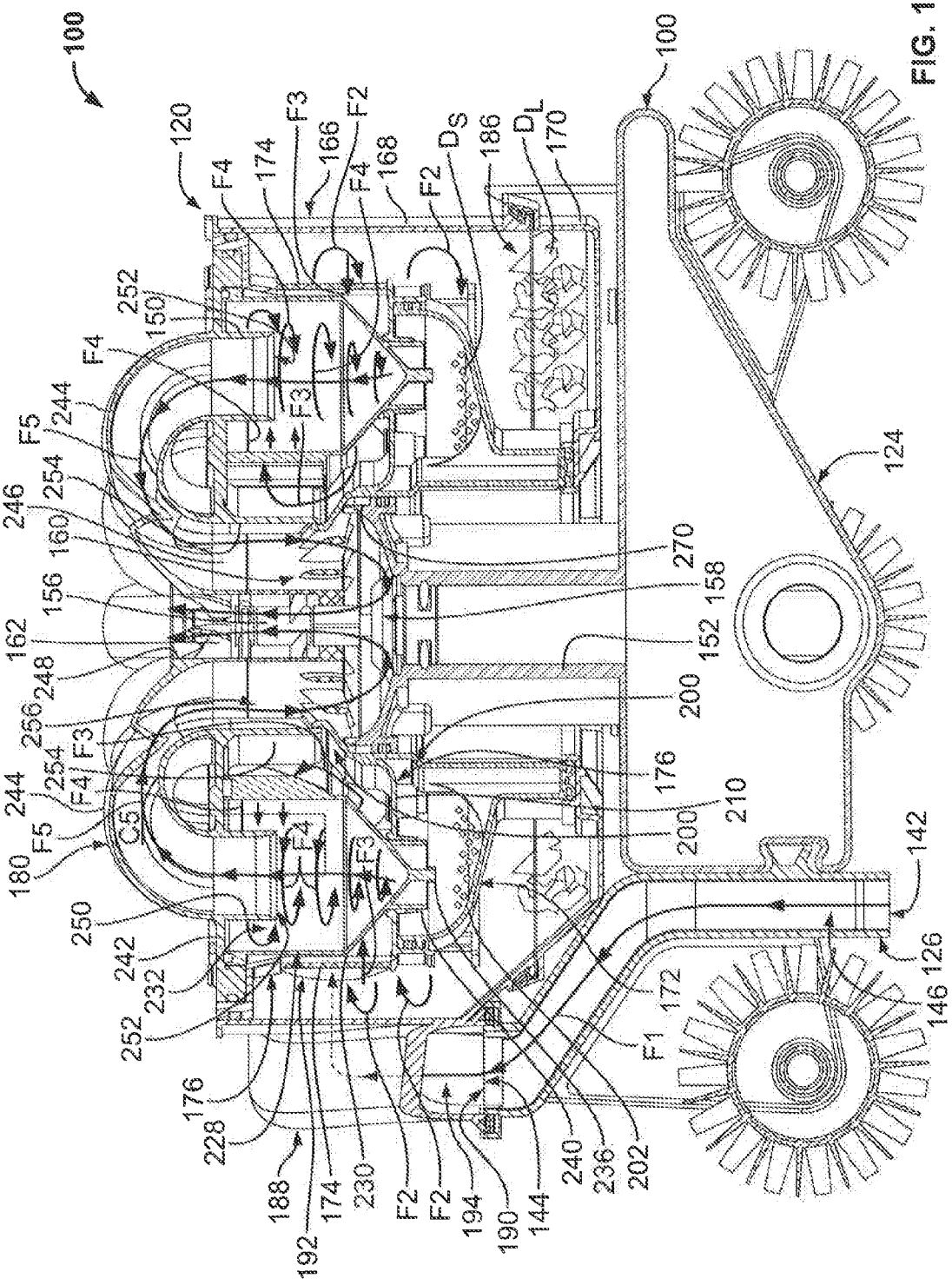
100
120
F4
174
F3
166
F2
168
D_S
186
D_L
170
252
150
244
F5
254
246
160
156
162
248
256
180
C5
250
242
232
228
188
192
230
194
190
144
240
236
202
F1
172
146
126
142
124
270
158
152
200
176
210

FIG. 10B

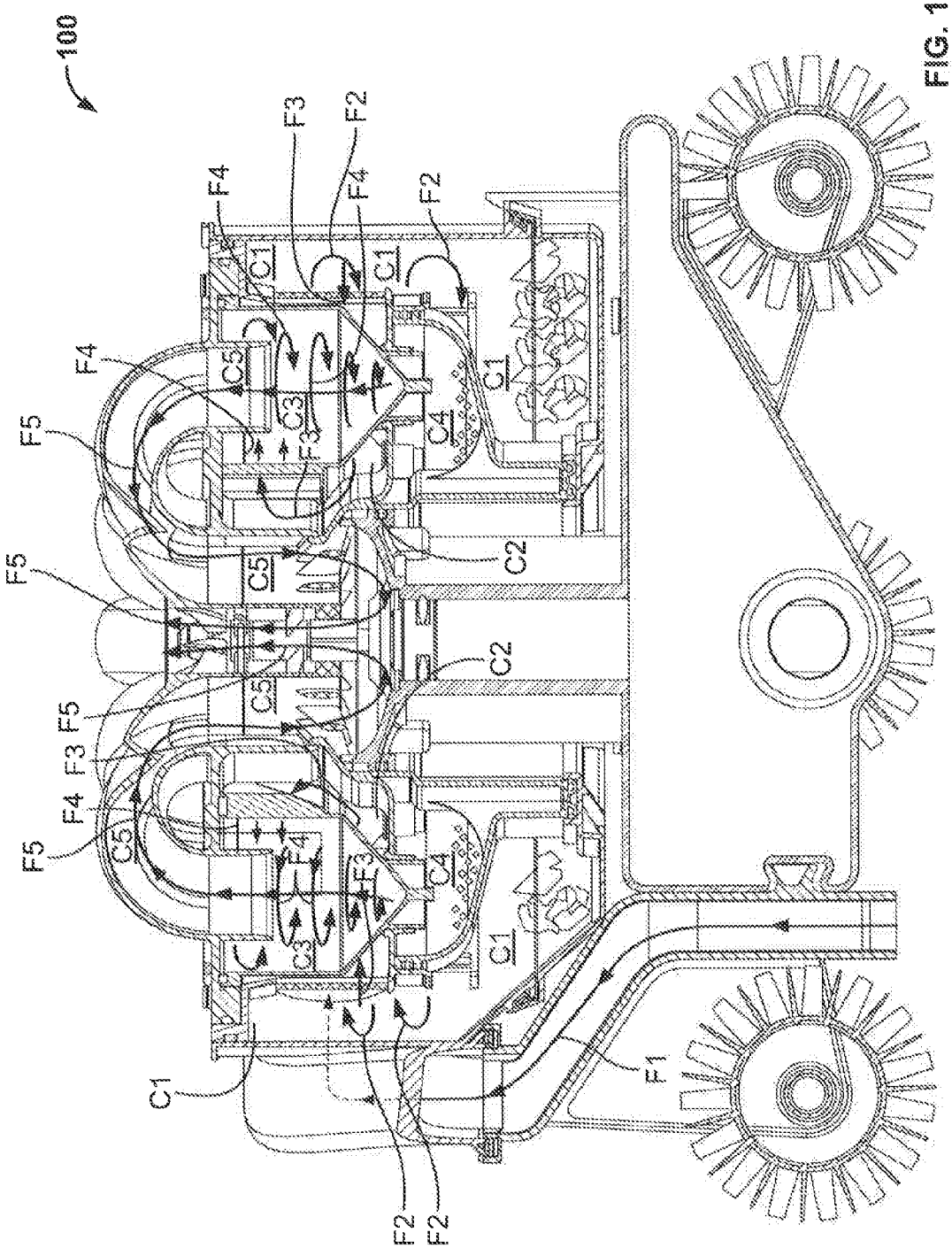

FIG. 10C

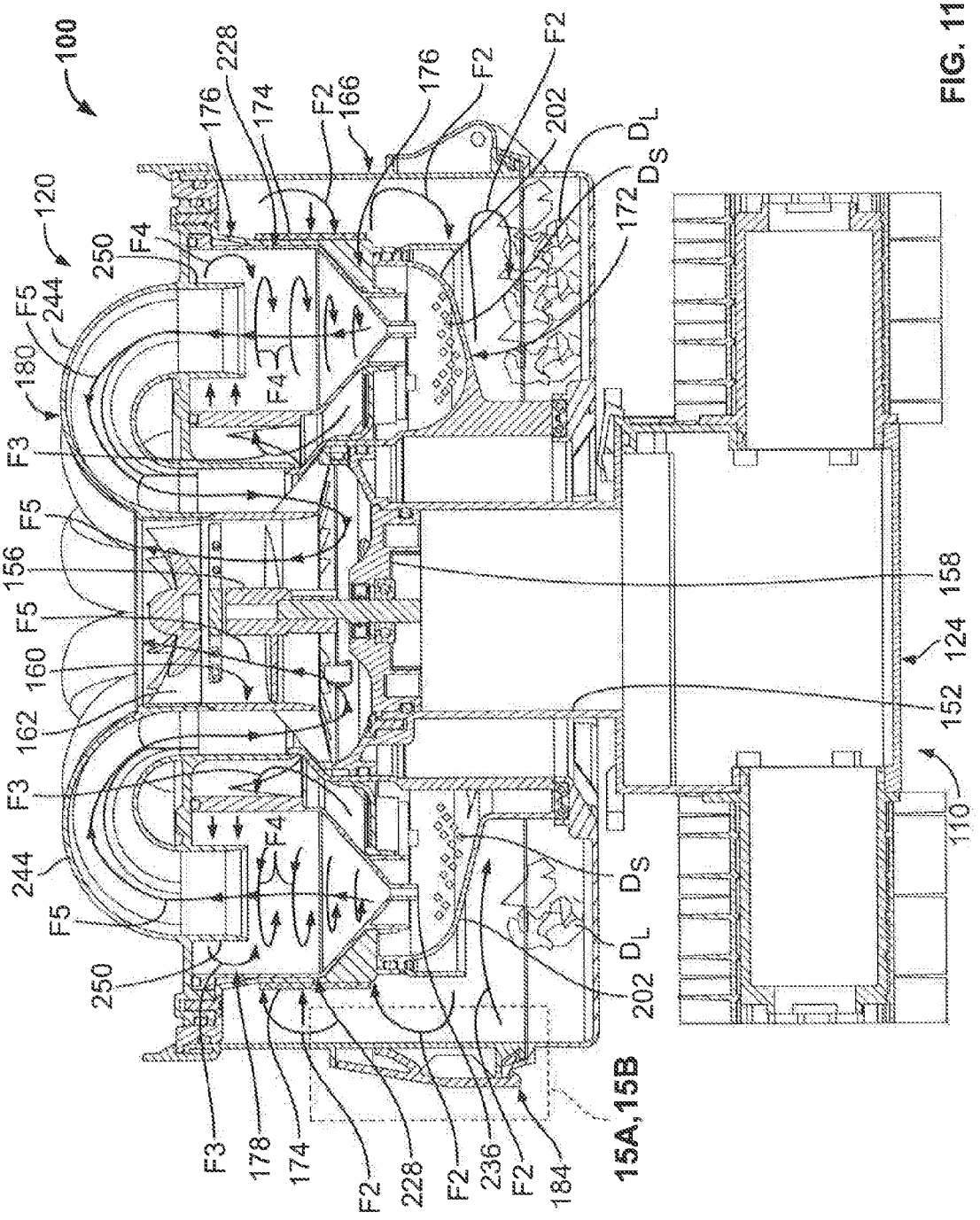
100
120
176
228
174
F2
166
176
F2
F2
202
D_L
D_S
172
250
F4
244
F5
180
F3
F5
156
F5
160
162
F3
244
F5
250
F4
F4
158
124
152
110
D_S
D_L
202
F3
178
174
F2
228
F2
236
F2
184
15A,15B

FIG. 11

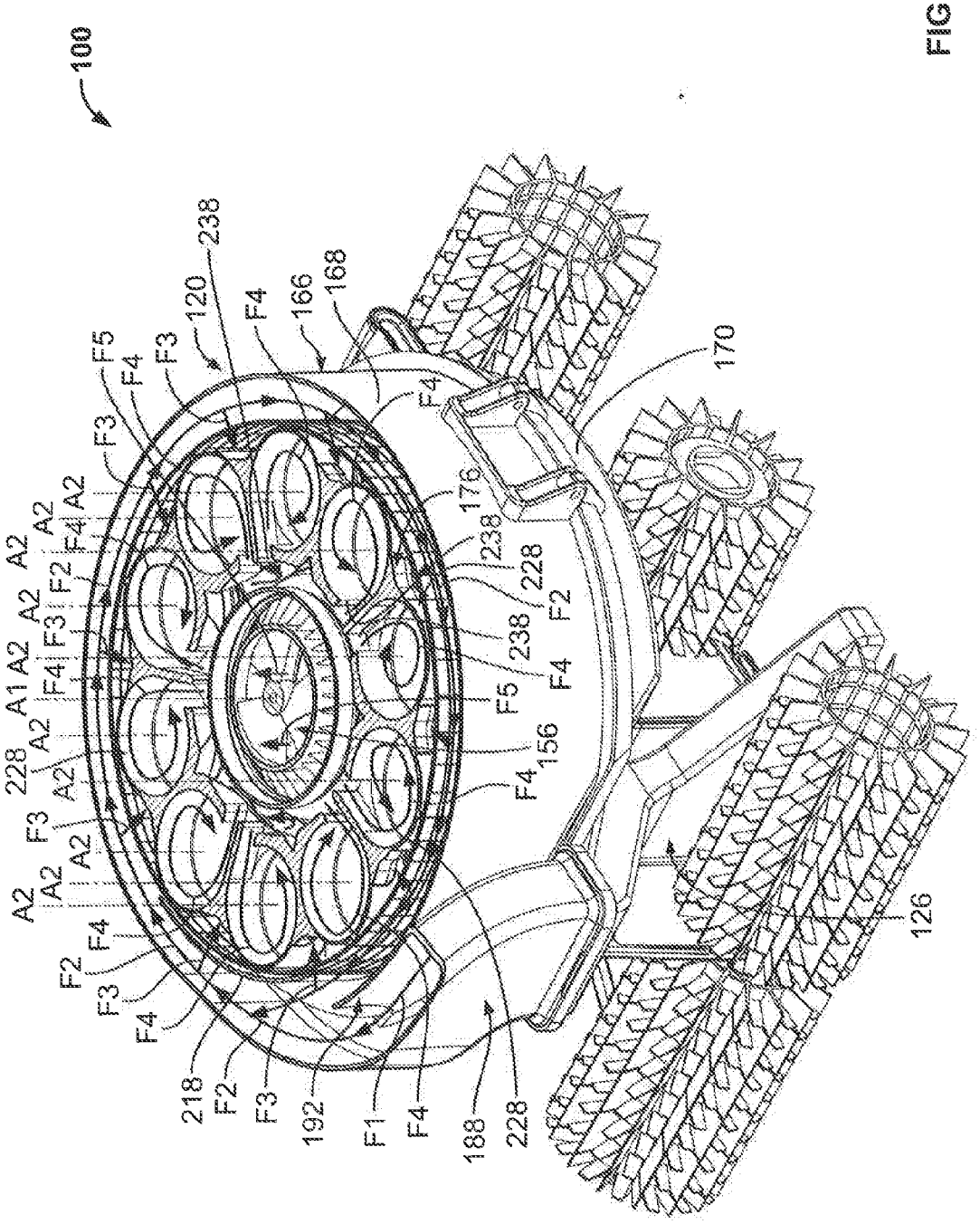
100
238
120
168
166
F4
F5
F4
F3
F3
A2
A2
A2

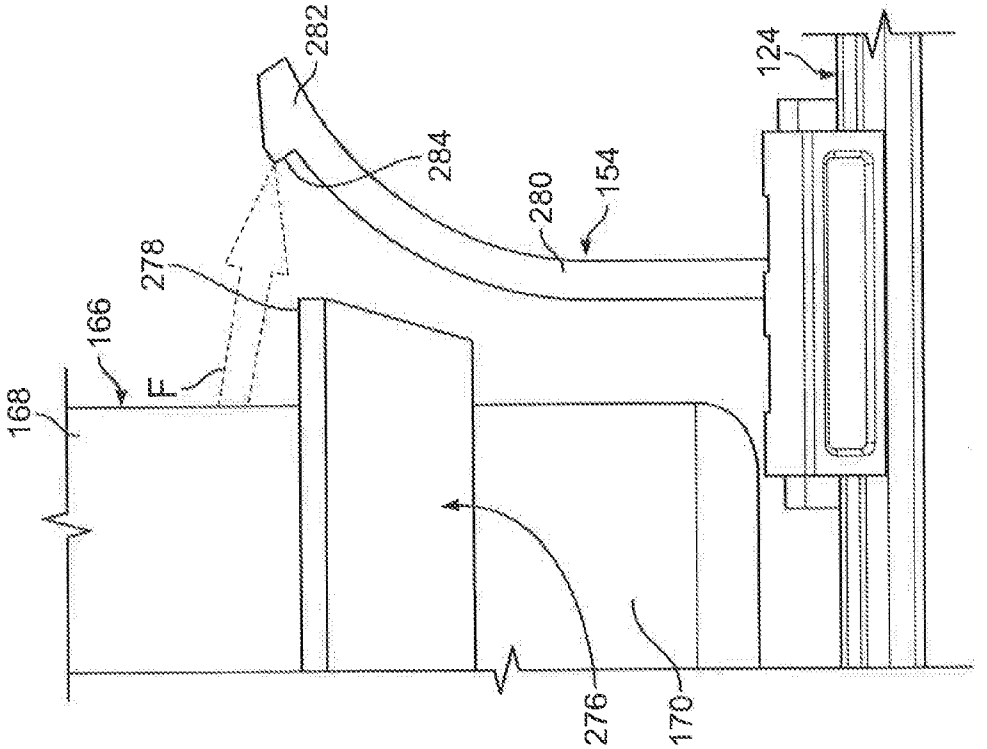

FIG. 13B

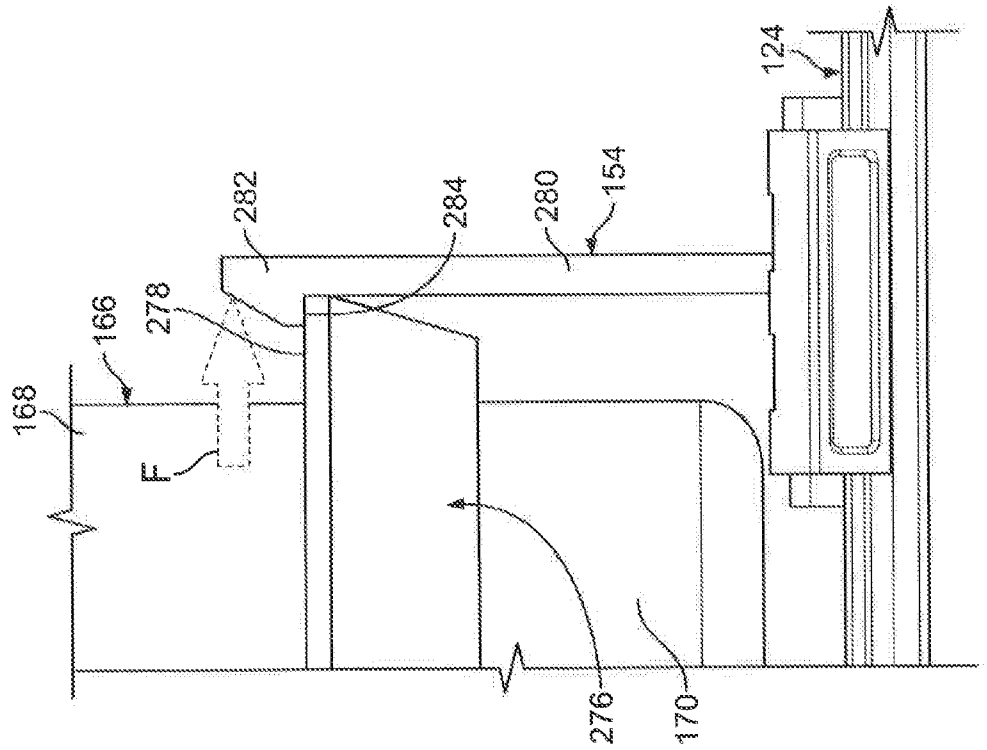

FIG. 13A

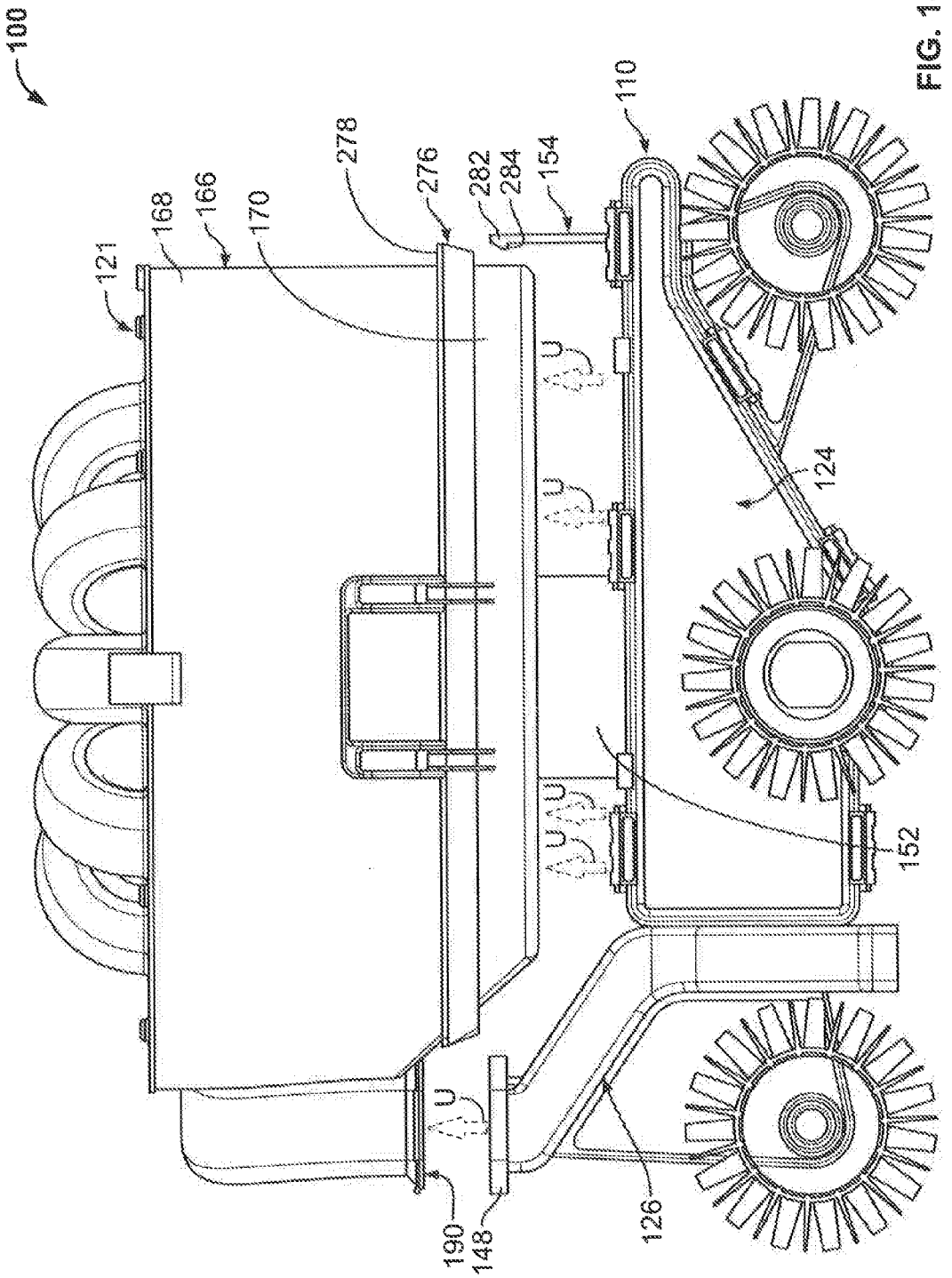

FIG. 14

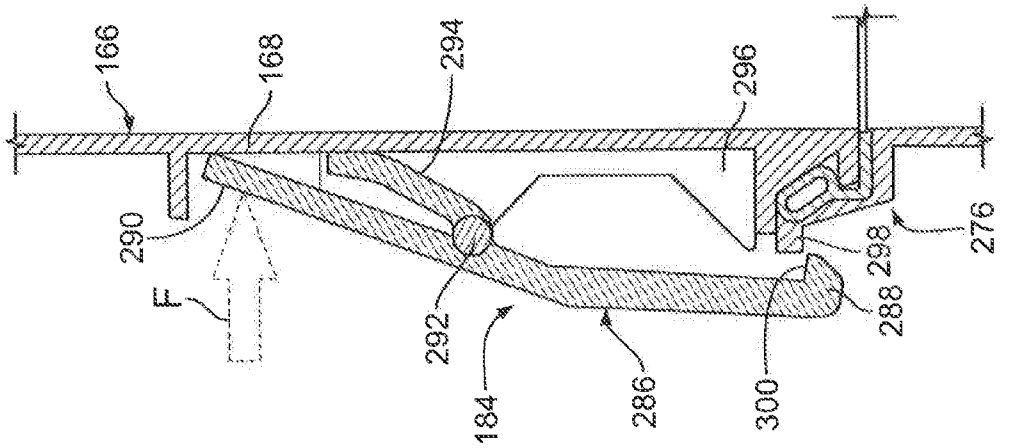

FIG. 15B

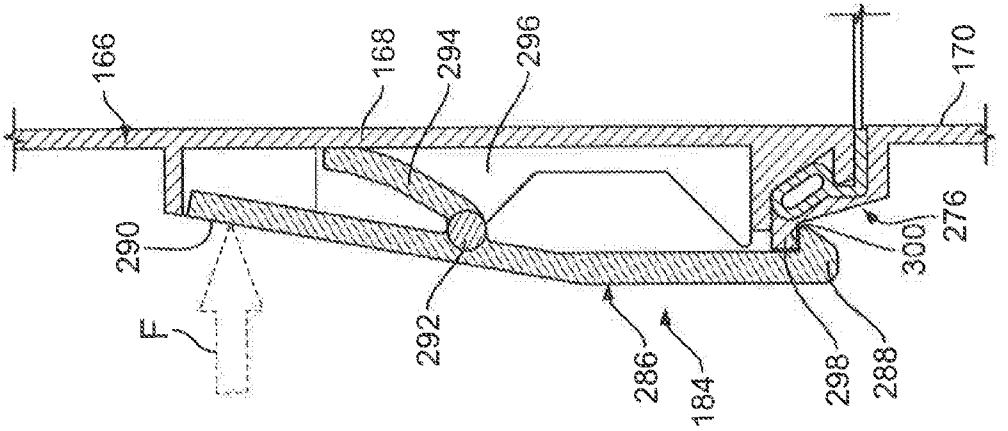

FIG. 15A

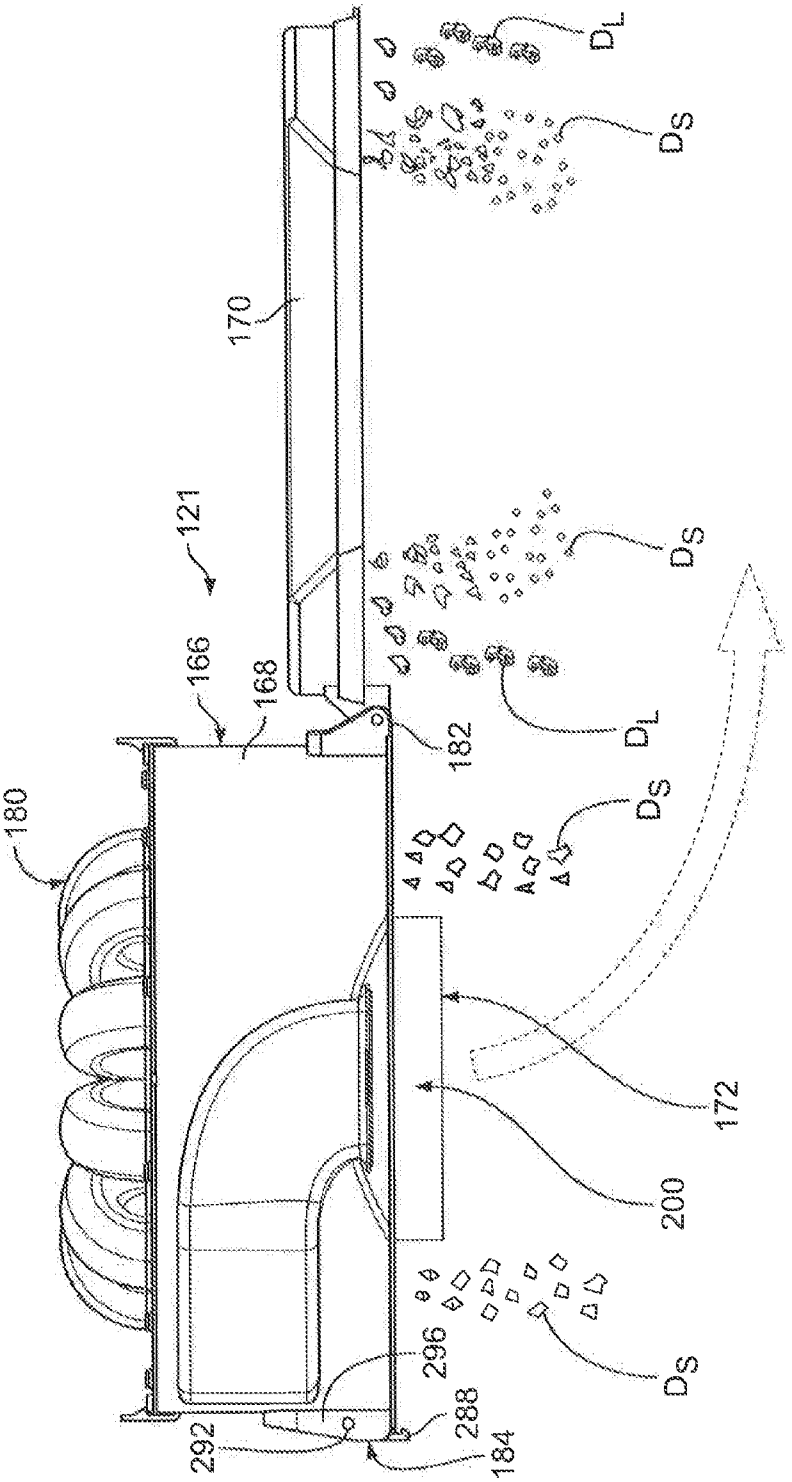

FIG. 16

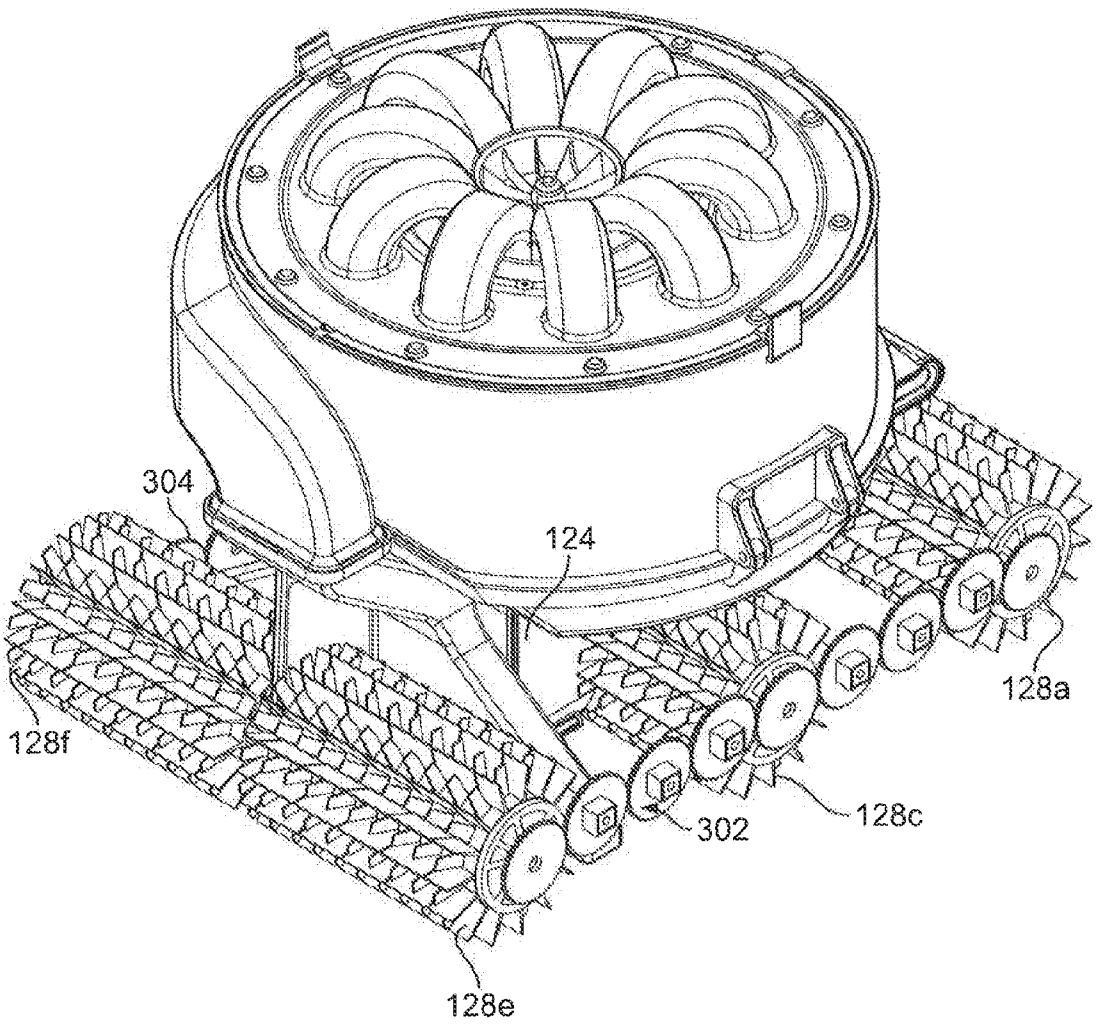

FIG. 17

Date Reçue/Date Received 2022-02-03

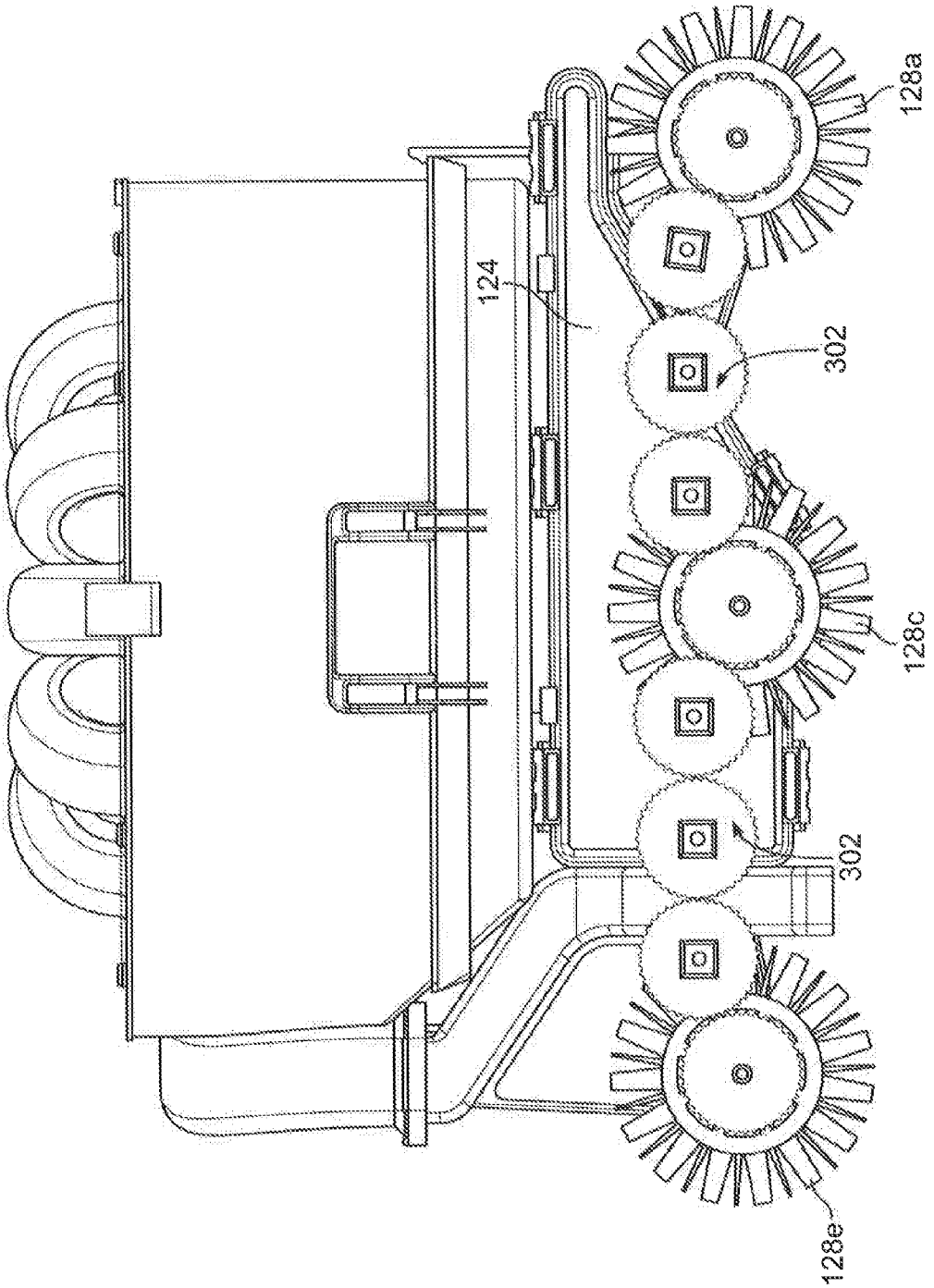

FIG. 18

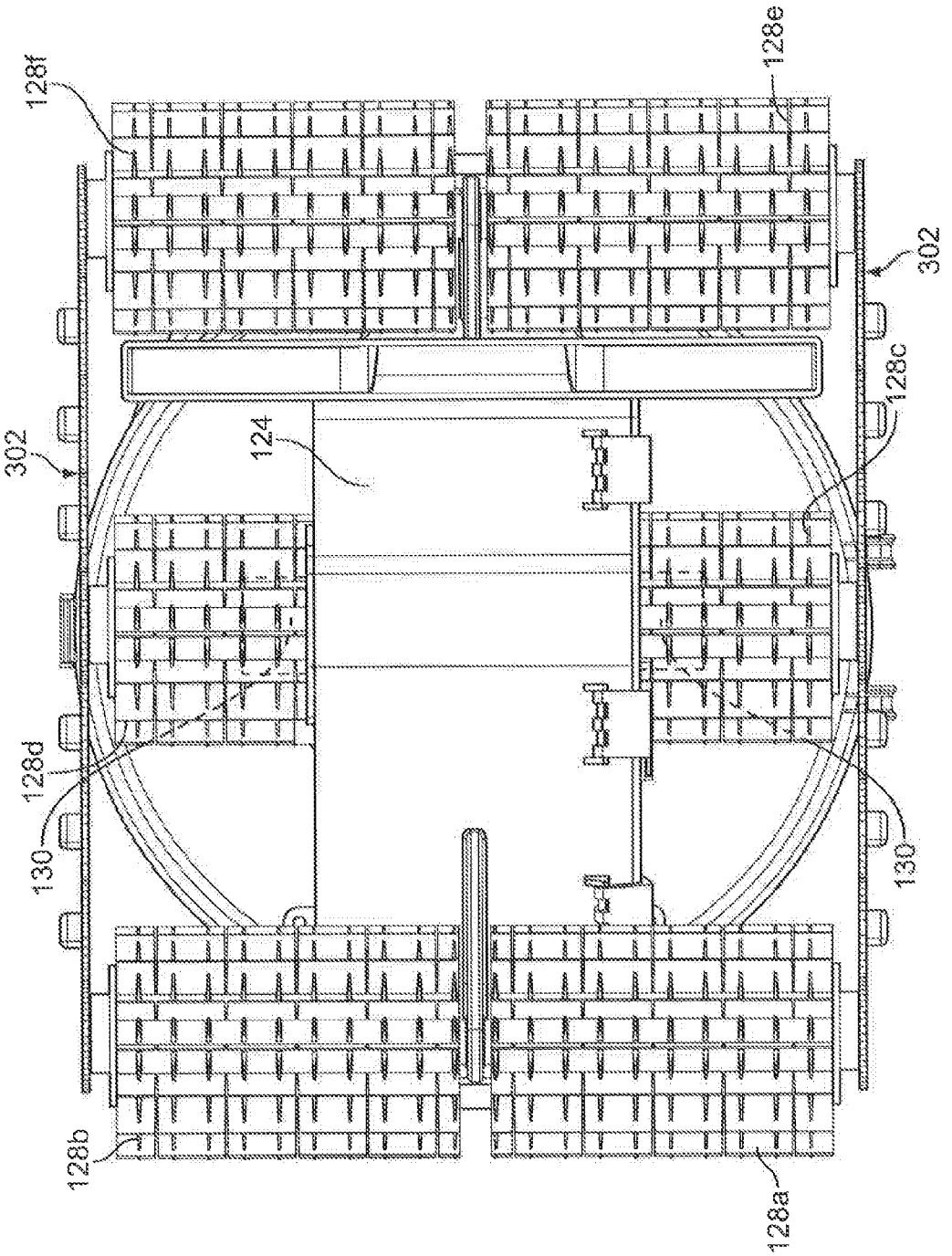

FIG. 19

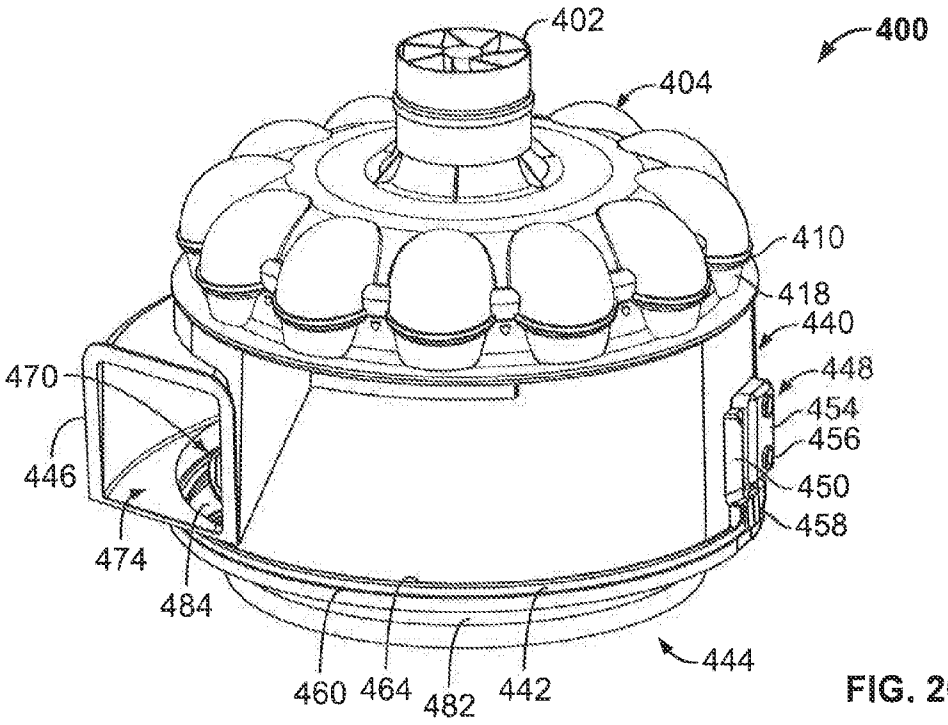
402
400
404
410
418
440
448
454
456
450
458
470
446
474
484
460
464
482
442
444

FIG. 20

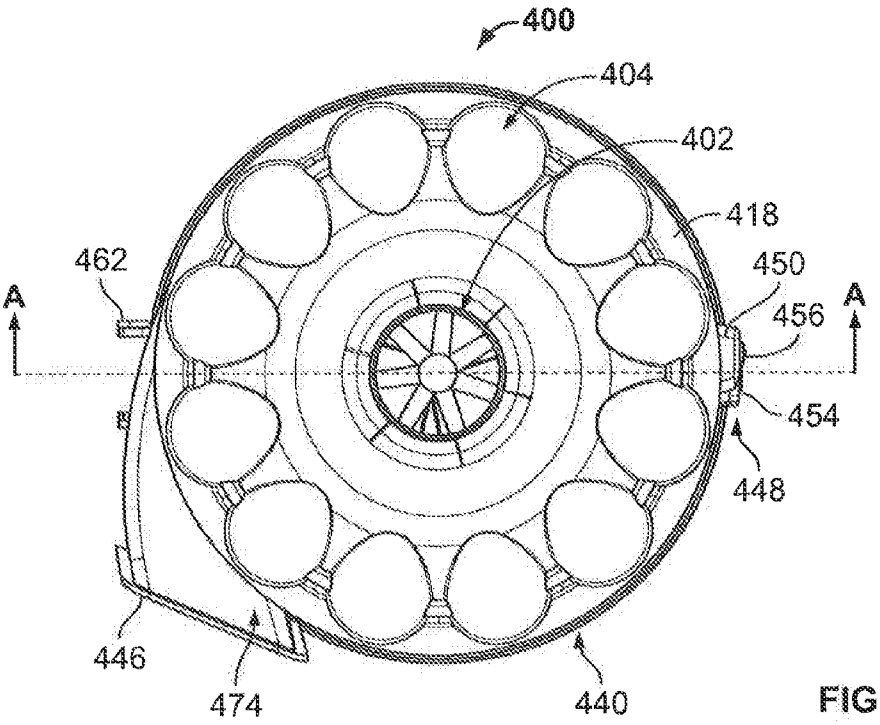
400
404
402
418
462
450
A
A
456
454
448
446
474
440

FIG. 21

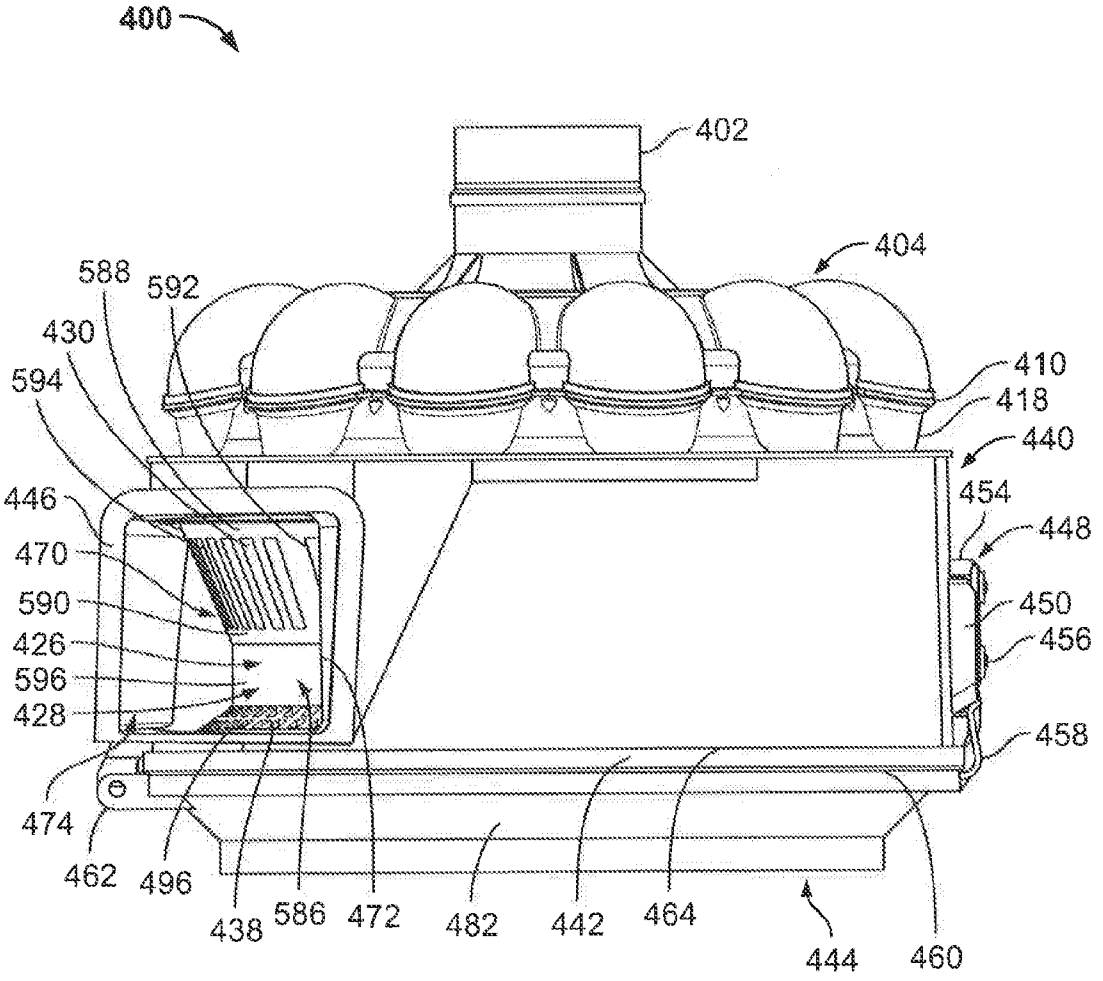
400
402
404
588
592
430
594
410
418
440
446
454
448
470
590
450
426
456
596
428
458
474
462
496
438
586
472
482
442
464
444
460

FIG. 22

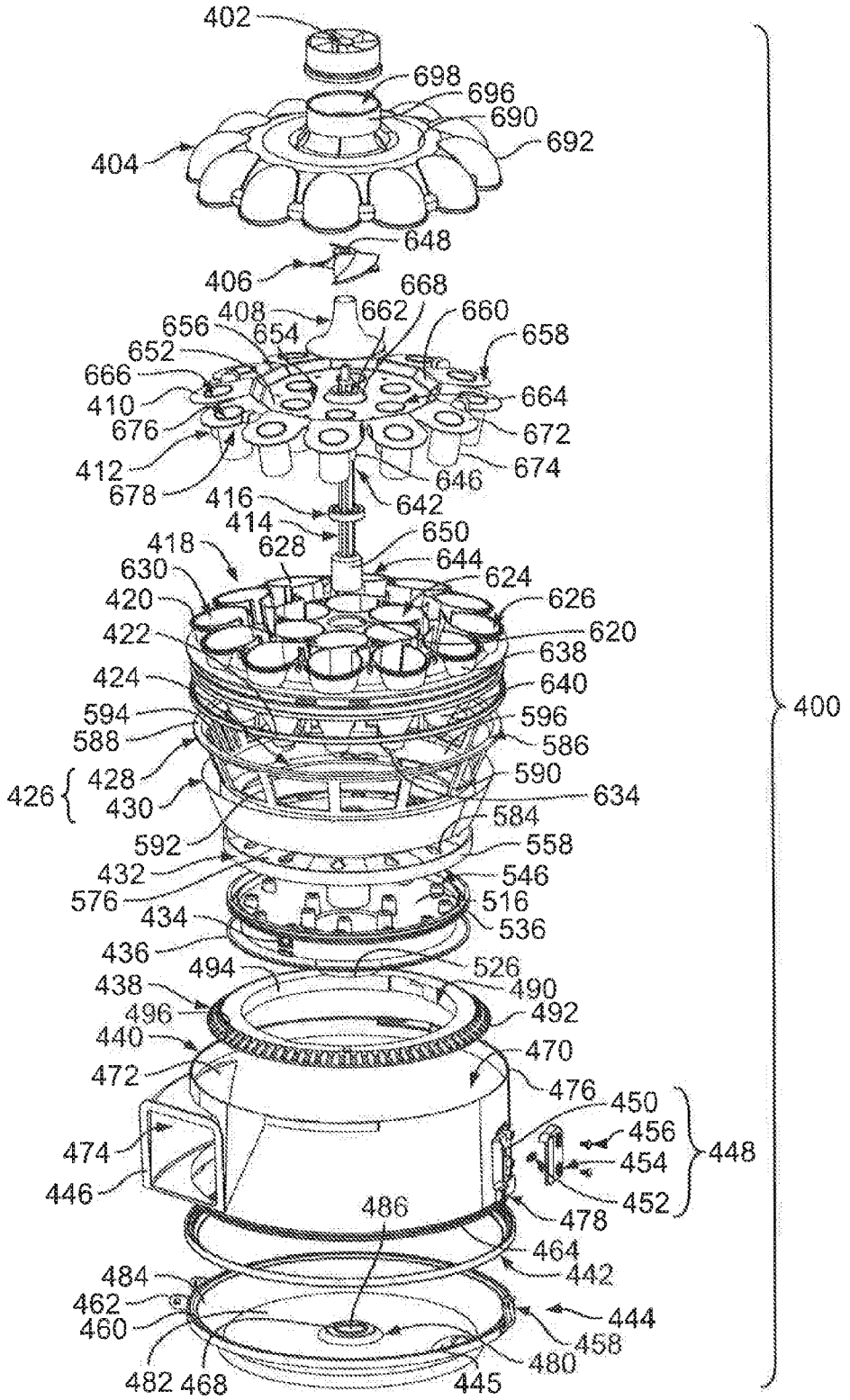
402
698
696
690
692
404
648
406
668
408
662
660
656
654
658
652
666
664
410
672
676
674
412
646
678
642
416
650
414
628
644
418
624
630
626
420
620
422
638
640
424
596
594
586
588
590
426
428
634
430
584
592
558
432
546
576
516
434
536
436
526
494
490
438
492
496
470
440
476
472
450
456
474
454
448
452
446
478
486
464
484
442
462
444
460
458
480
482
468
445
400

FIG. 23

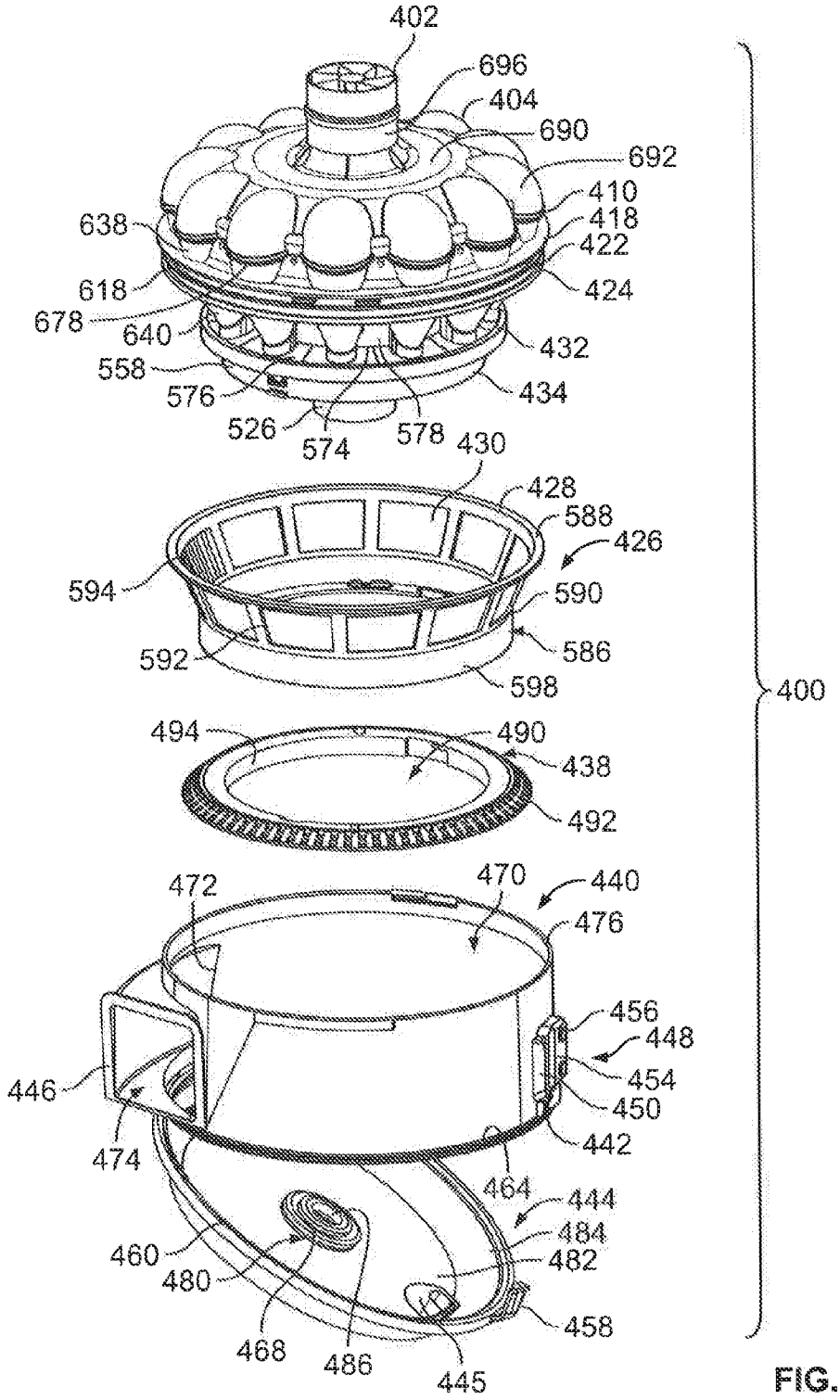
402
696
404
690
692
410
418
422
424
638
618
678
640
432
558
576
434
526
574
578
430
428
588
426
594
590
592
586
598
400
494
490
438
492
472
470
440
476
456
448
454
450
446
474
442
464
444
484
460
482
480
458
468
486
445

FIG. 24

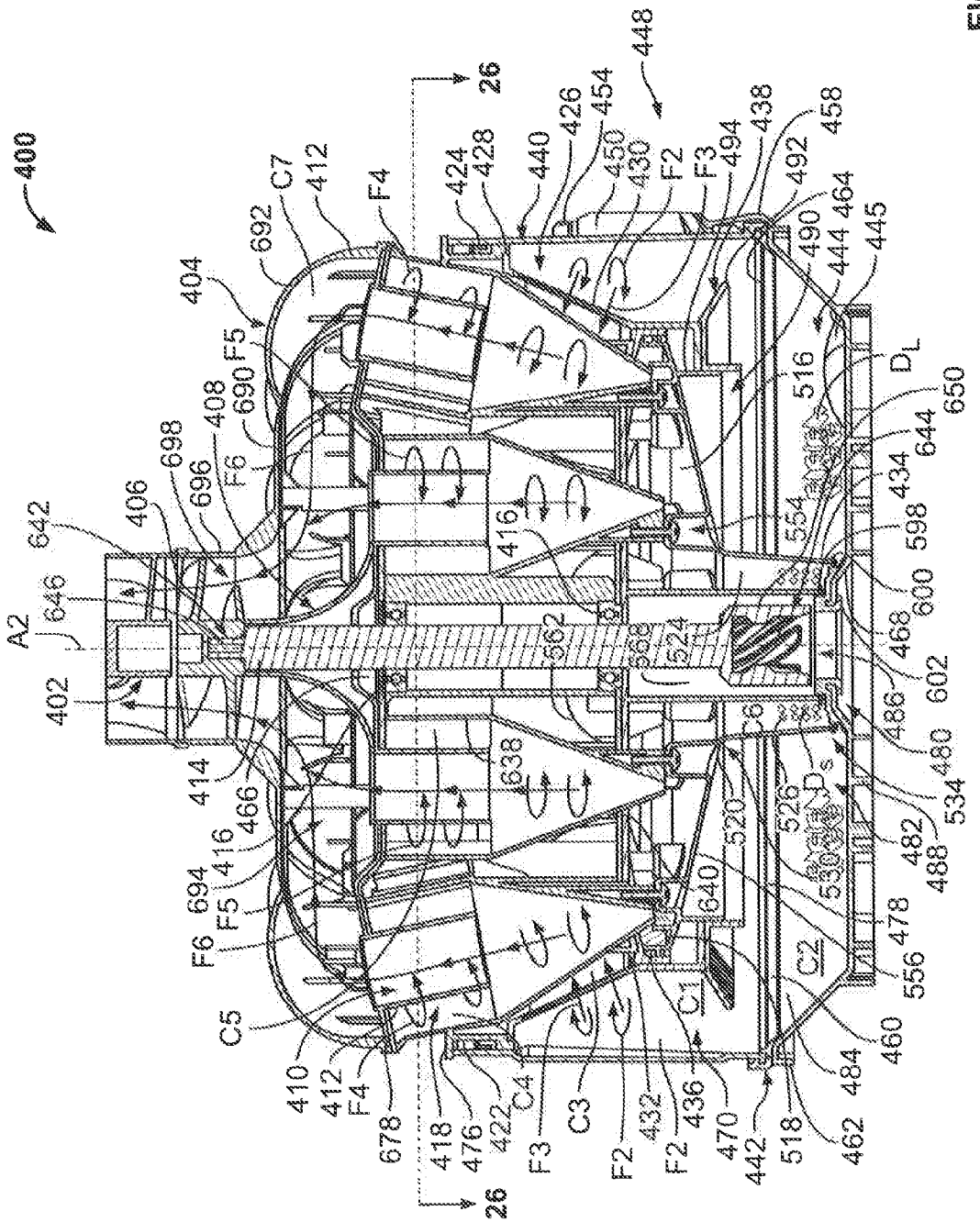
400
A2
402
404
406
408
410
412
414
416
418
422
424
426
428
430
432
434
436
438
440
442
444
445
446
448
450
454
458
460
462
464
466
468
470
476
478
480
482
484
486
488
490
492
494
516
518
520
524
526
530
534
556
558
562
568
598
600
602
640
642
644
646
650
678
690
692
694
696
698
C1
C2
C3
C4
C5
C6
C7
F2
F3
F4
F5
F6
D_L
D_S
26

FIG. 25

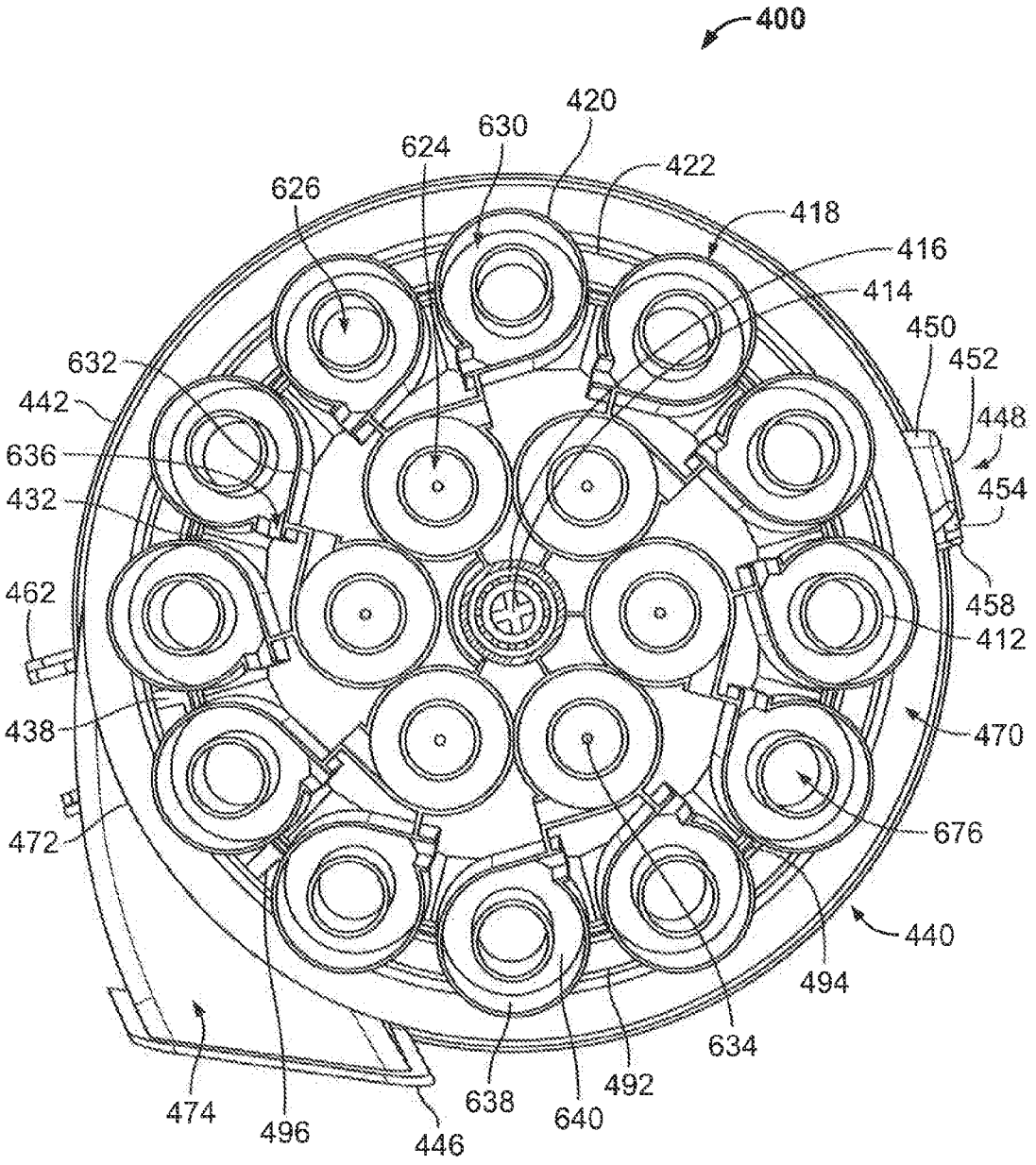
400
420
630
624
422
626
418
416
414
450
452
632
442
448
636
454
432
462
458
412
438
470
472
676
440
494
634
492
638
640
474
496
446

FIG. 26

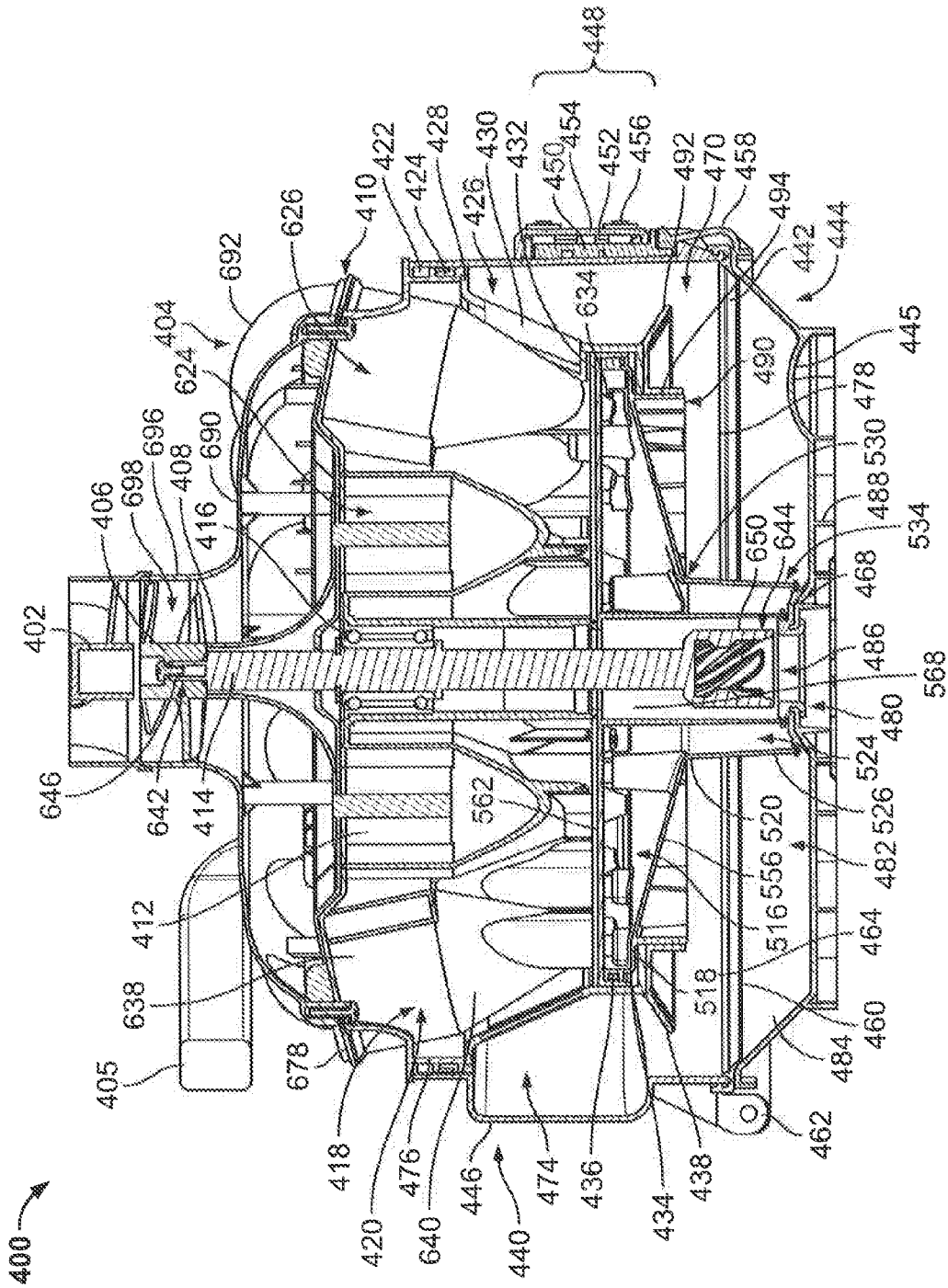
400
402
404
405
406
408
410
412
414
416
418
420
422
424
426
428
430
432
434
436
438
440
442
444
445
446
448
450
452
454
456
458
460
462
464
468
470
474
476
478
480
482
484
486
488
490
492
494
516
518
520
524
526
530
534
556
562
568
624
626
634
638
640
642
644
646
650
678
690
692
696
698

FIG. 27

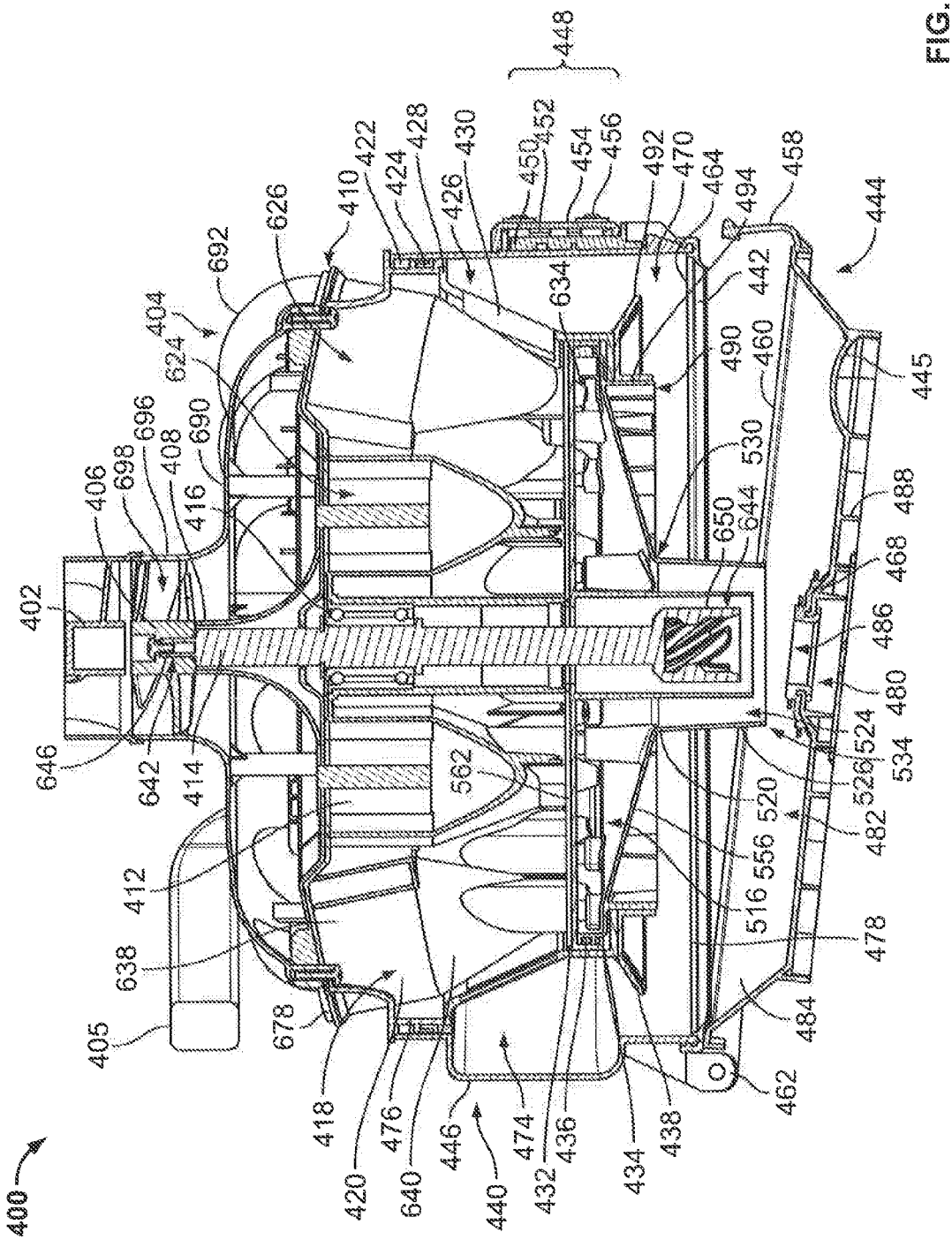
400
402
404
405
406
408
410
412
414
416
418
420
422
424
426
428
430
432
434
436
438
440
442
444
445
446
448
450
452
454
456
458
460
462
464
470
474
476
478
480
482
484
486
488
490
492
494
520
524
526
530
534
556
562
624
626
634
638
640
642
644
646
650
678
690
692
696
698
468
516

FIG. 28

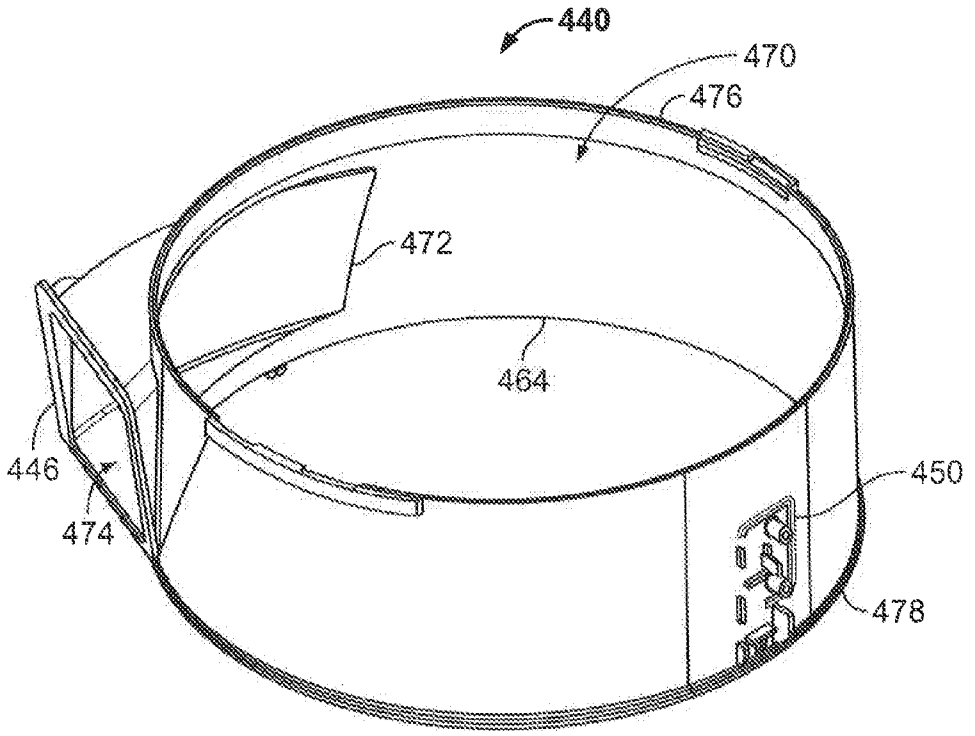

FIG. 29

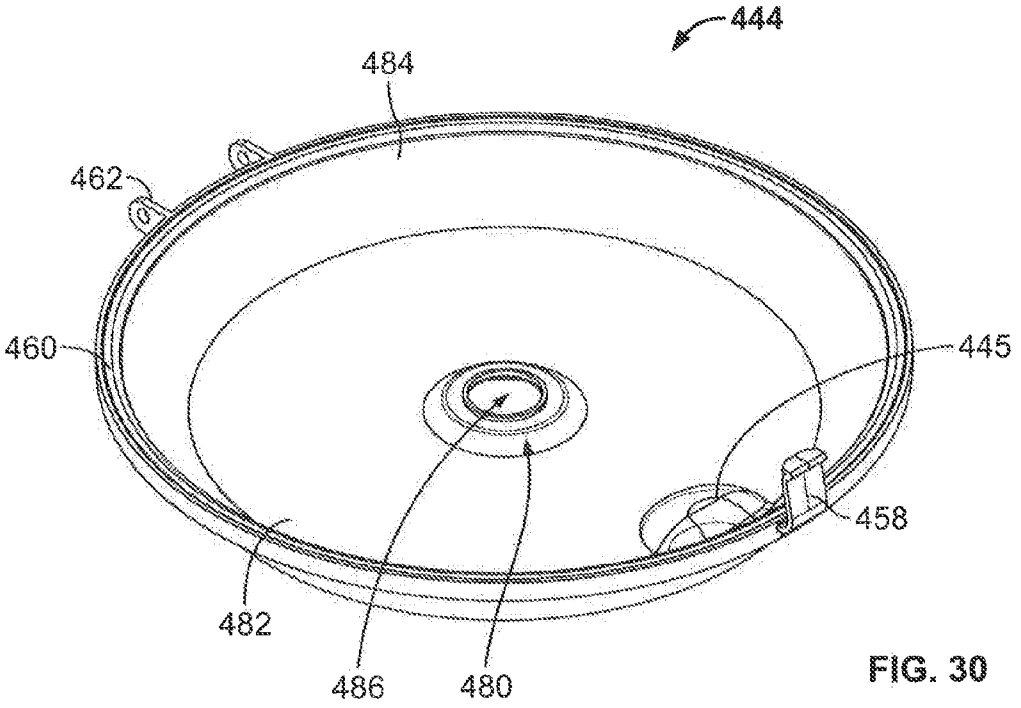

FIG. 30

Date Reçue/Date Received 2022-02-03

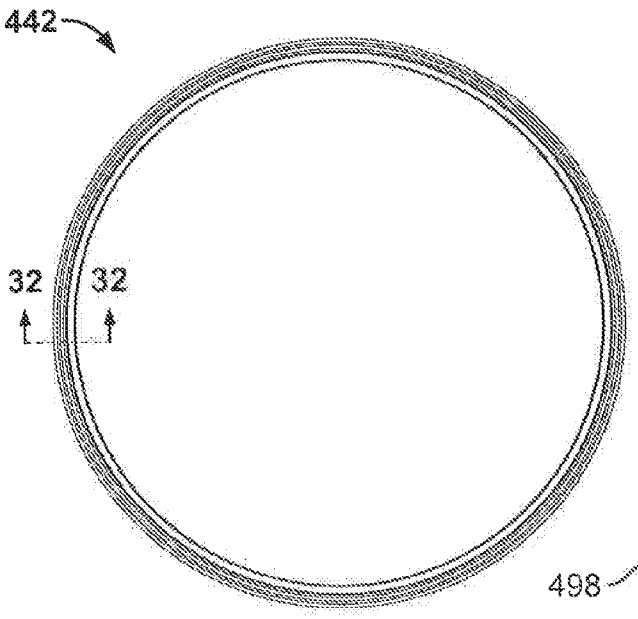

FIG. 31

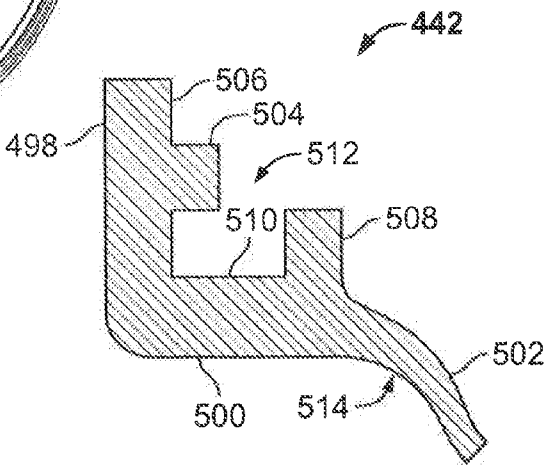

FIG. 32

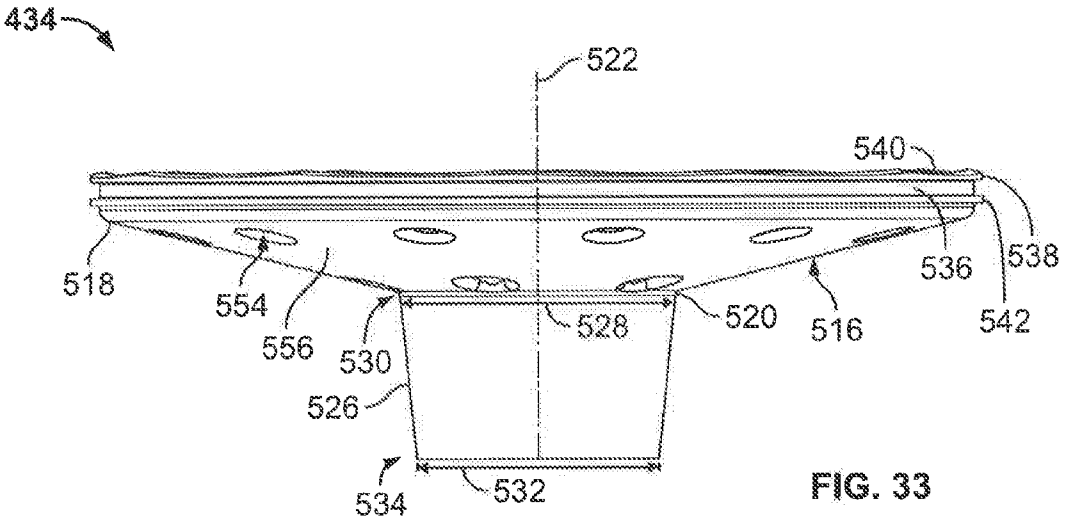

FIG. 33

Date Reçue/Date Received 2022-02-03

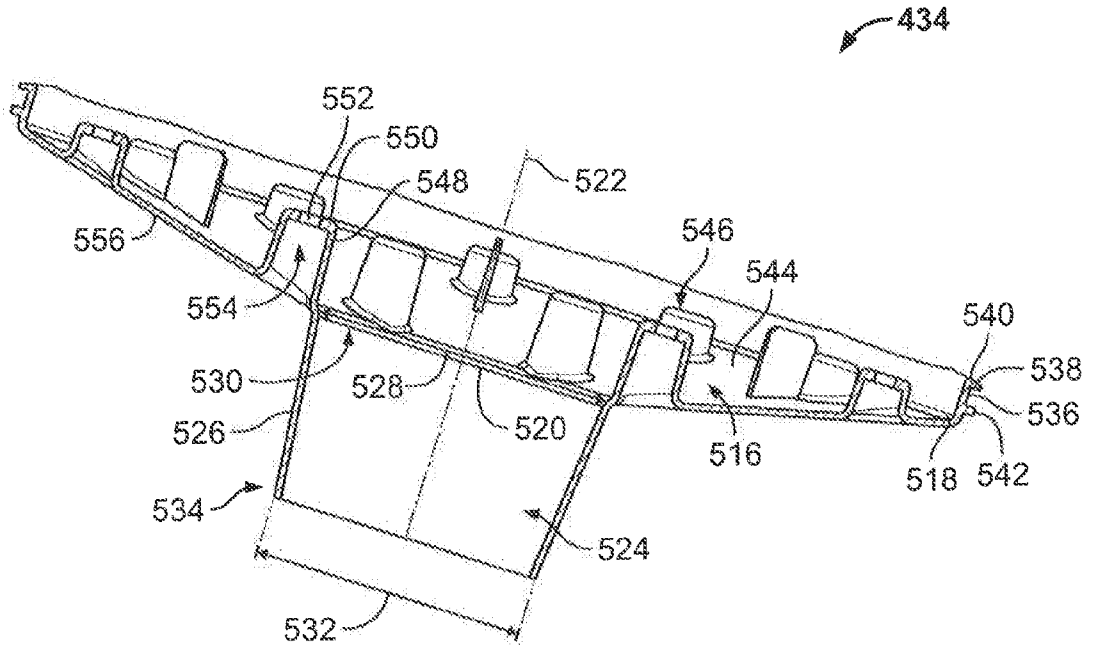
434
552
550
548
522
556
546
544
554
540
538
530
528
536
526
520
516
518
542
534
524
532

FIG. 34

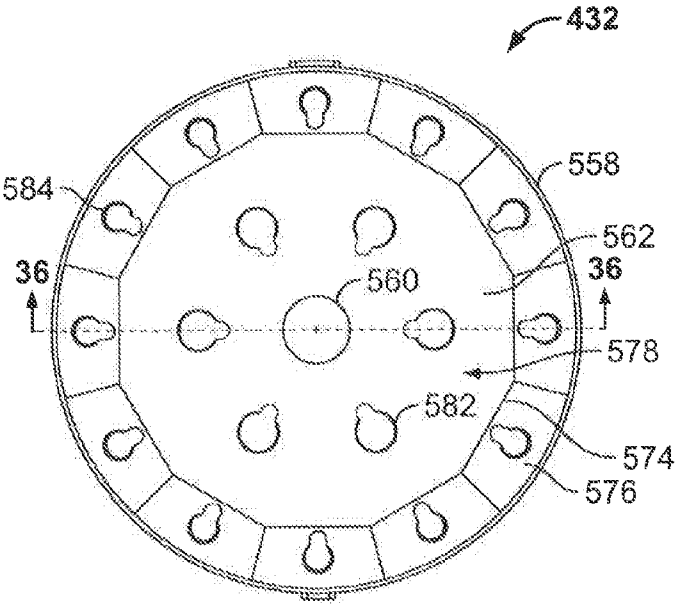
432
584
558
562
36
560
36
578
582
574
576

FIG. 35

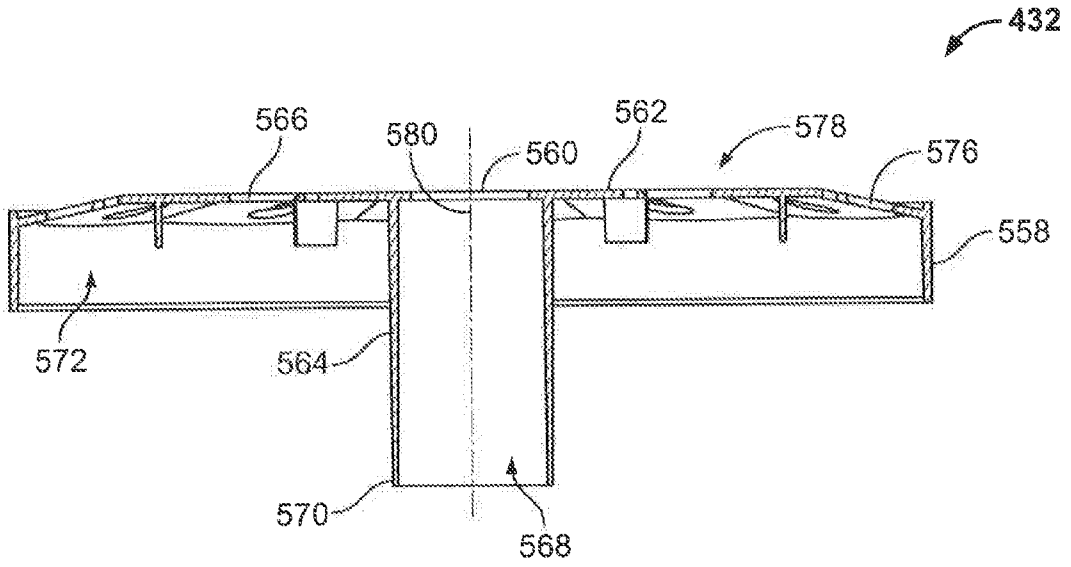
432
566
580
562
578
576
560
558
572
564
570
568

FIG. 36

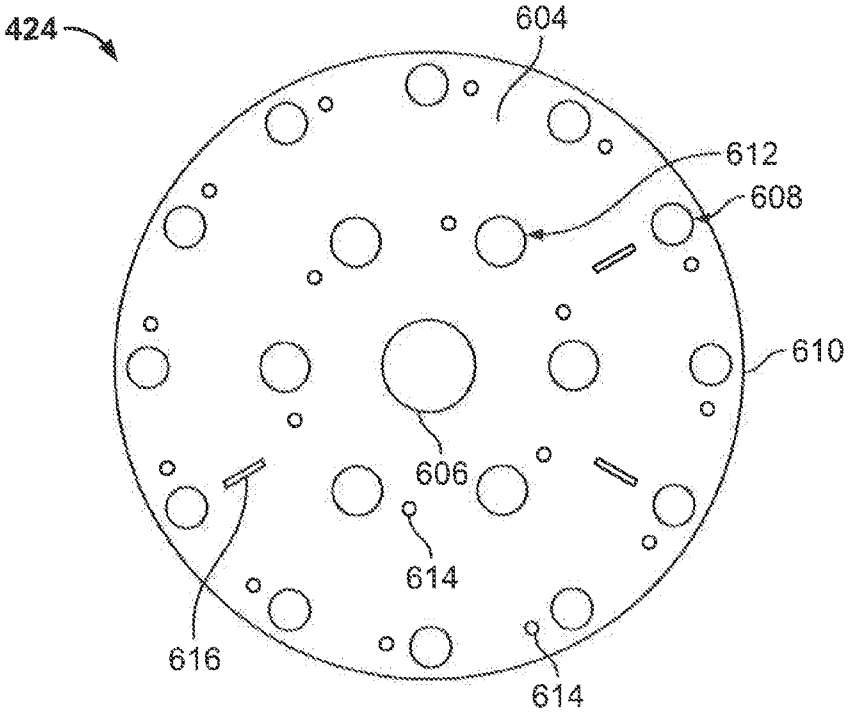
424
604
612
608
610
606
614
616
614

FIG. 37

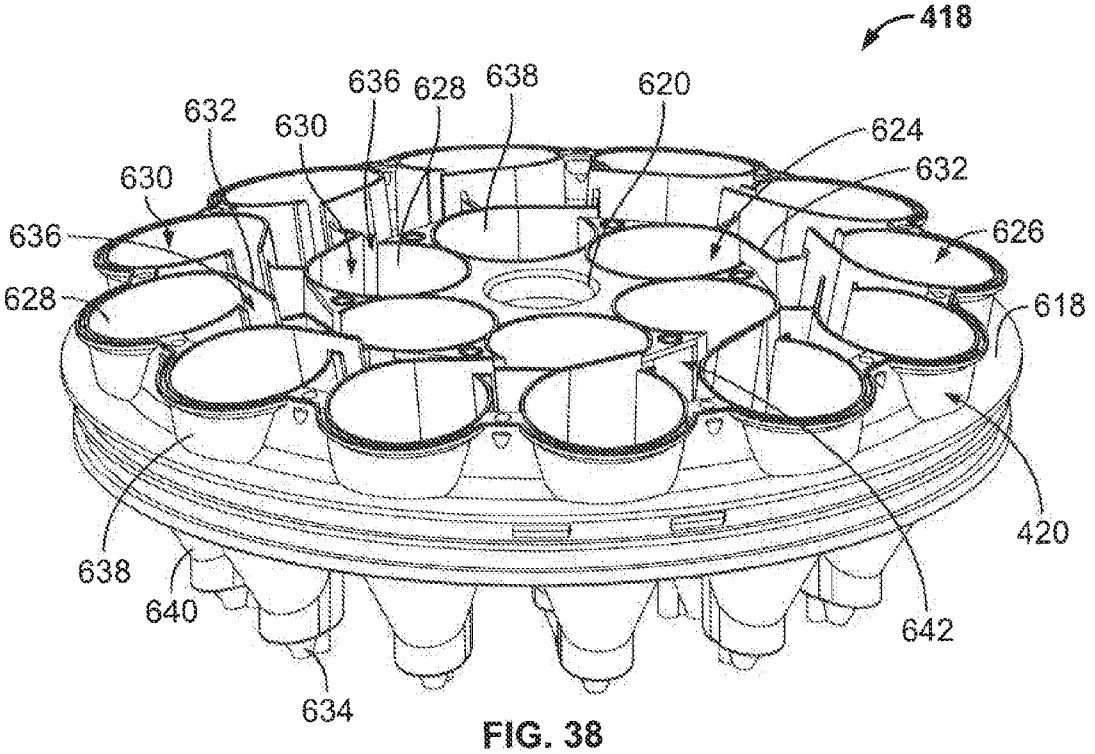

FIG. 38

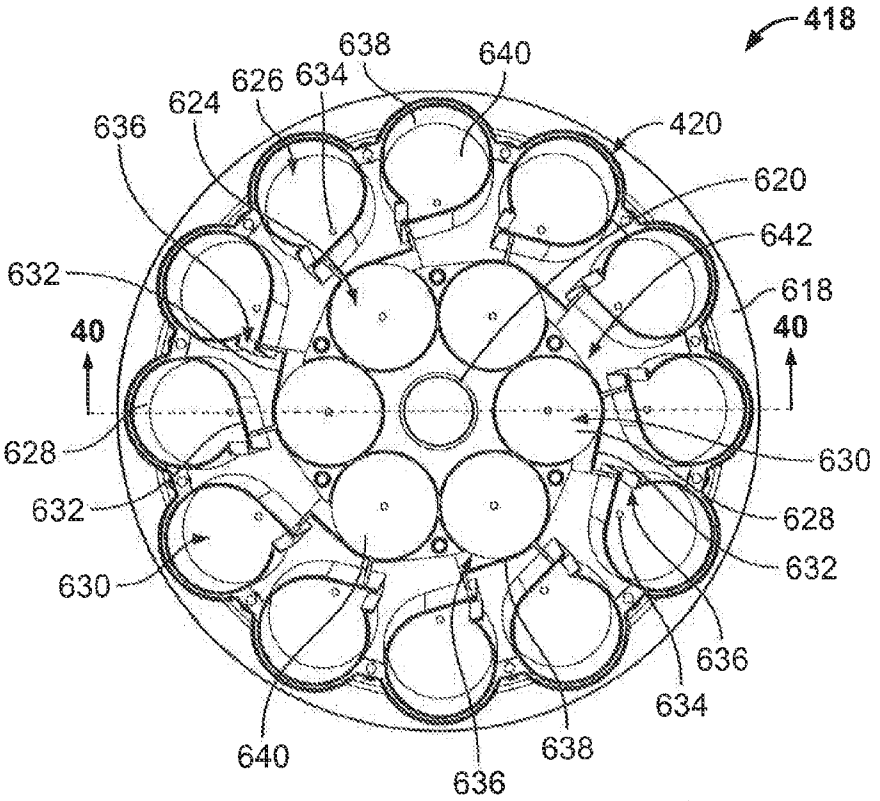

FIG. 39

Date Reçue/Date Received 2022-02-03

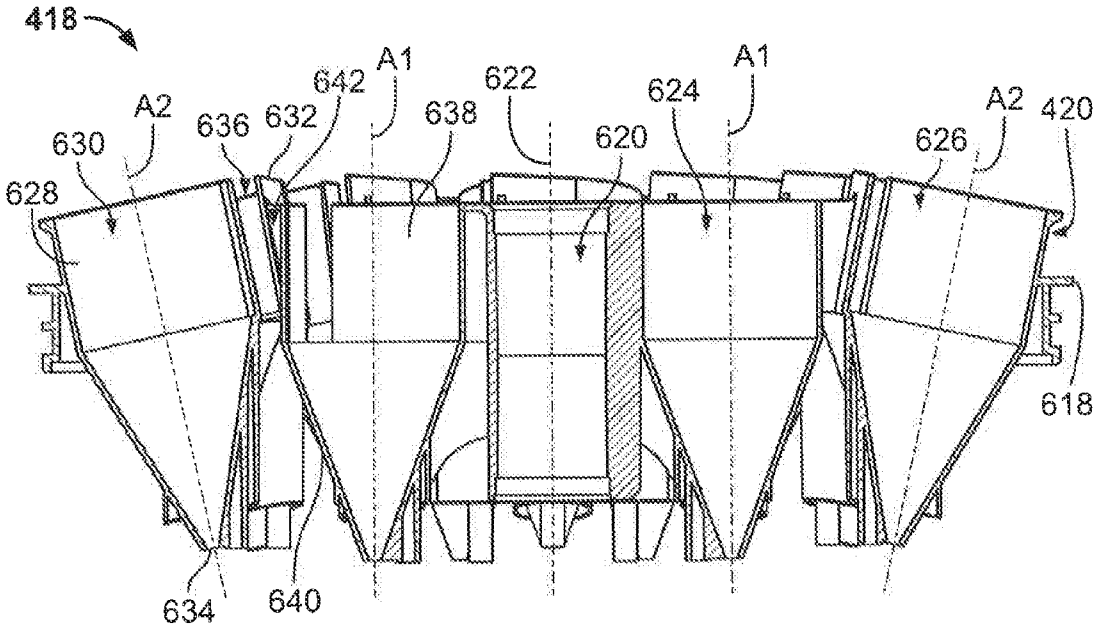

FIG. 40

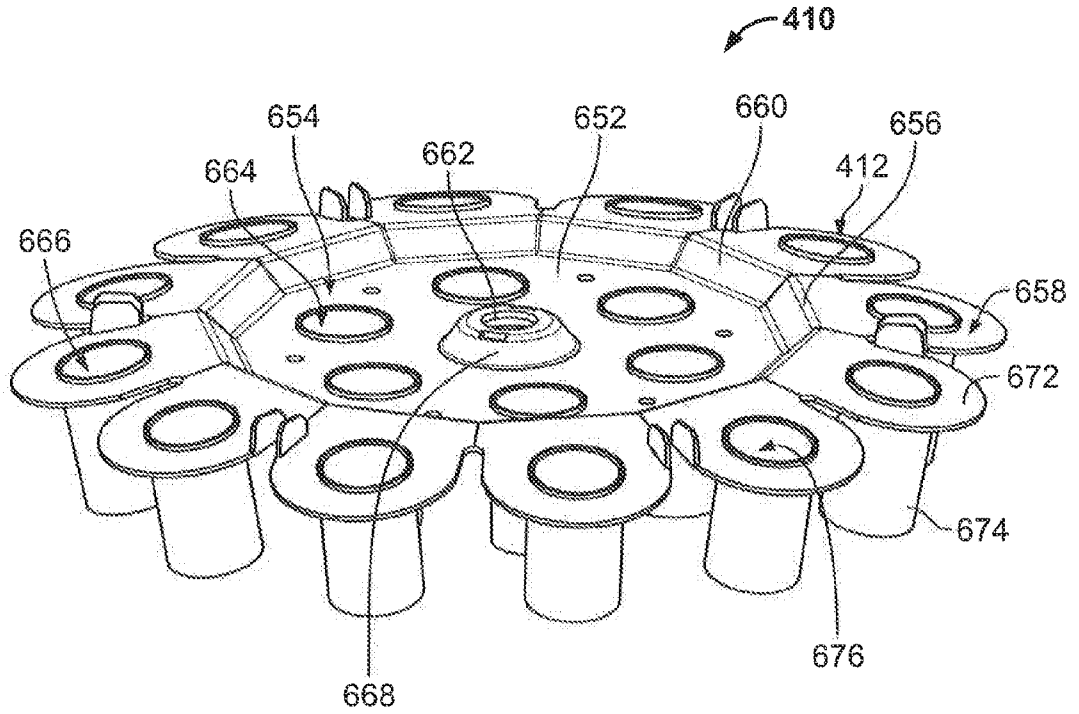

FIG. 41

Date Reçue/Date Received 2022-02-03

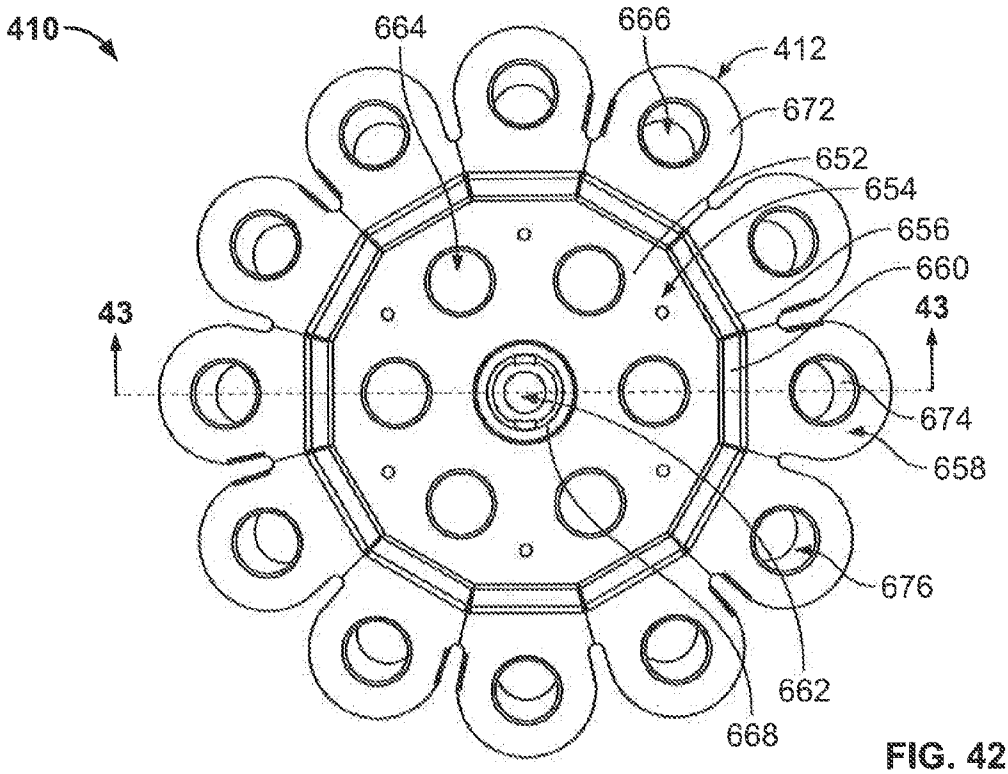
410
664
666
412
672
652
654
656
660
43
43
674
658
676
662
668

FIG. 42

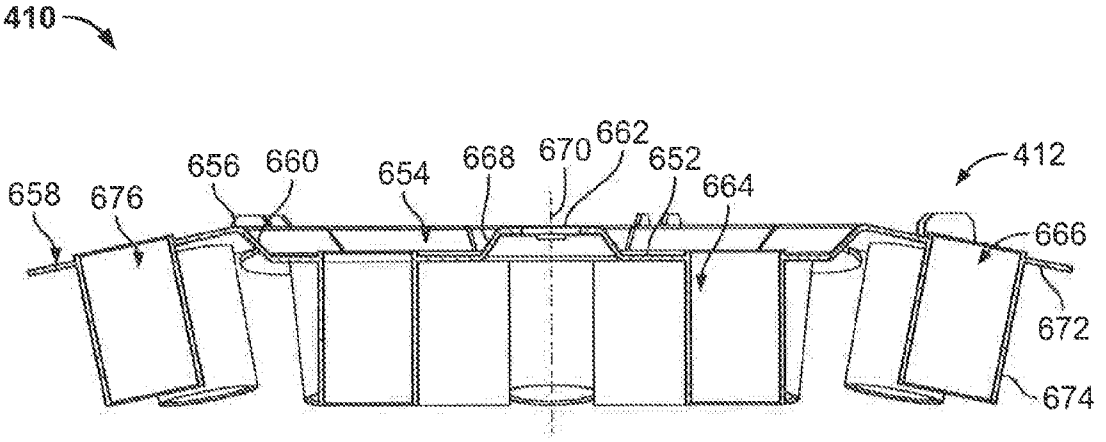
410
658
676
656
660
654
668
670
662
652
664
412
666
672
674

FIG. 43

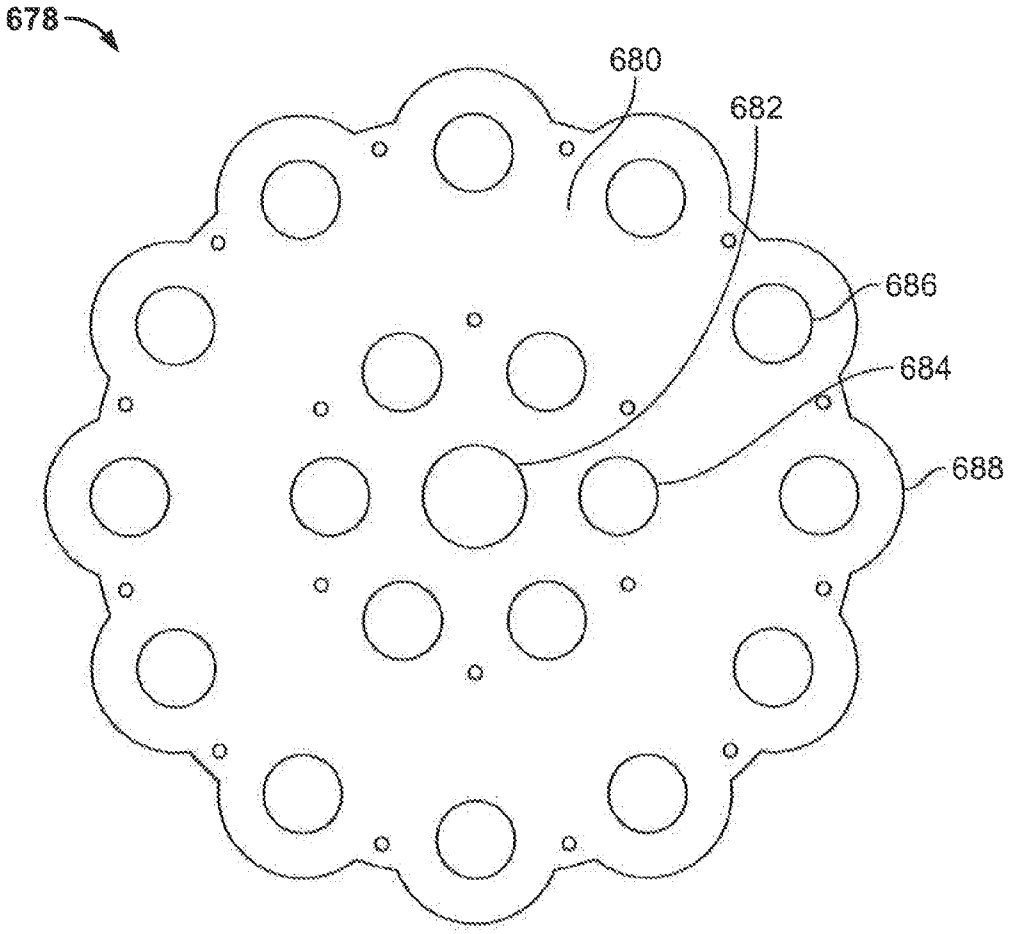

FIG. 44

Date Reçue/Date Received 2022-02-03

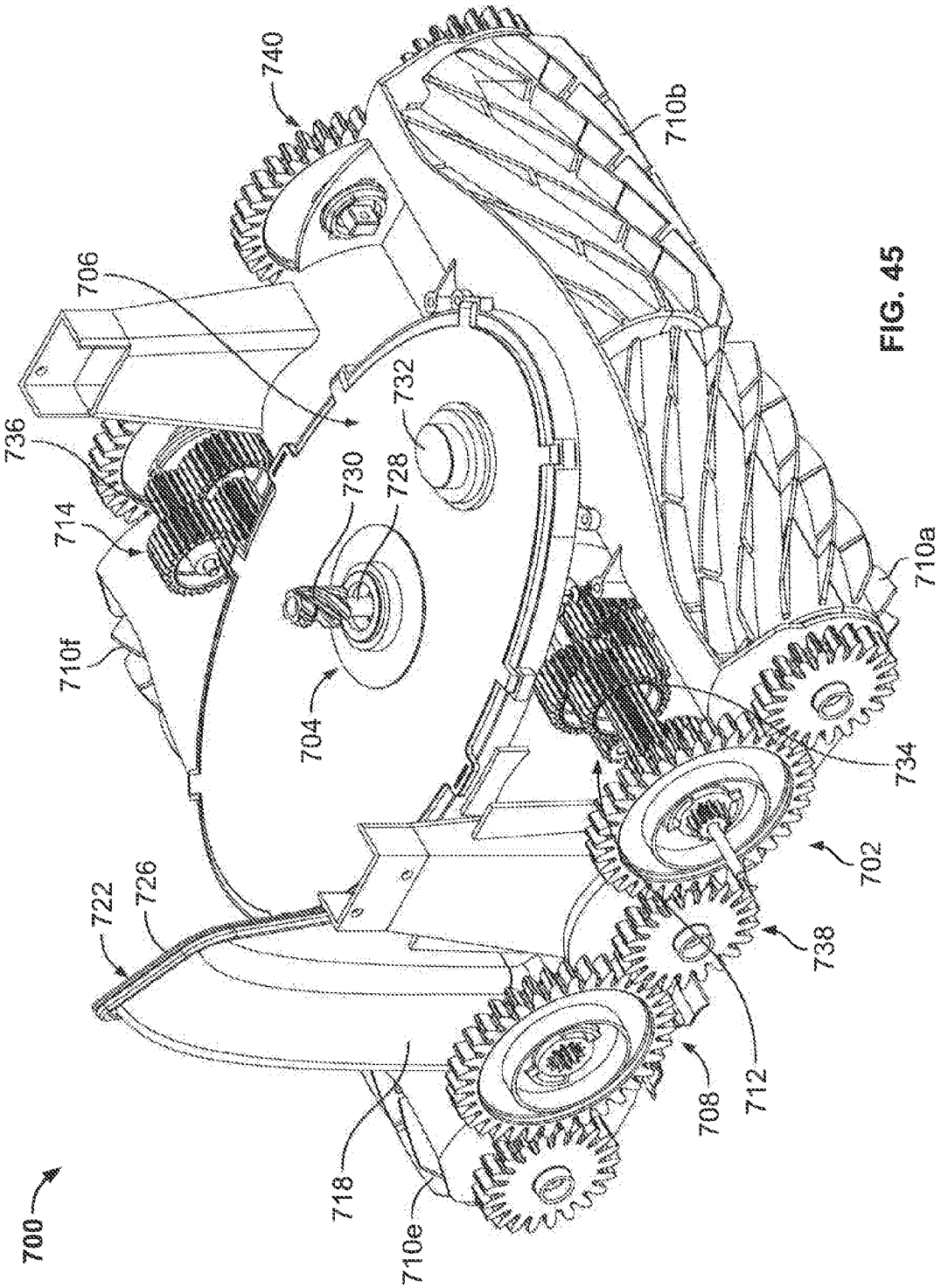
700
702
704
706
708
710a
710b
710e
710f
712
714
718
722
726
728
730
732
734
736
738
740

FIG. 45

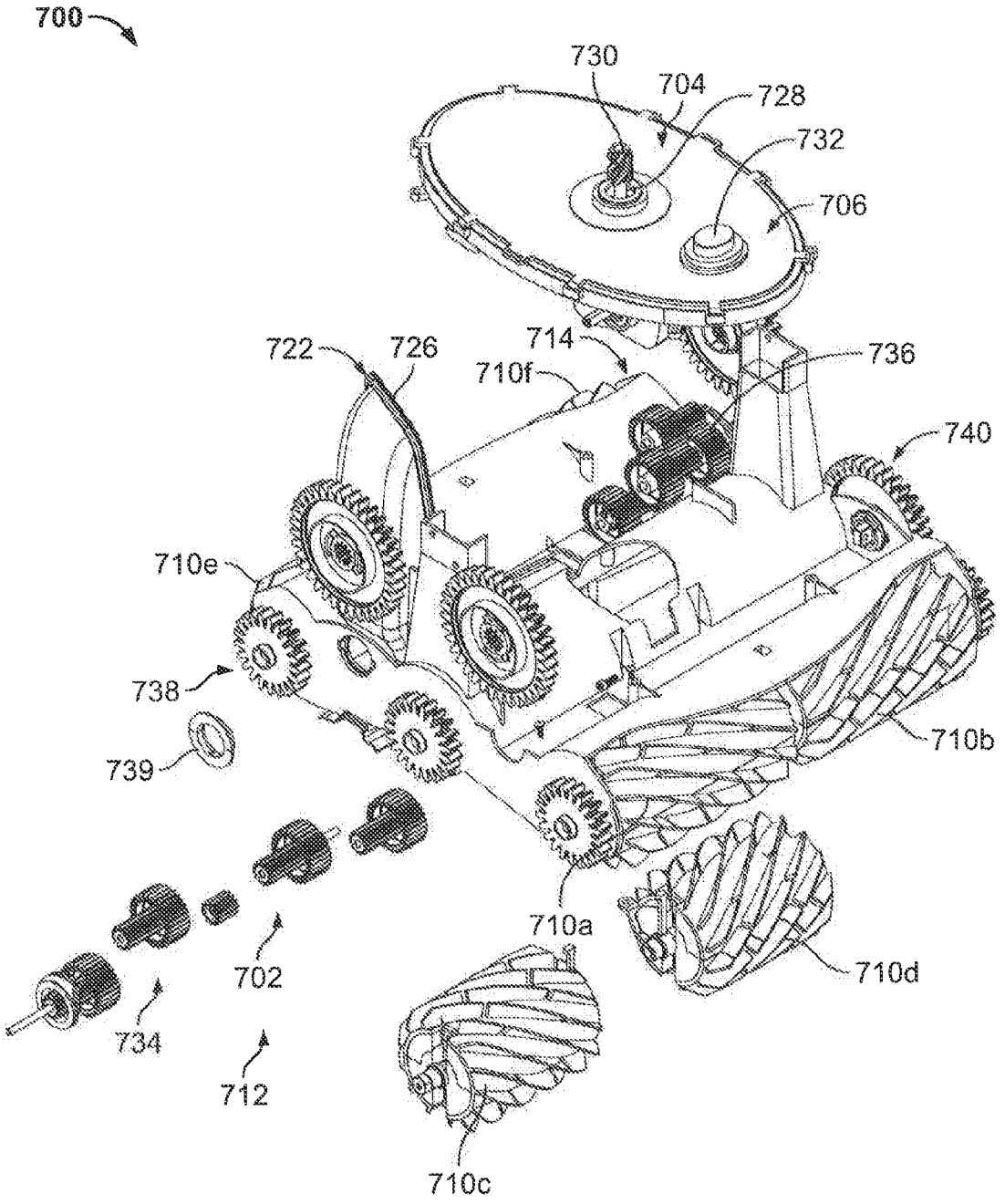
700
730
704
728
732
706
722
726
714
710f
736
740
710e
738
739
710b
710a
710d
702
734
712
710c

FIG. 46

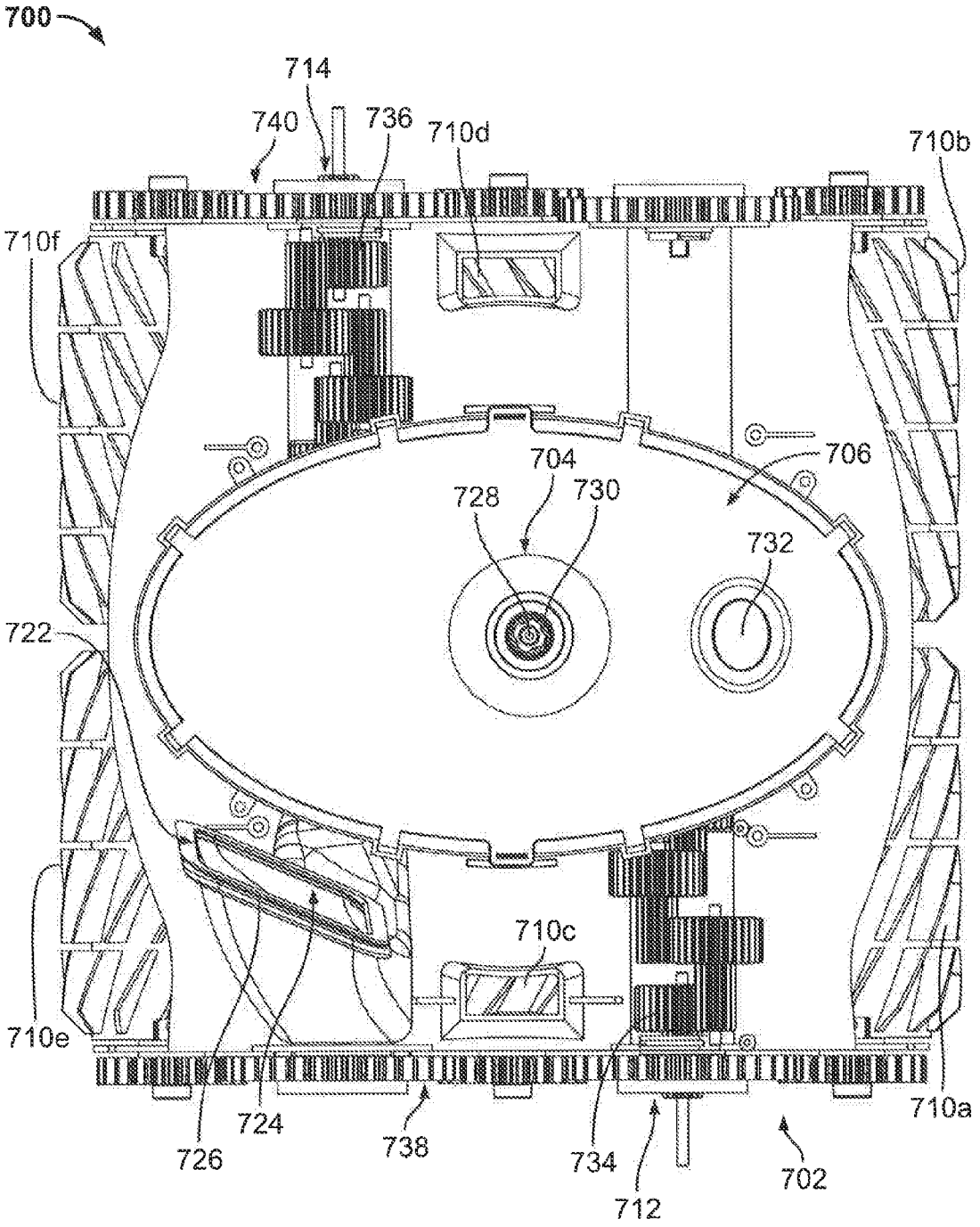
700
714
740
736
710d
710b
710f
706
704
728
730
732
722
710c
710e
710a
724
726
738
734
712
702

FIG. 47

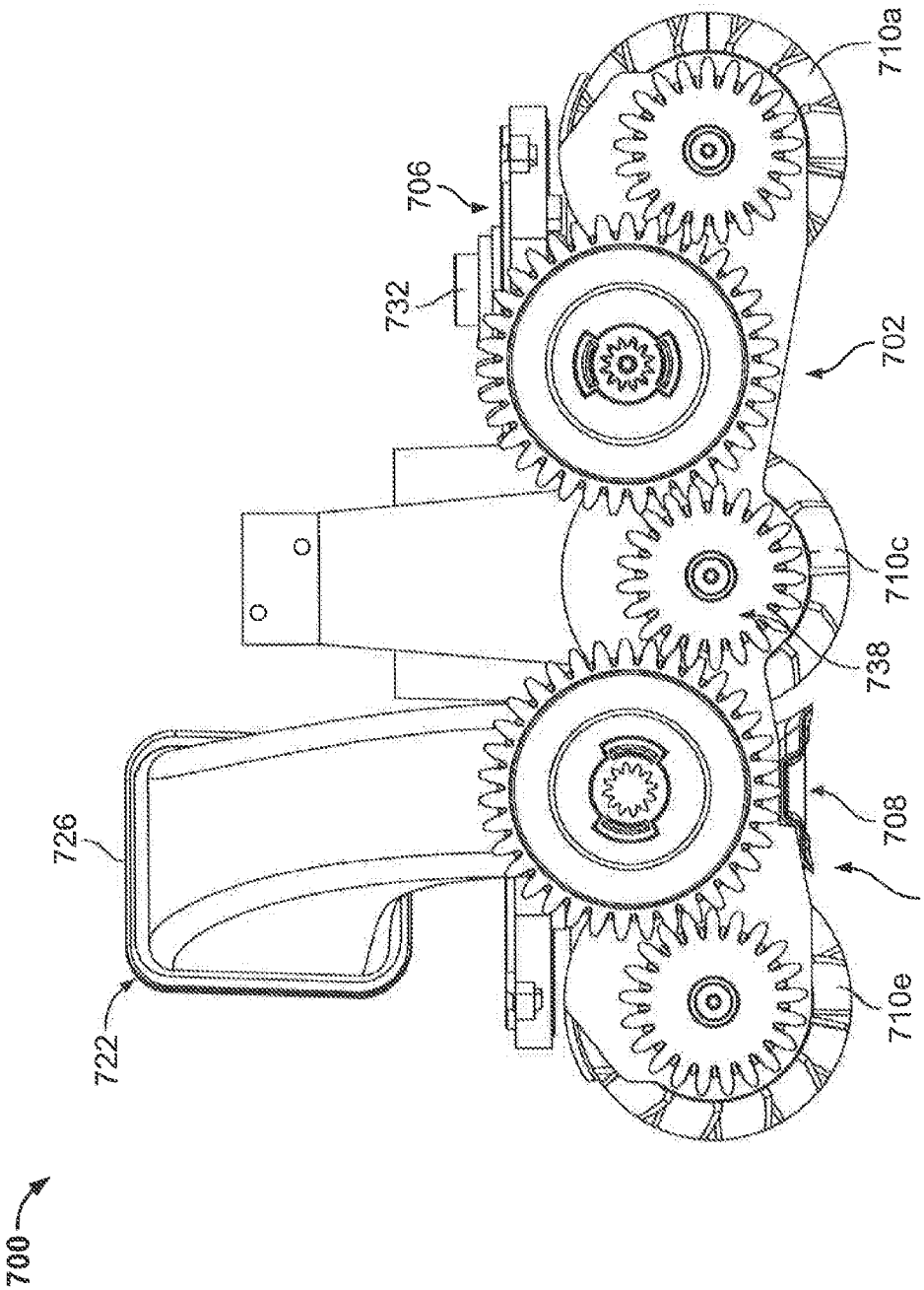

FIG. 48

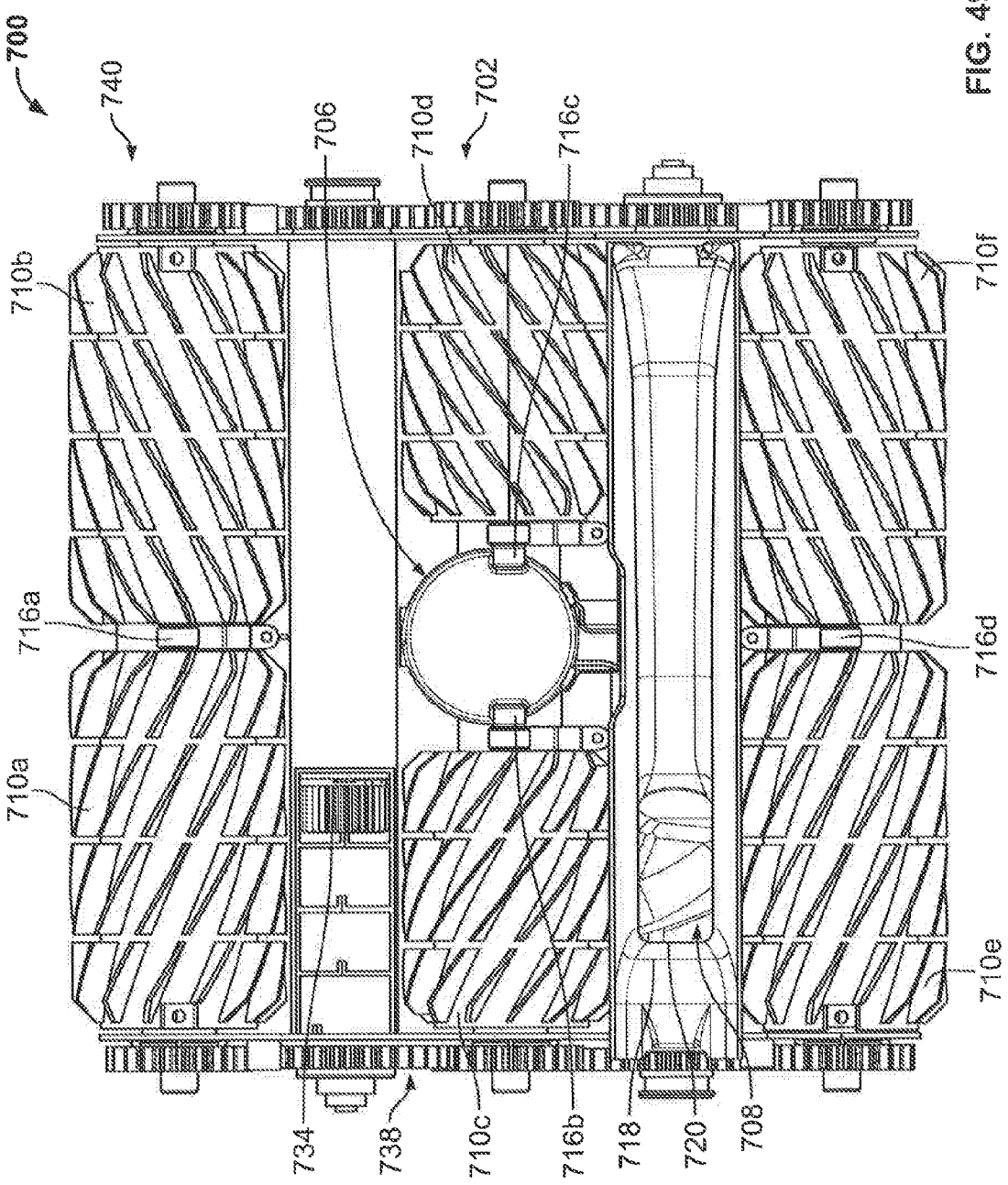
700
740
706
710d
702
716c
710b
710f
716a
716d
710a
710e
734
738
710c
716b
718
720
708

FIG. 49

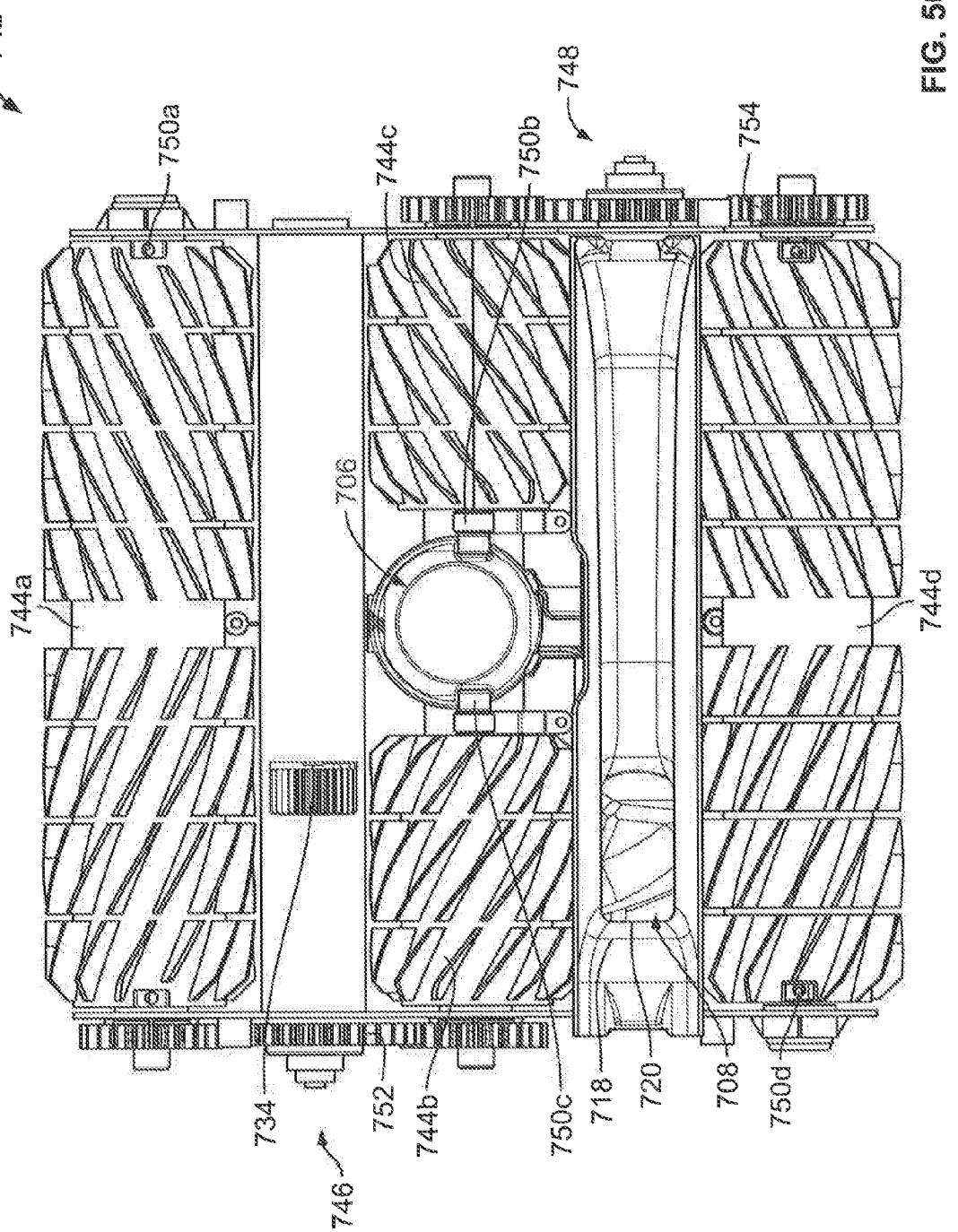
742
750a
744c
750b
748
754
706
744a
744d
734
752
744b
750c
718
720
708
750d
746

FIG. 50