(12) UK Patent Application (19) GB (11) 2 435 012 (13) A

(43) Date of A Publication 15.08.2007

(21) Application No: 0602438.4

(22) Date of Filing: 08.02.2006

(71) Applicant(s):
Chih-Ying Chou
2F, No 281-6 Jhongjheng Road,
Jhonghe City, Taipei County, Taiwan

(72) Inventor(s):
Chih-Ying Chou

(74) Agent and/or Address for Service:
Appleyard Lees
15 Clare Road, HALIFAX, West Yorkshire,
HX1 2HY, United Kingdom

(51) INT CL:
B42F 7/08 (2006.01)

(52) UK CL (Edition X):
B6E EDE ED103 ED107

(56) Documents Cited:
JP 090071078 A **US 6945399 B1**
US 6880747 B1 **US 5664724 A**

(58) Field of Search:
UK CL (Edition X) **B6E**
INT CL **A45C, B42F**
Other: **EPODOC, WPI.**

(54) Abstract Title: **Expandable file folder with two box-shaped cases.**

(57) The expandable file has first and second cases 40, 50 between the front and rear sides and an expandable storing part 30. The file holder is stable in a standing position because of the two separated supporting areas formed beneath the two cases. Thus the folder, when placed, will not tend to fall down. The openings of the first and second cases may be on their tops or sides, covered by separate flaps (43, figure 8).

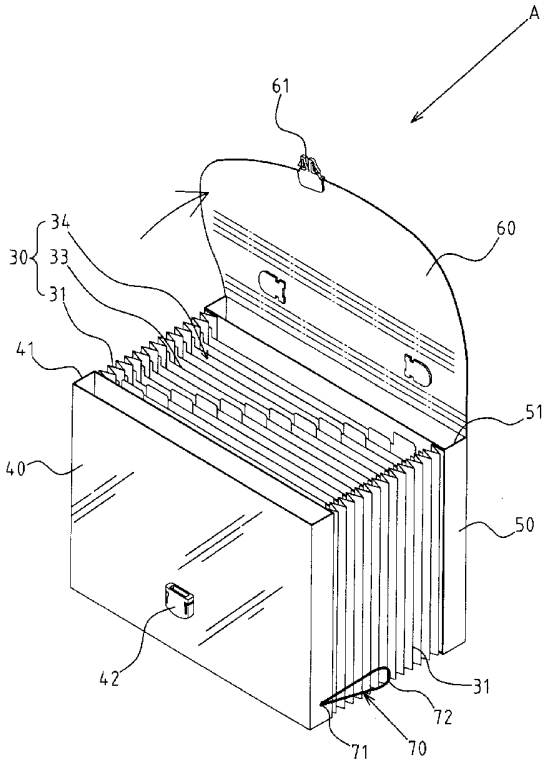

FIG.6

GB 2 435 012 A

Original Printed on Recycled Paper

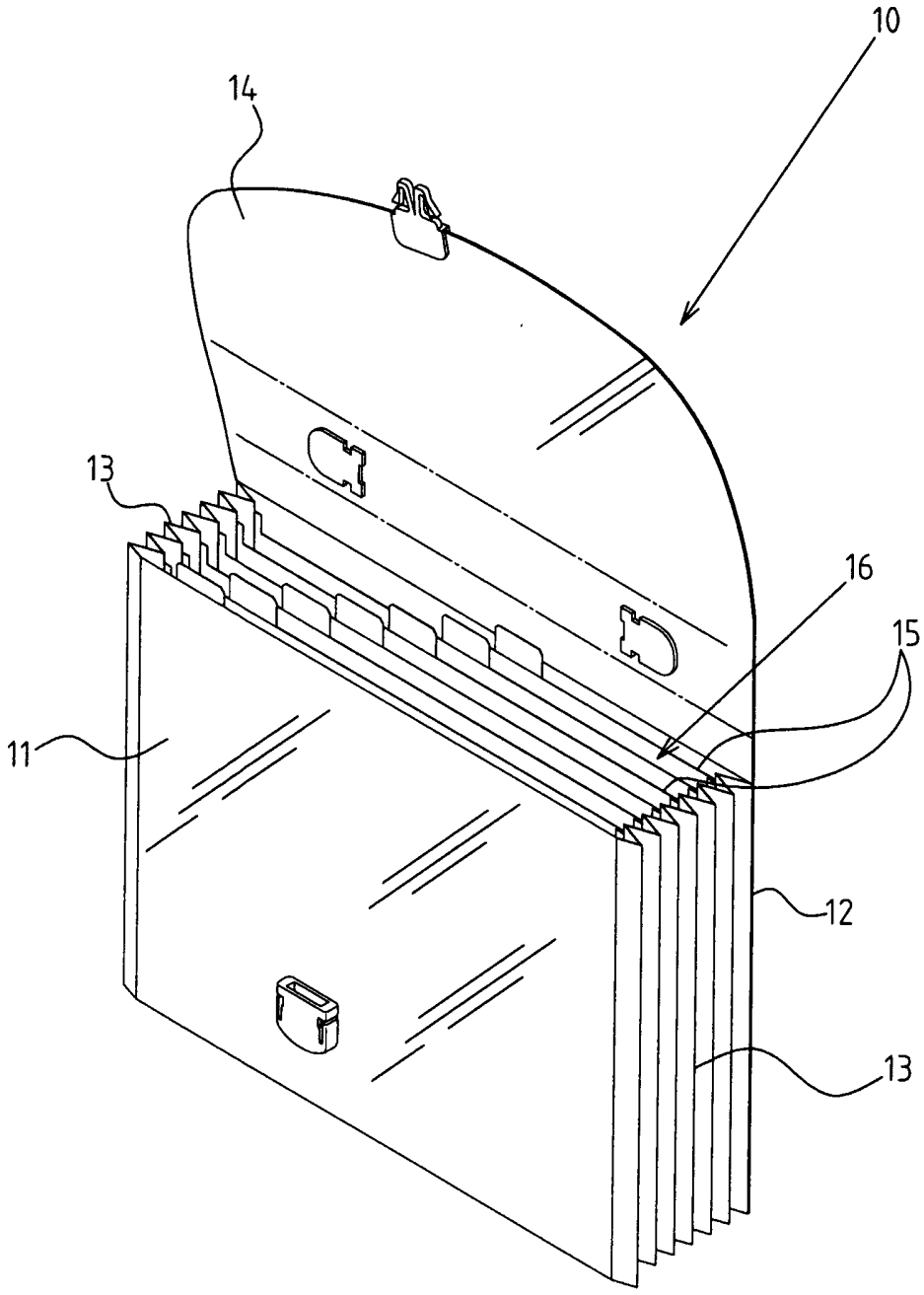

FIG.1 PRIOR ART

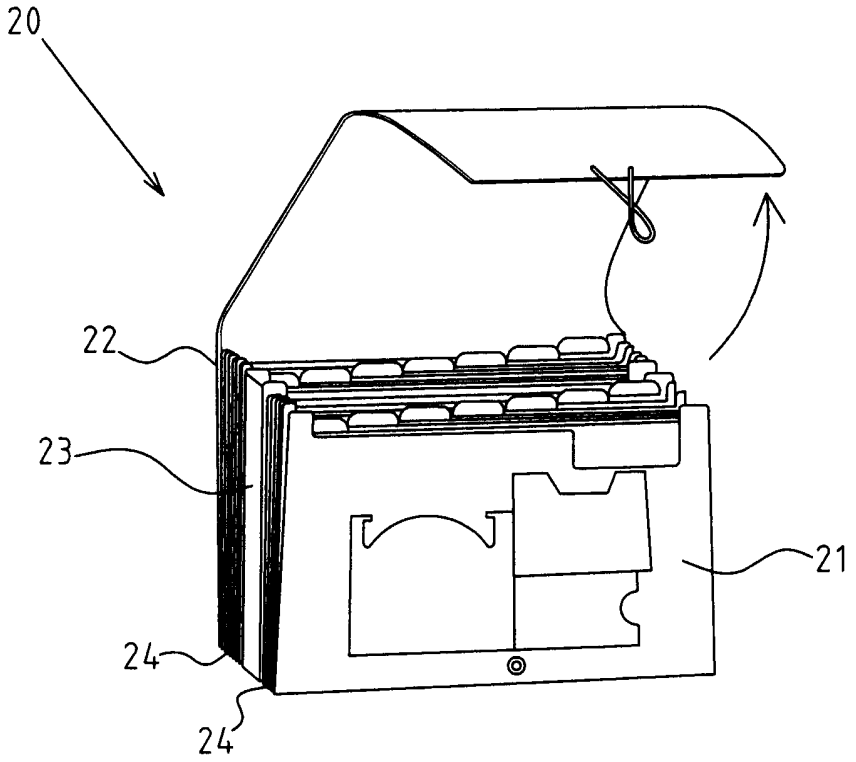

FIG.2 PRIOR ART

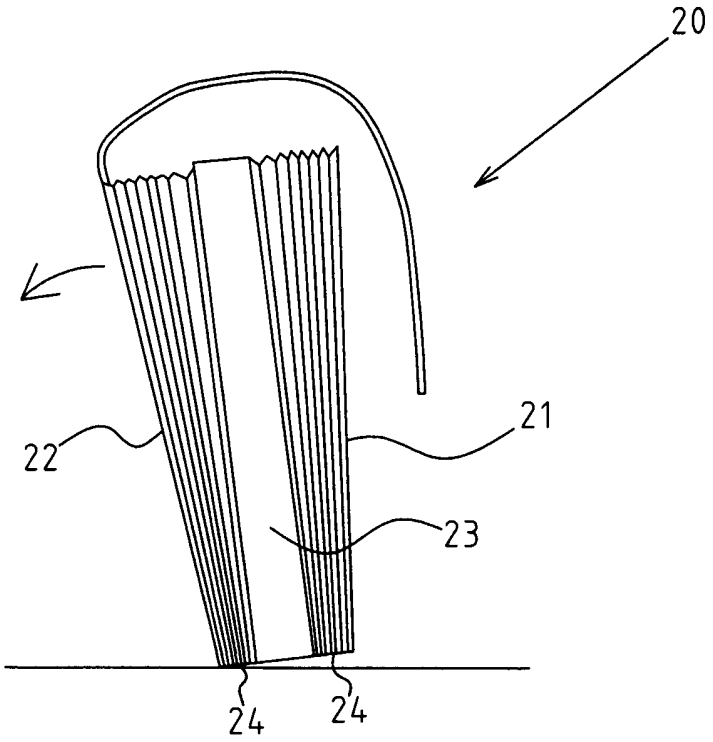

FIG.3 PRIOR ART

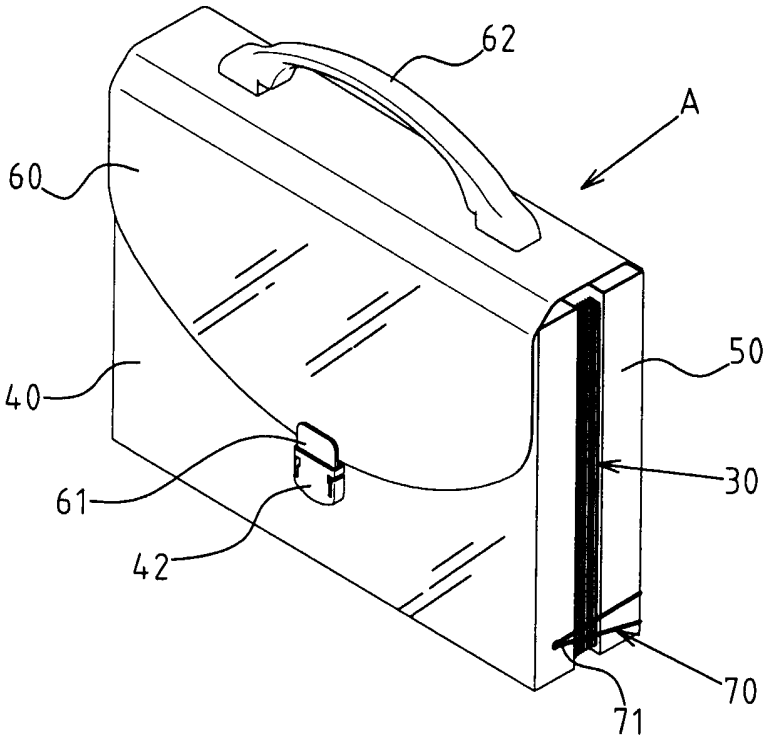

FIG.4

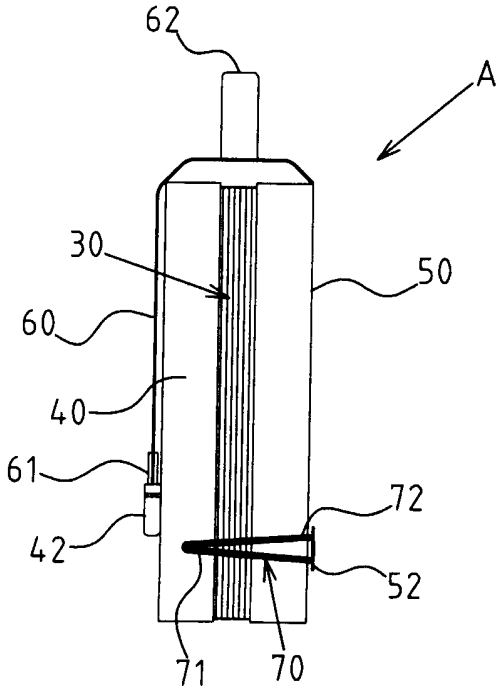

FIG.5

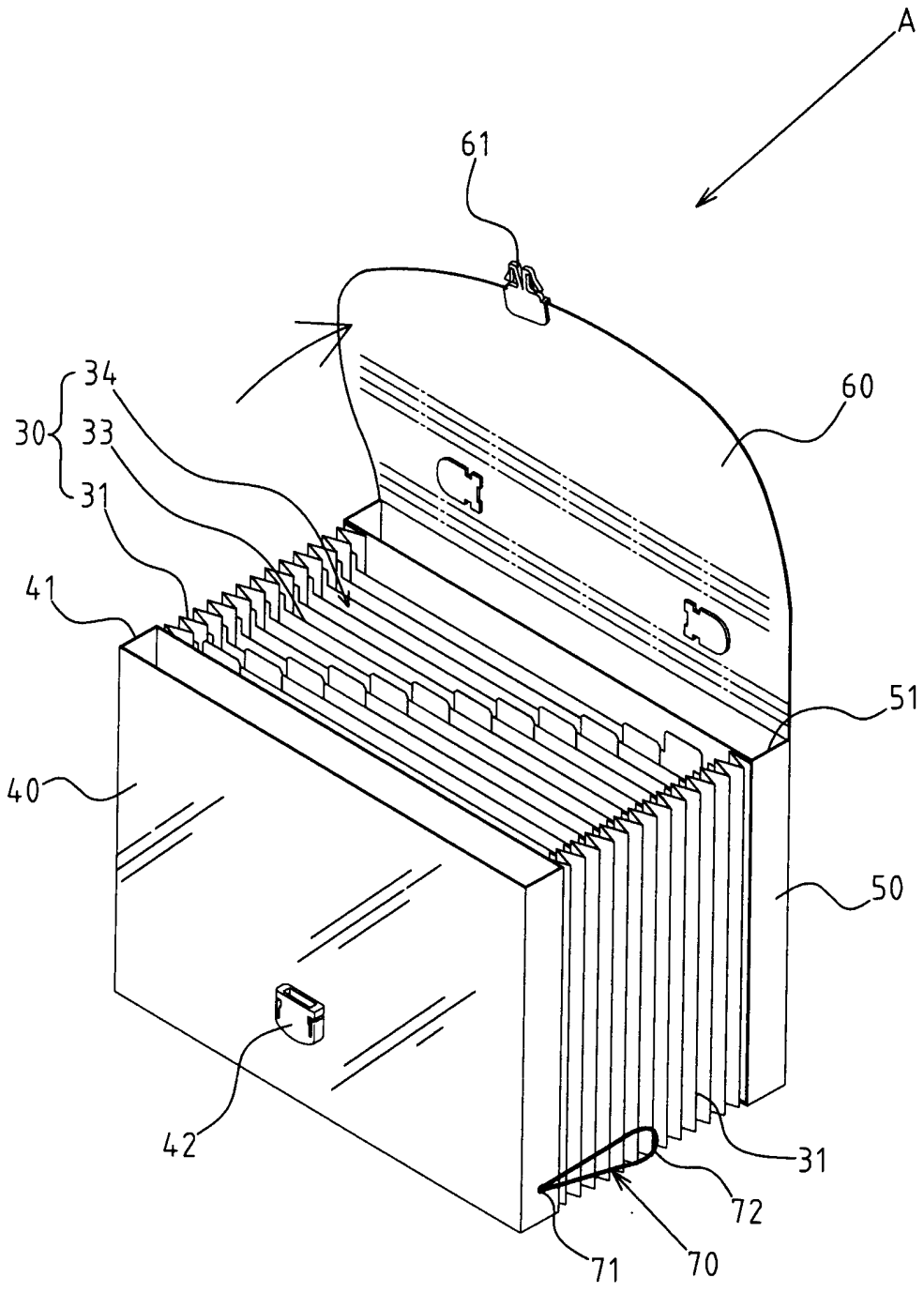

FIG.6

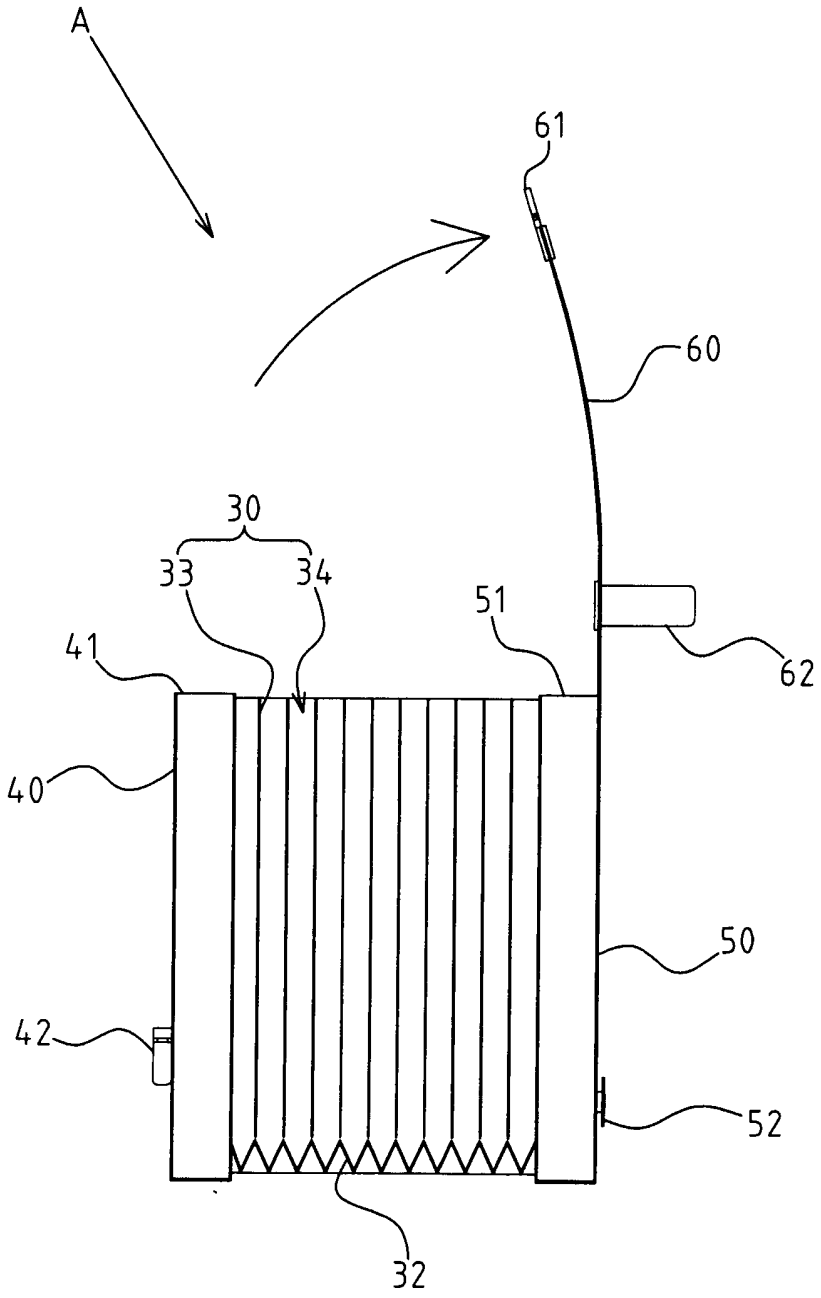

FIG.7

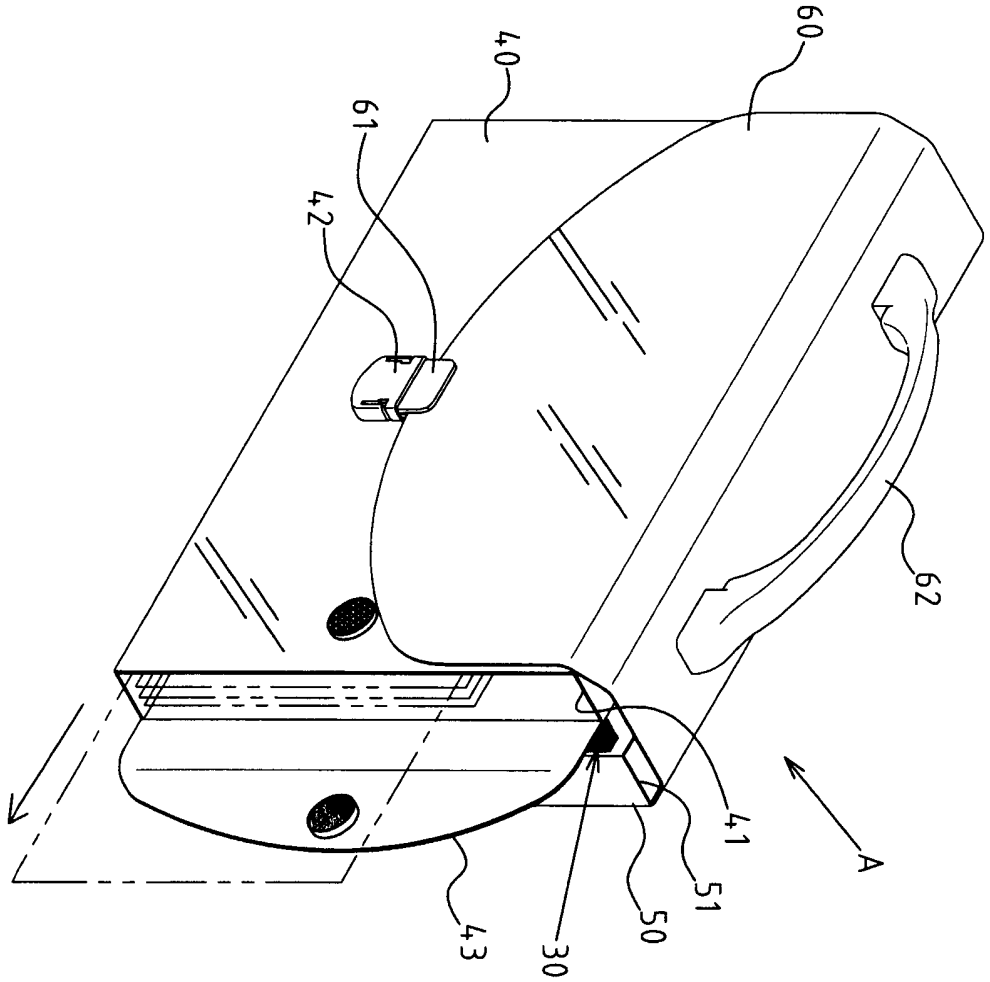

FIG.8

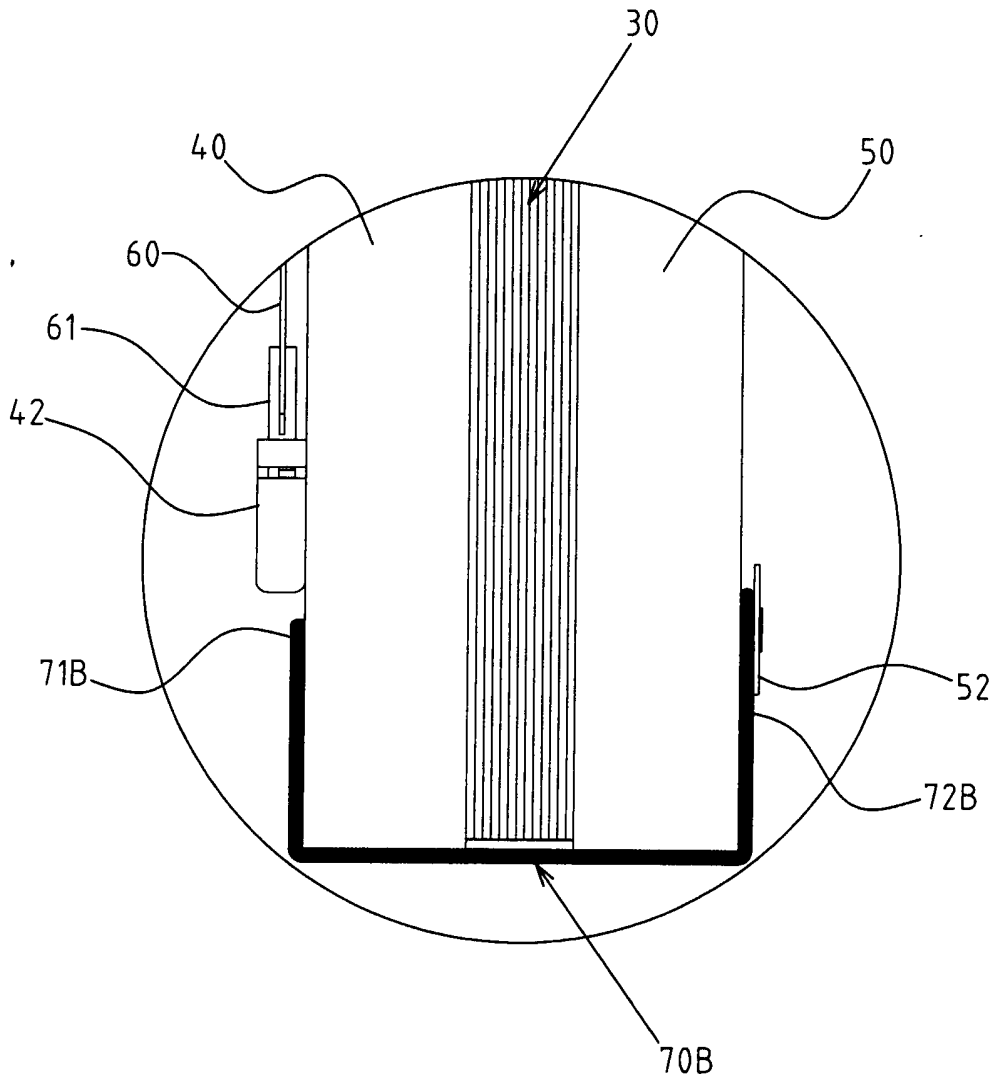

FIG.9

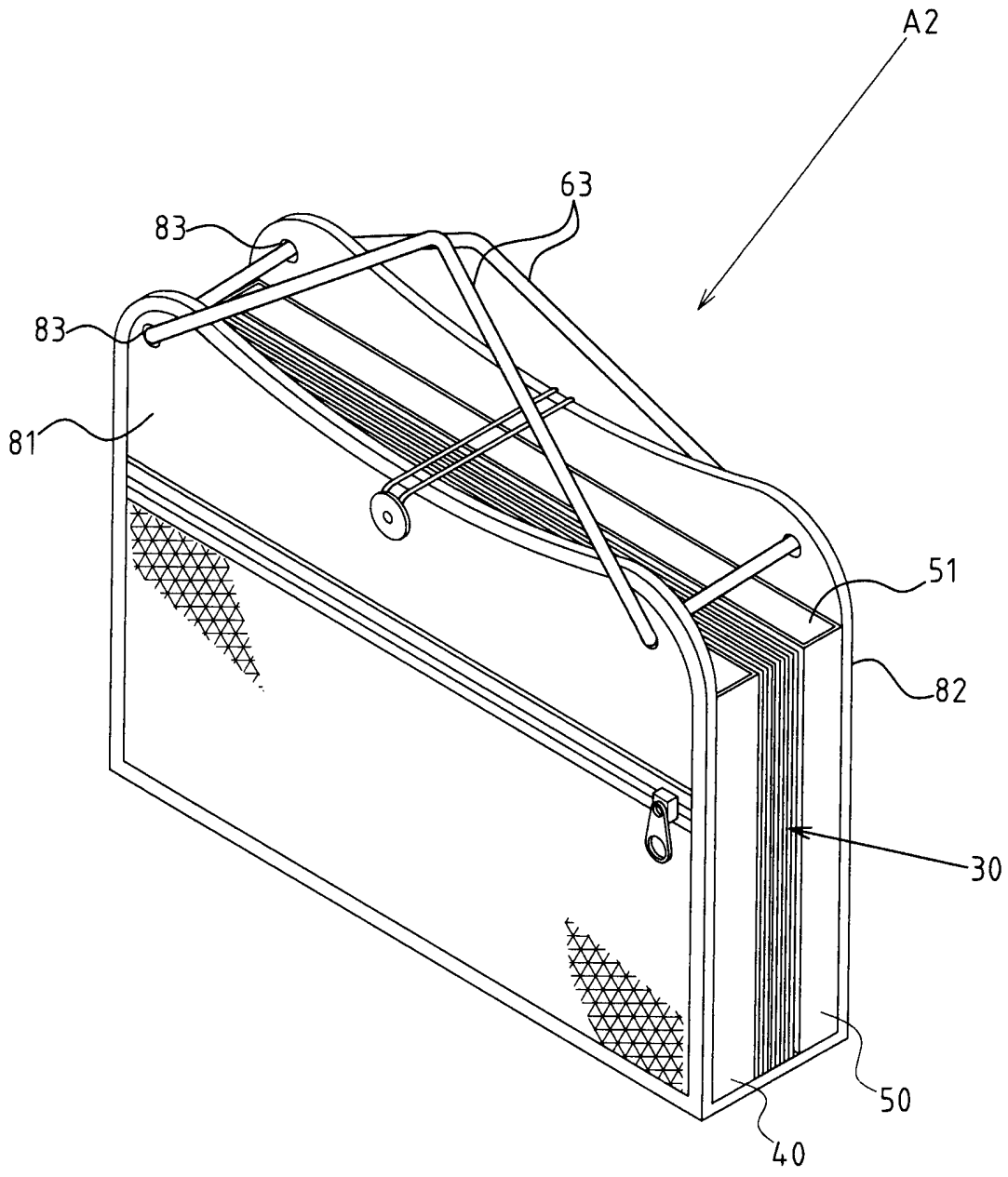

FIG.10

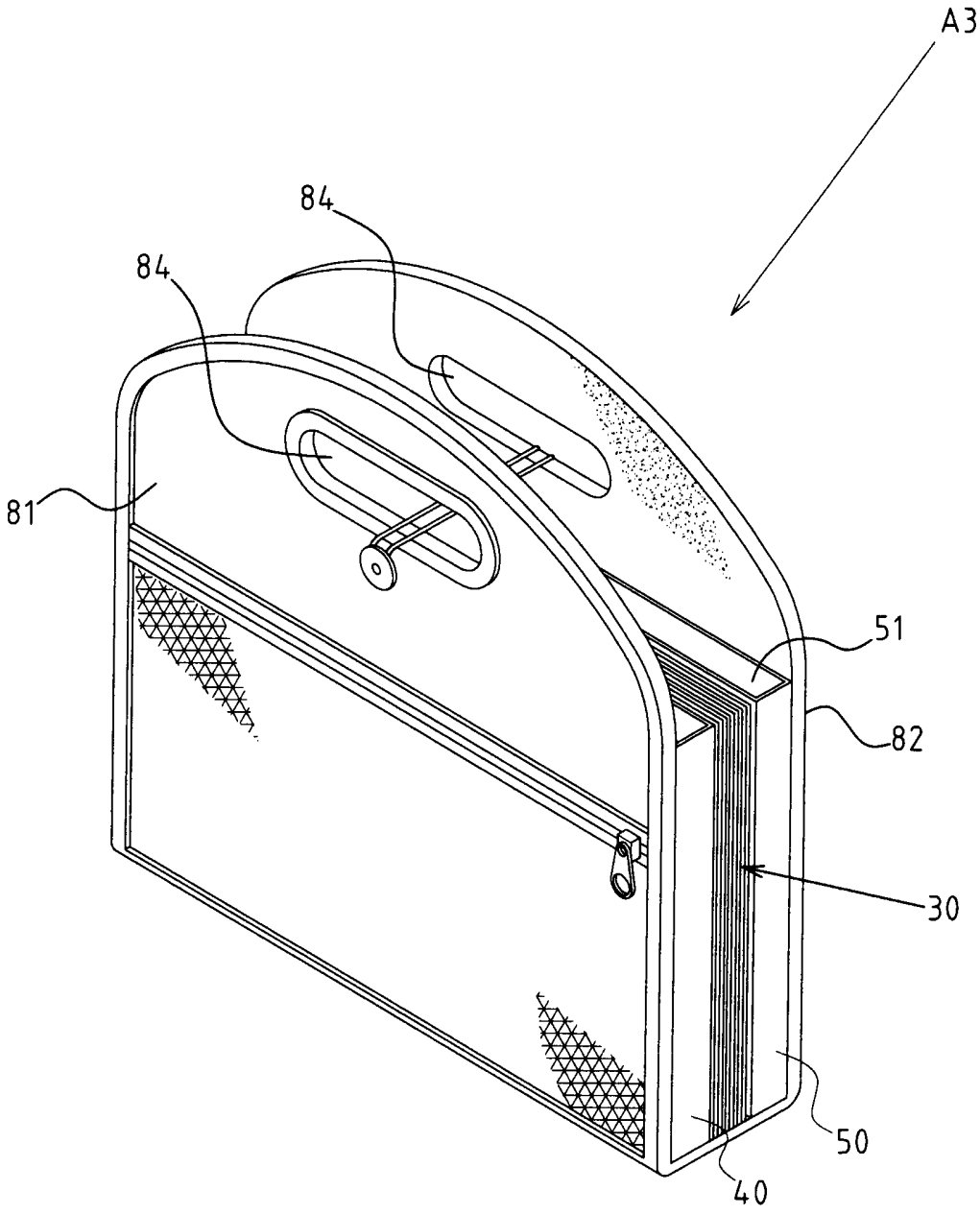

FIG.11

EXPANDABLE FILE FOLDER WITH SEPARATE CASES

BACKGROUND OF INVENTION

1. Field of the Invention

The present invention relates generally to an expandable file folder and more particularly to one that provides an innovative structural space with its separate cases.

2. Description of Related Art

File folders refer to the variety of stationeries used to hold or store files, so it is simply impossible to make a list of all the widely differing file folders available now in the market. The file folders mentioned here are of special "expandable "types, and the most conventional structure of these types is shown in Fig. 1. The file folder consists of the front side11, the back side 12, the two lateral sides 13, one flap 14 and several dividing sheets 15, and consequently the divided spaces16 formed by the sheets. Because of its continuous W-shaped cross-section design in its two lateral sides, it is capable of flex like snake-belly lens and renders the divided spaces16 formed by dividing sheets15 changeable in accordance with the flex of the two lateral sides13. Thus, the file folder10 will change its shape and appearance as the amount of file content varies. The conventional expandable file folder will keep its good orderly shape if A4-sized files are placed inside the file folder10,

because the width of this type of file paper is almost the same as that of the divided spaces16 and can expand the folder in an evenly manner. However, if inside the folder are put files or stationeries (small notebooks, pencil boxes, pens and the like) of much smaller sizes than the divided spaces but with a considerable thickness, the two lateral sides will be expanded unevenly and the folder will look very ugly.

Therefore, another kind of expandable file folder has been produced. As shown in Fig. 2, it differs from the conventional type in that an inflexible case 23 is inserted between the front and back sidewalls 21 22 of the file folder 20. The divided spaces near the front and back sidewalls 21 22 are expandable. The fixed space provided by the case 23 can be used to accommodate the files and stationeries other than A4-sized files, such as small notebooks, pencil boxes and pens. The problem of crushing will also be solved. However, the following problems still exist for this kind of file folder structure.

As shown in Fig. 3, the case of the above-described expandable file folder 20 is inserted between the front and back sidewalls 21 22 of the file folder 20. As the case is usually only 2~3 centimeters thick, it is very difficult for the case alone to support the whole file folder and make it stand steadily. Although the bottom area of the file folder 20 will be increased in accordance with the amount of files placed inside the front or back

expandable sections 24, the increased area is always indefinite. Therefore, when the user places the folder on the desk or on the floor, it will tend to fall down for loss of balance. Moreover, when the folder falls down, the surfaces of the front and back sides will get dirty, and the user will have to spend more time cleaning the folder. In addition, if the user wants to look for, take out or put in a file stored in the expandable sections, he has to stick open the storing space with one hand and look for, take out or put in a file with the other hand. This is because the expandable sections 24 are capable of restoration; once let go of, it will be restored to its original flat and shrunk condition and make the above actions difficult. This is where its inconveniences lie for the user.

Thus, to overcome the aforementioned problems of the prior art, it would be advancement if the art to provide an improved structure that can significantly improve the efficacy.

To this end, the inventor has provided the present invention of practicability after deliberate design and evaluation based on years of experience in the production, development and design of related products.

SUMMARY OF THE INVENTION

The improvements of the present invention include:

The present invention sets the first and second cases 40 50 between the front and rear sides of the expandable storing part 30, the file holder A can, in contrast with the folders in Figs. 2 and 3, be more steady in standing position because of the two separated supporting areas formed beneath the two cases 40 50. Thus the folder, when placed, will not tend to fall down. Besides, when the expandable storing part 30 of the file folder is being stretched and expanded, the file storing space 34 formed in the expandable storing part 30 can always have a definite form because the separation of the first and second cases 40 50 can hold each other at bay. When this stretched and expanded state is maintained, the user will no longer need to stick open the storing space with one hand when looking for, taking out or placing the needed files. This will prove a real convenience.

The new effects of the present invention include:

The present invention as a side flap 43 design on the two cases 40 50, more convenience is guaranteed because to take out or put in the files or stationeries in the first case 40 (or in the second case), only need to open this side flap 43, and save the trouble of opening the top flap 60, which is time wasting for its long length. While the side flap 43 is short because it is used only to cover the opening 41 of the first case 40.

Although the invention has been explained in relation to its preferred embodiment, it is to be understood that many other possible modifications and variations can be made without departing from the spirit and scope of the invention as hereinafter claimed.

BRIEF DESCRIPTION OF THE DRAWINGS

FIG. 1 shows a perspective view of the conventional file folder.

FIG. 2 shows a perspective diagram of another kind of conventional file folder.

FIG. 3 shows a plane lateral view of the file folder in Fig. 2 and the schematic drawing of its collapsed state.

FIG. 4 shows a perspective view of the file folder in the closed form.

FIG. 5 shows a plane lateral view of the file folder in the closed form.

FIG. 6 shows a perspective view of the file folder in the opened form.

FIG. 7 shows a plane cutaway view of the file folder in the opened form.

FIG. 8 shows a perspective view of the file folder with side flap on the cases.

FIG. 9 shows an operational view of the file folder in which elastic positioning cord is used.

FIG. 10 shows an operational view of the flapless file folder in the present invention.

FIG. 11 shows another operational view of the flapless file folder in the present invention.

DETAILED DESCRIPTION OF THE INVENTION

As shown in Figs. 4~7 are the preferred embodiments of the present invention. The embodiments herein provided are only for the purpose of illustration and so the patented expandable file folders will not be restricted by what are shown in the embodiments; a file folderA comprising:

an expandable storing part 30, which consists of right and left wrinkled walls31, a bottom wall 32, several dividing sheets 33, and the file storing space 34 formed by the file storing space; the file storing space 34 can expand or shrink because of the flexibility of the right and left wrinkled walls 31;

a first case 40, which is box-shaped and not flexible; it is in the front side of the expandable storing part 30 and has an opening 41 for the files and stationeries to be put in;

a second case 50, which is box-shaped and not flexible; it is in the back side of the expandable storing part 30 and has an opening 51 for the files and stationeries to be put in;

a flap 60, which is on the top of the expandable storing part 30; it is used to cover and close the file

storing space 34; the flap 60 in this embodiment extends from the top of the second case 50 and at the end of the flap 60 there is a fastener 61, which can be fastened to the fastener base 42 at the outside of the first case 40; thus the flap 60 can be closed at a fixed position; at the top on both sides of the flap 60 can be made a handle 62, with which the whole folder A can be held.

As shown in Fig. 6, the openings 41 51 of the first and second cases 40 50 can be set on the top, so the openings 41 51 of the first and second cases 40 50 and the openings of the file storing space 34 will all face upward. In this way, when the flap 60 is closed, the file storing space 34 and the first and second cases 40 50 can also be closed.

As shown in Fig. 8, the opening 41of the first case 40 can also be designed on the side of the case and a side flap 43 can be made in the place to control the opening and close of the opening 41. The side opening herein disclosed can be applied to either one or both of the two cases. With this side flap 43 design, more convenience is guaranteed because to take out or put in the files or stationeries in the first case 40 (or in the second case), just need to open this side flap 43, and save the trouble of opening the top flap 60, which is time wasting for its long length. While the side flap 43 is short because it is used only to cover the opening 41 of the first case 40.

The elastic positioning cord 70 can be designed between the first and second cases 40 50. It has a positioning end 71 and a connecting end 72. The positioning end 71 is can be designed either in the first case 40 or in the second case 50 (in this embodiment it is placed in the first case). The connecting end 72 can be designed to connect to the matching connecting part 52 in the other case (in this embodiment it is placed in the second case). The elastic positioning cord 70 can be used to fix the distance between the first and second cases 40 50 and at the same time to restrict the expansion of the expandable storing part 30. The more specific embodiment of the elastic positioning cord 70 is shown in Figs. 4 and 5.

The positioning end 71 of the elastic positioning cord 70 is designed at the side of the first case 40 so that its connecting end 72 can be linked, via the wrinkled walls31 of the expandable storing part 30, to the connecting end 72 designed at the back side of the second case 50. Another embodiment of the elastic positioning cord 70B is shown in Fig. 9. Its positioning end 71B is designed to be placed at the front side of the first case 40 so that its connecting end 72B can be linked, via the bottom wall 32 of the expandable storing part 30, to the connecting part 52 designed at the back side of the second case 50.

Thus, the design is based on the above structures. Herein the use of the present invention will be explained.

As shown in Figs. 4 and 5, the file folder A is closed with flap 60. When in this state, the openings of the first and second cases 40 5 and the openings of the file storing space 34 will be opened or closed by the flap 60; on the other hand, the elastic positioning cord 70 can be used to fix the distance between the first and second cases 40 50 and at the same time to restrict the expansion of the expandable storing part 30.

And the file folder A is at its flattest state, it can stand very steady as a result of the increased firm contact area from the two separate cases: the first and second cases 40 50. Thus convenience is guaranteed for placing the folder.

The file folder's flap 60 in Figs. 6 and 7 are opened. The elastic positioning cord 70 is in a loosened situation, and the expandable storing part 30 is in a stretched and expanded state. In this state the file storing space 34 formed in the expandable storing part 30 can always have a definite form because the separation of the first and second cases 40 50 can hold each other at bay. This is especially so when there are files placed in the first and second cases 40 50, because the increased weight will help to steady the file folder A even better. And the stretched and expanded state of the file storing

space 34 will be kept, thus facilitating the fetching, searching and storing of files.

The file folder A2 in Fig. 10 is flapless. This embodiment does not have a flap to which the handle 62 is originally attached. Instead, a cord 63 or a belt is used. The two ends of the cord 63 are respectively pulled through the cord holes 83 designed at the top of the front and rear walls 81 82 of the first and second cases 40 50. The holding part is thus formed as the two ends of the cord 63 are pulled upward. This arrangement will also help the top of the front and rear walls 81 82 move toward each other and the outward moving action will be prevented.

The file folder A3 in Fig. 11 is another embodiment of flapless 60 holder. Its difference from the holder in Fig. 10 only lies in the handle hole 84 that is designed directly at the top of the front and rear walls 81 82 and thus helps to form the holding part.

Attention is directed to all papers and documents which are filed concurrently with or previous to this specification in connection with this application and which are open to public inspection with this specification, and the contents of all such papers and documents are incorporated herein by reference.

All of the features disclosed in this specification (including any accompanying claims, abstract and drawings), and/or all of the steps of any method or process so disclosed, may be combined in any combination,

except combinations where at least some of such features and/or steps are mutually exclusive.

Each feature disclosed in this specification (including any accompanying claims, abstract and drawings) may be replaced by alternative features serving the same, equivalent or similar purpose, unless expressly stated otherwise. Thus, unless expressly stated otherwise, each feature disclosed is one example only of a generic series of equivalent or similar features.

The invention is not restricted to the details of the foregoing embodiment(s). The invention extends to any novel one, or any novel combination, of the features disclosed in this specification (including any accompanying claims, abstract and drawings), or to any novel one, or any novel combination, of the steps of any method or process so disclosed.

CLAIMS

1. An expandable file folder with separate cases, comprising:

an expandable storing part, which consists of right and left expandable walls such as wrinkled walls, a bottom wall, several dividing sheets, and a file storing space formed by the file storing space;

a first case, which is in the front side of the expandable storing part and has an opening for the files and stationeries to be put in;

a second case, which is in the back side of the expandable storing part and has an opening for the files and stationeries to be put in.

2. The structure defined in Claim 1, wherein the opening of the first and second cases can be designed on the top.

3. The structure defined in Claim 1 or 2, wherein the opening of the first and second cases can be designed sidewise and the side flap will be designed to control the opening and closing of the opening.

4. The structure defined in any preceding Claim, wherein an elastic positioning cord can be placed between the first and second cases; it has a positioning end and a connecting end; the positioning end can be designed either in the first case or the second case; the connecting end can be designed to be connected to a connecting part such as a matching connecting part in the other case.

5. The structure defined in any preceding Claim, wherein a flap can be designed on the top of the expandable storing part to cover the file storing space.

6. The structure defined in any of Claims 1 to 4, wherein the two ends of a cord are respectively pulled through the cord holes designed at the top of the front and rear walls of the first and second cases; a holding part is thus formed as the two ends of the cord are pulled upward.

7. The structure defined in any of Claims 1 to 4, wherein the handle hole is set directly on the top of the front and rear walls of the first and second cases; the holding part is thus formed.

8. An expandable file folder with separate cases substantially as herein described with reference to and as shown in any of Figures 4 to 11.

The Patent Office

PATENTS DESIGNS COPYRIGHT TRADE MARKS

For Innovation

14

Application No: GB0602438.4 **Examiner:** Richard Pannett

Claims searched: 1-8 **Date of search:** 31 May 2006

Patents Act 1977: Search Report under Section 17

Documents considered to be relevant:

Category	Relevant to claims	Identity of document and passage or figure of particular relevance
X	1-3, 5.	JP 09071078 A (KAWAI CORP KK) See figures 1-5. See also WPI Accession Number 1997-230734 [21] and PAJ abstract.
A	-	US 6945399 B1 (ONG) See: abstract; figures 1, 7.
A	-	US 6880747 B1 (BETTER OFFICE PRODUCTS) See: abstract; figures 1,2,6.
A	-	US 5664724 A (HONN HSIN ENTERPRISE) See: abstract; figure 3.

Categories:

X	Document indicating lack of novelty or inventive step	A	Document indicating technological background and/or state of the art.
Y	Document indicating lack of inventive step if combined with one or more other documents of same category.	P	Document published on or after the declared priority date but before the filing date of this invention.
&	Member of the same patent family	E	Patent document published on or after, but with priority date earlier than, the filing date of this application.

Field of Search:

Search of GB, EP, WO & US patent documents classified in the following areas of the UKC^{X} :

B6E

Worldwide search of patent documents classified in the following areas of the IPC

A45C; B42F

The following online and other databases have been used in the preparation of this search report

EPODOC, WPI.