Sept. 14, 1926. 1,599,978

J. C. SUTTON

CAP

Filed March 6, 1926

Fig. 1.

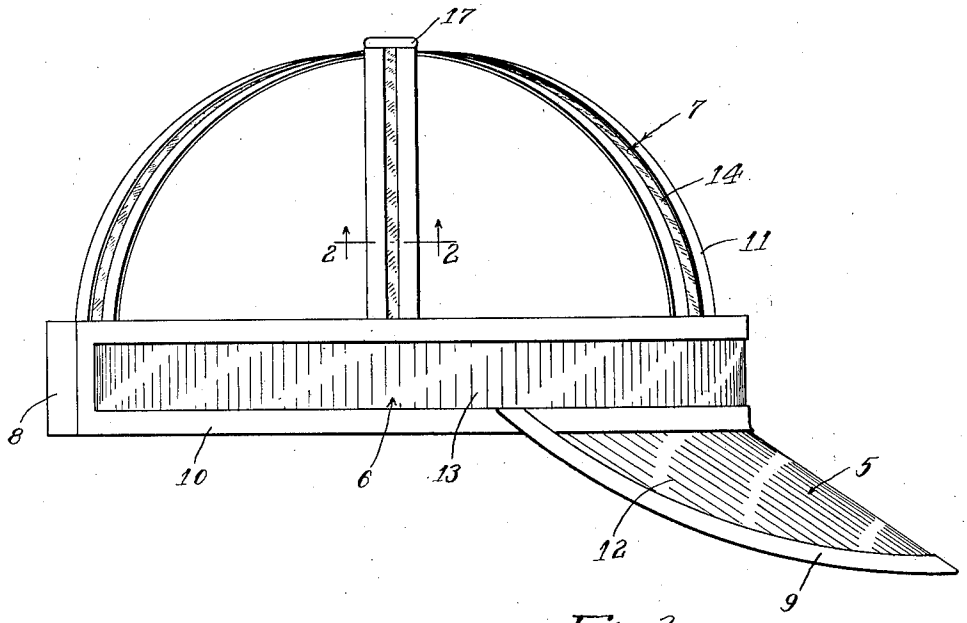

Fig. 3.

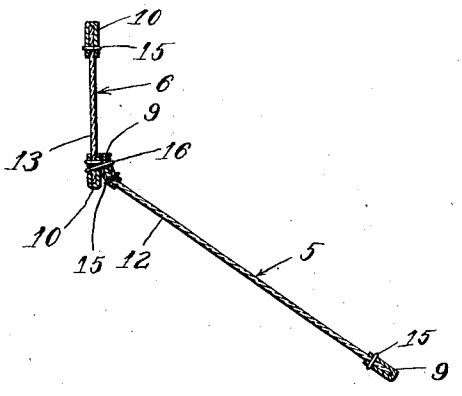

Fig. 2

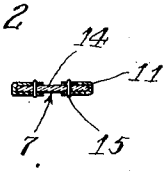

Inventor:
John C. Sutton
By Wilson & McCanna
Attys.

Patented Sept. 14, 1926. 1,599,978

UNITED STATES PATENT OFFICE.

JOHN C. SUTTON, OF ROCKFORD, ILLINOIS, ASSIGNOR TO SUTTON SHOPS, INC., OF ROCKFORD, ILLINOIS, A CORPORATION OF ILLINOIS.

CAP.

Application filed March 6, 1926. Serial No. 92,657.

This invention relates to caps of the kind commonly known as skeleton caps, which are intended for general sporting and outdoor use.

The principal object is to provide a light, cool, and inexpensive cap of this kind which is made principally of celluloid, or any other material of similar characteristics that can be procured transparent and in various colors, which is incorporated in the cap construction in a novel manner giving not only a decidedly more attractive appearing article of this kind than was hitherto known but also one which is not limp and will retain its shape.

Another object is to provide the visor, band, and spider top of the cap in the form of skeleton frames of relatively limp material into which the celluloid or other material is introduced as reinforcing inserts, the frames being sewed about the raw edges of the celluloid and serving to protect the same while at the same time giving an ornamental appearance because of the contrast with the transparent and colored celluloid. The frames of the limp material are also capable of being firmly and permanently sewed together whereas the celluloid itself would not permit of such connection.

The invention is illustrated in the accompanying drawing, in which—

Figure 1 is a side view of a cap made in accordance with the invention;

Fig. 2 is a sectional detail of one of the legs of the spider top taken on the line 2—2 of Fig. 1; and

Fig. 3 is a sectional detail showing the connection between the band and the peak or visor while at the same time showing the construction of these parts.

Skeleton caps usually comprise a peak or visor 5, a band 6, and a spider top 7 consisting of a plurality of strap members, the band having an elastic 8, usually in the back, to accommodate the band to the wearer's head without the necessity for providing many close sizes of caps. Up to the present time, the construction of the band and spider top has virtually followed the practice in the making of ordinary caps, the bands usually having an inner sweat band and the parts throughout being sewed together in an ordinary conventional manner. These caps, because of their skeleton construction, were usually rather limp and awkward to handle and would not retain their shape. Furthermore, they were, on the whole, drab appearing and unattractive as it was not conceived to be possible to lend any appreciable degree of ornamentality to them. The present invention departs from the previous practice by providing a skeleton frame 9 for the visor 5, another skeleton frame 10 for the band 6, and individual skeleton frames 11 for the different legs of the spider top 7. These frames are made of any suitable material, such as a light imitation leather or leatherette of any woven or fabricated material which is pliable and comparatively limp but which serves the present purpose because of the insertion therein of reinforcement in the form of celluloid pieces 12, 13, and 14 in the frames 9, 10, and 11 respectively. The celluloid inserts lend sufficient body to the cap that the same when laid down will not crumple and fall in a heap. Furthermore, the stiffness, but nevertheless flexibility, of the celluloid renders the cap easy to handle in putting on and taking off, much more so than the ordinary limp cap that was hitherto available. These advantages, however, are not to be compared with or at least should not be considered as of more importance than the fact that the celluloid lends a high degree of ornamentality to the cap resulting in a decidedly more attractive appearing article of this kind than was hitherto known. The skeleton frames 9, 10, and 11 bordering the celluloid inserts 12, 13, and 14 giving a pleasing contrast and novel effect, particularly because of the transparency and the color of the celluloid. It will be noted in the drawing how the transparent celluloid is set off in clear contrast by the bordering frame work. The sheerness and gloss of the celluloid in contrast to the rest of the cap make a special appeal. The skeleton frames moreover cover and protect the raw edges of the celluloid as they are permanently sewed thereon, as indicated at 15. The use of celluloid in an article of this type would otherwise appear impractical because of the difficulty in joining together by sewing or other means, if it were not for the fact that the bordering skeleton frames permit of firmly and permanently sewing together the different parts of the cap. For example, the visor 5 is sewed to the band, as indicated at 16, by sewing together the skeleton

frames 9 and 10. The spider top 7 is joined to the band 6 in a similar manner and the different parts thereof are joined at the crown by a button rivet 17.

From the foregoing, it will be apparent that my invention comprehends the manufacture of a skeleton cap, the body of which is composed of celluloid or the like, that is, of any sheet plastic cellulose material or any composition material which is normally resilient, said body being formed by cutting the sheet material to shape to provide the respective parts making up the cap, such parts comprising preferably a visor, a head-band and a plurality of strap members. It also comprehends binding the raw edges of the sheet material pieces by means of a framework above mentioned, consisting preferably of a suitable binding material secured to said pieces by stitching, and serving to protect and reenforce the marginal edges thereof. It further comprehends uniting the sheet material body parts having the bordering framework, by suitable fastening means which pass through said body parts in such relation to the bordering framework as to be retained thereby, such means comprising in the preferred commercial form stitching passing through both the sheet material and the border binding.

While I have illustrated in the drawing but a single embodiment of my invention, it should be understood that in practice different materials might be used, and many changes might be made in details of construction without departing from the spirit and scope of the invention as expressed in the appended claims, in which

I claim:—

1. A cap comprising a visor, a head-band and a plurality of strap members, said visor, head-band, and strap members comprising sheets of plastic, normally resilient material having their edge portions bound with a pliable binding material, said visor being attached to the lower edge portion of the band by fastening means passing through the sheets and bindings, said strap members being attached to the band by fastening means passing through the sheets and bindings.

2. A skeleton cap the body of which is composed of sheet plastic cellulose material cut to shape to provide a visor, a head-band and a plurality of strap members, the marginal edges of said visor, head-band and strap members being bound by a pliable binding material stitched thereto, said visor, head-band and strap members being united by stitching passing through the sheet material and binding material.

3. A skeleton cap comprising a visor, a head-band and a plurality of strap members, said visor, head-band and strap members being of thin resilient composition material, the marginal edges of said visor, head-band, and strap members being bound by a pliable binding material stitched thereto, said visor, head-band, and strap members being united by stitching passing through the sheet material and binding material.

4. A skeleton cap, the body parts of which comprises a visor, a head-band, and a crown, the body of two of said parts being of thin resilient composition material and having a border frame of pliable binding material, said binding material being turned over the marginal edges of said thin resilient composition parts and secured thereto, and fastening means uniting the said parts and passing through the composition material and binding material.

In witness of the foregoing I affix my signature.

JOHN C. SUTTON.