PCT

WORLD INTELLECTUAL PROPERTY ORGANIZATION
International Bureau

INTERNATIONAL APPLICATION PUBLISHED UNDER THE PATENT COOPERATION TREATY (PCT)

(51) International Patent Classification 7 : H04L 1/00

A1

(11) International Publication Number: WO 00/18055

(43) International Publication Date: 30 March 2000 (30.03.00)

(21) International Application Number: PCT/US99/21756

(22) International Filing Date: 22 September 1999 (22.09.99)

(30) Priority Data:
09/158,254 22 September 1998 (22.09.98) US

(71) Applicant: QUALCOMM INCORPORATED [US/US]; 5775 Morehouse Drive, San Diego, CA 92121-1714 (US).

(72) Inventors: BLACK, Peter, J.; 8558 Villa La Jolla Drive #258, La Jolla, CA 92037 (US). KARMI, Gadi; 10968 Corte Playa Barcelona, San Diego, CA 92124 (US). SINDHUSHAYANA, Nagabhushana, T.; 10615 Dabney Drive #19, San Diego, CA 92126 (US).

(74) Agents: MILLER, Russell, B. et al.; QUALCOMM Incorporated, 5775 Morehouse Drive, San Diego, CA 92121-1714 (US).

(81) Designated States: AE, AL, AM, AT, AU, AZ, BA, BB, BG, BR, BY, CA, CH, CN, CR, CU, CZ, DE, DK, DM, EE, ES, FI, GB, GD, GE, GH, GM, HR, HU, ID, IL, IN, IS, JP, KE, KG, KP, KR, KZ, LC, LK, LR, LS, LT, LU, LV, MD, MG, MK, MN, MW, MX, NO, NZ, PL, PT, RO, RU, SD, SE, SG, SI, SK, SL, TJ, TM, TR, TT, TZ, UA, UG, UZ, VN, YU, ZA, ZW, ARIPO patent (GH, GM, KE, LS, MW, SD, SL, SZ, TZ, UG, ZW), Eurasian patent (AM, AZ, BY, KG, KZ, MD, RU, TJ, TM), European patent (AT, BE, CH, CY, DE, DK, ES, FI, FR, GB, GR, IE, IT, LU, MC, NL, PT, SE), OAPI patent (BF, BJ, CF, CG, CI, CM, GA, GN, GW, ML, MR, NE, SN, TD, TG).

Published
With international search report.
Before the expiration of the time limit for amending the claims and to be republished in the event of the receipt of amendments.

(54) Title: METHOD AND APPARATUS FOR TRANSMITTING AND RECEIVING VARIABLE RATE DATA

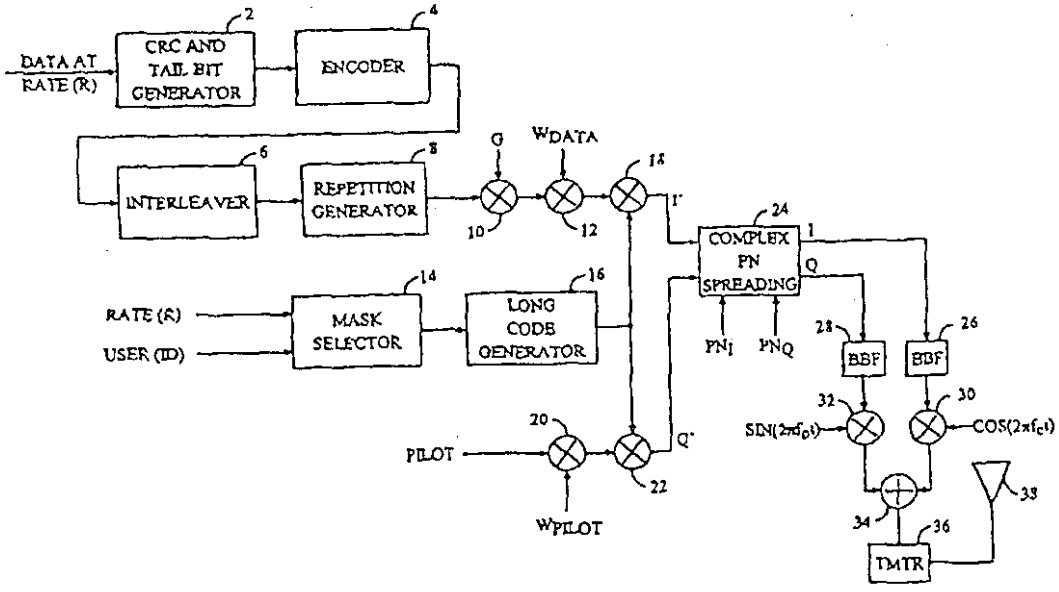

(57) Abstract

A method for transmitting and receiving variable rate data. The data is spread using a long pseudo noise code generated by a linear feedback PN generator (16), the mask of which is selected by mask selector (14) in accordance with the transmission rate of the variable data and the specific user transmitting the data. Thus, by identifying at the receiver which mask will allow the received waveform to be correctly despread, the rate of the data can be determined.

830 X 11 = 10790

METHOD AND APPARATUS FOR TRANSMITTING AND RECEIVING VARIABLE RATE DATA

BACKGROUND OF THE INVENTION

I. Field of the Invention

The present invention relates to communications. More particularly, the present invention relates to a method and apparatus for transmitting and receiving variable rate packets of data with signals indicative of the data rate of those packets.

II. Description of the Related Art

The use of code division multiple access (CDMA) modulation techniques is one of several techniques for facilitating communications in which a large number of system users are present. Although other techniques such as time division multiple access (TDMA), frequency division multiple access (FDMA), and AM modulation schemes such as amplitude companded single sideband (ACSSB) are known, CDMA has significant advantages over these other techniques. The use of CDMA techniques in a multiple access communication system is disclosed in U.S. Patent No. 4,901,307, entitled "SPREAD SPECTRUM MULTIPLE ACCESS COMMUNICATION SYSTEM USING SATELLITE OR TERRESTRIAL REPEATERS," and assigned to the assignee of the present invention and incorporated by reference herein. The use of CDMA techniques in a multiple access communication system is further disclosed in U.S. Patent No. 5,103,459, entitled "SYSTEM AND METHOD FOR GENERATING SIGNAL WAVEFORMS IN A CDMA CELLULAR TELEPHONE SYSTEM", assigned to the assignee of the present invention and incorporated by reference herein.

In the aforementioned U.S. Patent No. 5,103,459 (the '459 patent), the use of orthogonal Walsh codes to provide channelization to different subscriber stations is described. This allows a base station to transmit many separate channels to a plurality of users in the coverage area of the base station. In the '459 patent, one of the orthogonal Walsh channels that was transmitted was a pilot channel that allowed for the coherent demodulation of the traffic channels transmitted on other orthogonal Walsh channels. A method for

transmitting a CDMA signal from a mobile station which is capable of coherent demodulation is described in U.S. Patent Application Serial No.08/856,428, entitled "REDUCED PEAK TO AVERAGE TRANSMIT POWER HIGH DATA RATE IN A CDMA WIRELESS COMMUNICATION SYSTEM," filed April 9, 1996, assigned to the assignee of the present invention and incorporated by reference herein. In U.S. Patent Application Serial No.08/856,428, the mobile station transmits a plurality of different channels wherein each of the channels is distinguished by use of a short Walsh sequence. In addition, in U.S. Patent Application Serial No.08/856,428, a method of complex pseudonoise (PN) spreading that reduces peak to average ratio in the transmission of a QPSK modulated signal.

CDMA systems often employ a variable rate vocoder to encode data so that the data rate can be varied from one data frame to another. An exemplary embodiment of a variable rate vocoder is described in U.S. Pat. No. 5,414,796, entitled "VARIABLE RATE VOCODER," assigned to the assignee of the present invention and incorporated by reference herein. The use of a variable rate communications channel reduces mutual interference by eliminating unnecessary transmissions when there is no useful speech to be transmitted.

Similarly, it is desirable for providing variable rate transmission of digital data in CDMA wireless communication systems. When there is a great deal of digital information to be transmitted and when minimizing delay is important, then data should be transmitted at high transmission rates. However, when there is less data to be transmitted or when minimizing delay is not as important, it is desirable to reduce the transmission rate of digital data in a wireless communication system, because transmission at rates lower than the maximum transmission rate can result in increased range, extended battery life and reduce interference to other users.

One technique for the receiver to determine the rate of a received data frame is described in copending U.S. Patent No. 5,566,206, entitled "METHOD AND APPARATUS FOR DETERMINING DATA RATE OF TRANSMITTED VARIABLE RATE DATA IN A COMMUNICATIONS RECEIVER," assigned to the assignee of the present invention and incorporated by reference herein. Another technique is described in copending U.S. Patent Application Serial No. 08/126,477, entitled "MULTIRATE SERIAL VITERBI DECODER FOR CODE DIVISION MULTIPLE ACCESS SYSTEM APPLICATIONS," filed Sept.24, 1993, assigned to the assignee of the present invention, and incorporated by reference

herein. According to these techniques, each received data frame is decoded at each of the possible rates. Error metrics, which describe the quality of the decoded symbols for each frame decoded at each rate, are provided to a processor. The error metrics may include Cyclic Redundancy Check (CRC) results, Yamamoto Quality Metrics, and Symbol Error Rates. These error metrics are well-known in communications systems. The processor analyzes the error metrics and determines the most probable rate at which the incoming symbols were transmitted.

SUMMARY OF THE INVENTION

The present invention provides a novel and improved apparatus and method for transmitting and receiving variable rate data. In the first embodiment of the present invention, the data is spread using a long pseudonoise code generated by a linear feedback PN generator, the mask of which is selected in accordance with the transmission rate of the variable data and the specific user transmitting the data. Thus, by identifying at the receiver which mask will allow the received waveform to be correctly despread, the rate of the data can be determined. In the second embodiment of the present invention a preamble from a predetermined set of preambles is punctured into the outgoing pilot signal to provide rate indication information. In the third embodiment, the rate indication signal is encoded in accordance with a set of orthogonal functions which are part of the indication of the rate of the data packet.

BRIEF DESCRIPTION OF THE DRAWINGS

The features, objects, and advantages of the present invention will become more apparent from the detailed description set forth below when taken in conjunction with the drawings in which like reference characters identify correspondingly throughout and wherein:

FIG. 1 is a block diagram of the transmission system of the first embodiment of the present invention;

FIG. 2 is a block diagram of an exemplary PN generator;

FIG. 3 is a diagram illustrating the bits used for the long code mask;

-6

FIG. 4 is a block diagram illustrating the first receiver system for receiving variable rate data transmitted by means of the first embodiment of the present invention;

FIG. 5 is a block diagram illustrating the second receiver system for receiving variable rate data transmitted by means of the first embodiment of the present invention;

FIG. 6 is a block diagram illustrating the transmitter system of the second embodiment of the present invention;

FIGS. 7A-7H are diagrams illustrating a proposed set of preamble formats for use in the second embodiment of the present invention;

FIG. 8 is a block diagram illustrating the receiver system of the second embodiment of the present invention;

FIG. 9 is a block diagram of a remote station of the present invention illustrating the transmitter system of the third embodiment of the present invention; and

FIG. 10 is a block diagram illustrating the receiver system of the third embodiment of the present invention.

DETAILED DESCRIPTION OF THE PREFERRED EMBODIMENTS

Referring to the figures, FIG. 1 illustrates the transmission apparatus of the present invention in block diagram form. The data packet to be transmitted is provided to cyclic redundancy check (CRC) and tail bit generator 2. The number of bits of data in the data packet determines the effective rate R of the transmission. CRC and tail bit generator 2 generates a set of CRC bits such as parity bits in accordance with methods that are well known in the art. The CRC bits along with a set of tail bits are appended to the data packet.

The data packet with the appended CRC and tail bits is provided to forward error correction encoder 4. Encoder 4 can be any form of digital forward error correction encoder, such as convolutional encoder, a Reed Solomon encoder or other known forward error correction coder. In the exemplary embodiment, encoder 4 is a turbo coder, the design of which is well known in the art and is described in detail in U.S. Patent No. 5,446,747, entitled

"ERROR-CORRECTION CODING METHOD WITH AT LEAST TWO SYSTEMATIC CONVOLUTIONAL CODINGS IN PARALLEL, CORRESPONDING ITERATIVE DECODING METHOD, DECODING MODULE AND DECODER", which is incorporated by reference herein.

The encoded packet is provided to interleaver 6 which reorders the encoded symbols in the packet to provide temporal diversity that provides for additional protection against burst errors. The reordered packet is then provided to repetition generator 8 which provides redundant versions of the interleaved symbols into the packet so as to output packets of fixed number of symbols regardless of the data rate of the packet R. The packet from repetition generator 8 is provided to gain element 10 which adjusts the gain of the packet in accordance with the rate R of the packet and in order to provide the correct power ratio between the pilot channel and the data channel.

The packet from gain element 10 is provided to subchannel spreading element 12. Subchannel spreading element 12 spreads the packet using a short spreading sequence (W_{data}) that is used to allow the receiver to separate the pilot channel from the data channel. In the exemplary embodiment, the short spreading sequences used are short orthogonal Walsh sequences. The use of short orthogonal Walsh sequences to provide channelization on the reverse link is described in detail in the aforementioned U.S. Patent Application Serial No. 08/856,428. The spread packet from subchannel modulation element 12 is provided to scrambling element 18. Scrambling element 18 scrambles the packet in accordance with a pseudonoise (PN) sequence generated by long code generator 16.

Turning to FIG. 2 an exemplary embodiment of the PN generator 16 is illustrated. The packet is covered using a pseudonoise (PN) sequence derived from a FIR filter 50 composed of a linear shift register with associated summing elements and taps. In the exemplary embodiment, FIR filter 50 is a 42 tap FIR filter that is used in the scrambling of reverse link transmissions in the Telecommunications Industry Association standard TIA/EIA/IS-95-A, entitled

Mobile Station-Base Station Compatibility Standard for Dual-Mode Wideband Spread Spectrum Cellular System.

The outputs from FIR filter 50 are provided to a bank of AND gates 52. Each of the outputs of FIR filter 50 are ANDed with a 42-bit Long Code Mask. The results of the ANDing operations are provided to modulo-2 addition means 54, which performs the summing operation to provide the long code sequence as a serial output. The long code generated in this fashion has important autocorrelation characteristics that are well known in the art. Long codes of this fashion are used in cellular CDMA systems to distinguish one mobile station from another. When two distinct long code masks are used, the resulting two long code sequences are uncorrelated or at least have very limited correlation. The present invention takes advantage of this property of the generated long codes in order to encode the rate information.

As shown in FIG. 3, in the present invention the exemplary 42-bit long code mask comprises n bits which identify the rate of transmission and (42-n) bits, which are used to identify the user. For example if there are two possible transmission rates then a single bit (n=1) would be sufficient to identify the transmission rate. If there were 3 or 4 possible transmission rates, then two bits (n=2) would be necessary to specify the rate, and so on. In FIG. 3, the bits identifying the transmission rate are the most significant bits (MSBs), however any of the bits would be equally applicable and the bits identifying the rate need not even be consecutive.

Returning to FIG. 1, the information regarding the rate of the information is provided to mask selector 14 that provides a mask in accordance with the rate information R and the identity of the transmitting remote station. Mask selector 14 could be implemented using a memory device such as a RAM or ROM device that stores mask codes that are retrieved in accordance with the rate of the packet to be transmitted. The selected mask is provided to long code generator 16 which provides the generated long code to scrambling elements 18 and 22.

In the exemplary embodiment, the remote station transmits both a data channel and a pilot channel that allows for coherent demodulation of its transmitted signal. The present invention is not limited to systems that transmit a data channel with an accompanying pilot channel nor is it limited to reverse link transmissions. The present invention is equally applicable to any variable rate transmission system in which the receiver does not know apriori the rate of the transmission and in which the data is scrambled using a pseudonoise sequence.

A set of pilot signal bits is provided to subchannel spreading element 12. The pilot signal carries no information and in the exemplary embodiment is simply a string of zeroes. The pilot bits are spread by a short Walsh sequence W_{pilot}, which in the exemplary embodiment is orthogonal to W_{data}, and is used to distinguish the pilot channel from the data channel. The subchannel spread packet is provided to scrambling element 22, which as described previously scrambles the packet in accordance with the long code generated by long code generator 16.

The PN scrambled packets from scrambling elements 18 and 22 are provided to complex IQ spreading means 24, which performs a complex spreading operation as described in aforementioned U.S. Patent Application Serial No. 08/856,428. The outputs I and Q are complex spread by the input psuedonoise sequences PN_i and PN_q to provide outputs I and Q in accordance with the following equations:

$$I = I' PN_I - Q' PN_Q, \quad (1)$$

$$Q = I' PN_Q + Q' PN_I. \quad (2)$$

The outputs from complex PN spreading means 24 are provided to baseband filters (BBF) 26 and 28 which provide the appropriate filtering of the resultant waveform. The filtered waveforms are provided to upconversion elements 30 and 32 and are upconverted to the carrier frequency (f_c) in accordance with a QPSK modulation format. The two upconverted waveforms are summed in summing element 34, the output of which is provided to

transmitter (TMTR) 36, which amplifies and filters the signal and provides it to antenna 38 for transmission.

FIG. 4 illustrates a first receiver system for receiving the waveform transmitted in accordance with FIG. 1. The signal is received at antenna 100 and provided to receiver (RCVR) 102, which filters and amplifies the received signal. The received signal is then provided to downconverters 104 and 106, which downconvert the received signal in accordance with a QPSK downconversion methodology as is well known in the art. The I and Q components of the downconverted signals are provided to baseband filters (BBF) 108 and 110, which filter the signals and provide the baseband signals to complex PN despreading means 112. The implementation of complex despreading means 112 is described in detail in the aforementioned U.S. Patent Application Serial No. 08/856,428 and removes the PN spreading that was described in equations 1 and 2 above.

Again, the exemplary embodiment illustrates a method for distinguishing between two possible rates. One skilled in the art will understand that the receiver structure shown can be extended to an arbitrary number of potential rates by increasing the number of demodulator/decoder elements 114. In the exemplary embodiment, the complex despread packet data is provided to demodulator/decoders 114a and 114b. It will be understood by one skilled in the art that the demodulation can also work with one hardware element running at a higher rate. Moreover, the receiver can descramble the pilot using the different long code masks corresponding to the different rate hypothesis and estimate the resulting energy obtained by using each hypothesis.

Demodulator/decoder 114a demodulates the data using a long code mask associated with the first data rate hypothesis and demodulator/decoder 114b demodulates the data using a long code mask associated with the second data rate. As described previously, the two long PN codes corresponding to the two rate hypotheses will be uncorrelated. The demodulation and decoding of the data using the correct long code mask (corresponding to the correct rate hypothesis) will demodulate and decode correctly, while the decoding of the

data using the incorrect long code mask (corresponding to the incorrect rate hypothesis) will demodulate and decode incorrectly. The correct demodulation and decoding, corresponding to the correct hypothesis of the data will be detected by CRC check and selector 140. CRC check and selector element 140 will generate a set of CRC bits from the decoded data estimates and will compare those with the decoded CRC estimates. If the generated CRC bits match the decoded CRC estimates, the data at that rate will be provided to the user.

Turning to the details of demodulator/decoders 114, the complex PN despread packets are provided to descrambling elements 118 and 120. The packets are descrambled in accordance with long PN codes generated by long code generators 116 which generate the long codes in accordance with a long code mask corresponding to the mobile station being received and a rate from the set of possible rates as described with respect to the transmission process.

The descrambled data packets from descrambling elements 118 and 120 are provided to subchannel despreading elements 122, 124, 126 and 128, which remove the Walsh subchannel coverings from the received data stream. Subchannel despreading elements 122 and 124 remove the data subchannel covering from the descrambled data in accordance with the data subchannel Walsh sequence (W_{data}). Subchannel despreading elements 126 and 128 remove the data subchannel coverings from the descrambled data in accordance with the pilot subchannel Walsh sequence (W_{pilot}).

The output from subchannel despreading elements 126 and 128 are provided to pilot filter 132 which performs a moving average filtering operation on the signal in order to reduce the effects of noise on the received pilot signal. The I and Q components from pilot filter 132 are provided to dot product circuit 130 which performs a coherent demodulation of the QPSK data channel. The design of dot product elements is well known in the art and is described in detail in U.S. Patent No. 5,506,865, entitled "PILOT CARRIER DOT PRODUCT CIRCUIT", which is assigned to the assignee of the present invention and incorporated by reference herein.

The demodulated data signal out of dot product element 130 is provided to repetition combiner 134. Repetition combiner 134 combines the repeated symbols in the packet in accordance with the rate hypothesis being tested by the demodulation/decoder 114. Deinterleaver 136 which reorders the symbols in accordance with a rate dependent deinterleaving format and provides the combined symbols. The reordered symbols are provided to decoder 138 which decodes the symbols. In the exemplary embodiment, decoder 138 is a turbo decoder, the implementation of which is well known in the art and is described in detail in U.S. Patent No. 5,446,747. The present invention is equally applicable to other decoder structures such as trellis decoders and block decoders.

The decoded data packets from demodulator/decoder 138a and 138b are provided to CRC check and selector 140. In the exemplary embodiment, the CRC bits are checked and the data that passes the CRC check is output as the data demodulated and decoded at the correct rate. The present invention also anticipates the use of other methods for packet selection such as those involving the use of the accumulated metric from decoder 138, estimates of received pilot energy following despreading by the different long code masks, or the use of symbol error rate (SER), which depend on the number of symbol corrections made by decoder 138.

FIG. 5 illustrates a second receiver system for receiving the waveform transmitted in accordance with FIG. 1. The signal is received at antenna 200 and provided to receiver (RCVR) 202, which filters and amplifies the received signal. The received signal is then provided to downconverters 204 and 206, which downconvert the received signal in accordance with a QPSK downconversion methodology as is well known in the art. The I and Q components of the downconverted signals are provided to baseband filters (BBF) 208 and 210, which filter the signals and provide the baseband signals to complex PN despreading means 212, which despread the signals in accordance with pseudonoise sequences PN_I and PN_Q. The implementation of complex PN despreading means 212 is described in detail in the aforementioned U.S. Patent

Application Serial No. 08/856,428 and removes the PN spreading that was described in equations 1 and 2 above.

Again, the exemplary embodiment illustrates a method for distinguishing between two possible rates. One skilled in the art will understand that the receiver structure shown can be extended to an arbitrary number of potential rates by increasing the number of demodulator elements 214. In the exemplary embodiment, the complex PN despread packet data is provided to demodulators 214a and 214b.

Demodulator 214a demodulates the data using a long code mask associated with the first data rate hypothesis and demodulator 214b demodulates the data using a long code mask associated with the second data rate hypothesis. As described previously, the two long PN codes corresponding to the two rate hypotheses will be uncorrelated. The demodulation of the data using the correct long code mask (corresponding to the correct rate hypothesis) will demodulate correctly yielding a high energy demodulated signal, while the decoding of the data using the incorrect long code mask (corresponding to the incorrect rate hypothesis) will demodulate incorrectly yielding low energy noise. The correct demodulation, corresponding to the correct rate hypothesis will be detected by selector 236, which will compare the energies of the two demodulated data streams.

Selector element 236 will provide the correctly demodulated data packet to repetition combiner 238 which combines the data in accordance with the detected rate of the received data. The combined symbols are provided to deinterleaver 240 that reorders the symbols in accordance with a deinterleaving format selected on the basis of the determined rate. The reordered symbols are provided to decoder 242, which decodes the symbols in accordance with a predetermine error correction format. In the exemplary embodiment, decoder 242 is a turbo decoder, though the present invention is equally applicable to other decoders such as trellis or block decoders. The decoded data packet is then output to the user.

18

Turning to the details of demodulators 214, the complex PN despread packets are provided to descrambling elements 218 and 220. The packets are descrambled in accordance with long PN codes generated by long code generators 216 which generate the long codes in accordance with a long code mask corresponding to a rate from the set of possible rates as described with respect to the transmission process.

The descrambled data packets from descrambling elements 218 and 220 are provided to subchannel despreading elements 222, 224, 226 and 228, which remove the Walsh subchannel coverings from the received data stream. Subchannel despreading elements 222 and 224 remove the data subchannel covering from the descrambled data in accordance with the data subchannel Walsh sequence (W_{data}). Subchannel despreading elements 226 and 228 remove the data subchannel coverings from the descrambled data in accordance with the pilot subchannel Walsh sequence (W_{pilot}).

The output from subchannel despreading elements 226 and 228 are provided to pilot filter 232 which performs a moving average filtering operation on the signal in order to reduce the effects of noise on the received pilot signal. The I and Q components from pilot filter 232 are provided to dot product circuit 230 which performs a coherent demodulation of the QPSK data channel. The design of dot product elements is well known in the art and is described in detail in U.S. Patent No. 5,506,865, entitled "PILOT CARRIER DOT PRODUCT CIRCUIT", which is assigned to the assignee of the present invention and incorporated by reference herein.

The demodulated data signal out of dot product element 230 is provided to energy calculator 234 and to selector 236. Energy calculator 234 computes the energy of the demodulated packet and provides the energy value to selector 236. Selector 236 selects the demodulated packet with the greatest amount of energy. The selected packet is provided to repetition combiner 238 which combines the redundant symbol energies and provides the combined energies to deinterleaver 240. Dinterleaver 240 reorders the combined symbol energies and

provides them to decoder 242. Decoder 242 decodes the data and provides it to the user.

FIG. 6 illustrates a transmission system for the second exemplary embodiment of the present invention. In the second embodiment of the present invention, each data packet is transmitted with a preamble indicating the data rate of the transmitted packet. The data packet is provided to CRC and tail bit generator 300. CRC and tail bit generator 300 generates a set of redundant check bits and appends those check bits along with a set of tail bits to the packet.

The packet output by CRC and tail bit generator 300 is provided to encoder 302, which performs a forward error coding on the packet. In the exemplary embodiment, encoder 302 is a turbo encoder. The encoded symbols are provided to interleaver 304 which reorders the symbols in accordance with a predetermined interleaving format. The reordered symbols are provided to repetition generator 306 which generates a set of redundant symbols to output a packet of a fixed number of symbols regardless of the data rate of the packet.

The packet from repetition generator 306 is provided to gain adjustment means 308 which adjusts the gain of the packet based on the data rate of the packet and the E_b/N_0 required for proper transmission of the reverse link signal. The gain adjusted packet is provided to multiplexer 312. In the exemplary embodiment, multiplexer 312 performs a simple switching operation that punctures a rate indication preamble into the data packet by overwriting a first portion of the frame. The overwritten data could be recovered by means of the a forward correction decoder at the receiver. In an alternative embodiment, the packet length could be adjusted so that none of the data would require to be overwritten by the preamble.

In the current embodiment of the preset invention, the set of rate indication preambles are of lengths that vary in accordance with the data rate of the packet to be transmitted. In the exemplary embodiment, the lower the data rate of the packet the longer will be the preamble included with the packet. In the exemplary embodiment, the set of possible rates differ from one another by

factors of two, for example 9.6 Kbps, 19.2 Kbps, 38.4 Kbps and 76.8 Kbps. In the exemplary embodiment, the length of the preamble varies in inverse proportion with the data rate of the packet, in this way the proportion of the data in the packet that is overwritten by the preamble remains constant due the variable duration of the packets to be transmitted as a function of the data rate.

Turning to FIG. 7, an exemplary set of four preambles is illustrated. In the exemplary embodiment, FIG. 7A illustrates the proposed preamble for the highest possible rate in the rate set (i.e. 76.8 Kbps). FIG. 7B illustrates the proposed preamble for the second highest possible rate in the rate set (i.e. 36.4 Kbps). FIG. 7C illustrates the proposed preamble for the third highest possible rate in the rate set (i.e. 19.2 Kbps). FIG. 7D illustrates the proposed preamble for the lowest possible rate in the rate set (i.e. 9.6 Kbps).

The important characteristic to be observed regarding the proposed preamble structure is that the preamble sequences are orthogonal over selected time periods. For example, the preamble sequence illustrated in FIG. 7A is orthogonal to preamble sequences illustrated in FIGS. 7B, 7C and 7D over the period of its duration (0 to 4T). Similarly, the preamble sequence illustrated in FIG. 7B is orthogonal to the preamble sequences illustrated in FIGS. 7C and 7D over the period of its duration (0-8T). Lastly, the preamble sequence illustrated in FIG. 7C is orthogonal to the preamble sequence illustrated in FIG. 7D over the period of its duration (0-16T). The benefit of the orthogonality of the preamble waveforms is realized at the receiver, by making detection of the preamble more accurate, because the correlation between two orthogonal sequences is zero. Thus, by passing the preamble sequence through a correlator, such as a matched filter, will yield zero energy for all preamble rate hypotheses except the correct preamble rate hypothesis. FIGS. 7E-7H illustrate an alternative set of proposed preamble waveforms which manifest the same orthogonal properties as those illustrated in 7A-7D.

The data packet is provided to subchannel spreading element 310 which covers the packet in accordance with the Walsh sequence W_{data}. In addition, the rate indication signal is Walsh covered by subchannel spreading element 311.

30

The data signal and the preamble signal are combined by multiplexer 312. In an alternative embodiment, the data packet could be combined with the preamble prior to performing the Walsh covering operation. The combined Walsh covered packet is then provided to scrambling means 314, which scrambles the packet in accordance with a long code sequence provided by long code generator and mask 316. The long code is uniquely assigned to the remote station and used to distinguish the transmission of different remote stations simultaneously communicating with a given base station.

In the modulation of the pilot signal, a set of predetermined pilot symbols are provided to Walsh covering means 318. In the exemplary embodiment, the pilot symbol sequence is a string of all zeroes. Walsh covering means 318 covers the pilot symbols in accordance with the Walsh sequence W_{pilot}. The Walsh covered pilot symbols are provided to spreading means 320 which scrambles the Walsh covered pilot symbols in accordance with a long PN sequence from long code generator and mask 316. The outputs from scramblers 314 and 320 are input to complex PN spreading element 322 along with pseudonoise sequences PN_I and PN_Q. Complex PN spreading element 322 performs a complex PN spreading on the input signal in accordance with equations 1 and 2 above.

The I and Q channel outputs from the complex PN spreading element 322 are provided to baseband filters (BBFs) 324 and 326. Baseband filters 324 and 326 filter the baseband signals and provide the filtered signals to upconverters 328 and 330. Upconverters 328 and 330 upconvert the signals, in accordance with a QPSK modulation format wherein the resulting upconverted signals are 90 degrees out of phase with one another. The upconverted signals are summed in summing element 332 and provided to transmitter (TMTR) 334 where the signal is amplified and filtered and transmitted through antenna 336.

FIG. 8 illustrates the receiver system of the second embodiment. The signal is received at antenna 400 and provided to receiver (RCVR) 402, which filters and amplifies the received signal. The received signal is then provided to downconverters 404 and 406, which downconvert the received signal in

accordance with a QPSK downconversion methodology as is well known in the art. The I and Q components of the downconverted signals are provided to baseband filters (BBF) 408 and 410, which filter the signals and provide the baseband signals to complex PN despreading element 412. The implementation of complex PN despreading element 412 is described in detail in the aforementioned U.S. Patent Application Serial No. 08/856,428 and removes the complex PN spreading that was described in equations 1 and 2 above.

The despread I and Q signals are provided descrambling elements 416 and 418. Descrambling elements 416 and 418 descramble the signals in accordance with a long code provided by long code and mask generator 414. The descrambled I and Q signals are provided by descrambling elements 416 and 418 to subchannel despreading elements 426, 428, 430 and 432, which remove the Walsh subchannel coverings from the received signals. Subchannel despreading elements 426 and 428 remove the data subchannel covering from the descrambled data in accordance with the data subchannel Walsh sequence (W_{data}). Subchannel despreading elements 430 and 432 remove the pilot subchannel coverings from the descrambled data in accordance with the pilot subchannel Walsh sequence (W_{pilot}).

The output from subchannel despreading elements 430 and 432 are provided to pilot filter 434 which performs a moving average filtering operation on the signal in order to reduce the effects of noise on the received pilot signal. The I and Q components from pilot filter 434 are provided to dot product circuit 436 which performs a coherent demodulation of the QPSK data channel. The design of dot product elements is well known in the art and is described in detail in U.S. Patent No. 5,506,865, entitled "PILOT CARRIER DOT PRODUCT CIRCUIT", which is assigned to the assignee of the present invention and incorporated by reference herein.

The demodulated data signal out of dot product element 436 is provided to demultiplexer (De-Mux) 420. Demultiplexer 420 outputs the data initially to preamble detector 424. Preamble detector 424 determines the rate indicated by the despread preamble. Many implementations of preamble detector are

possible. For example preamble detector 424 can be implemented using a bank of matched filters or other correlators. Upon finding a preamble with sufficient correlation energy to one of the predetermined set of preambles, the rate is declared as having been successfully detected. In an alternative embodiment, the preamble could be detected noncoherently, in which case the despread data would be provided directly to the preamble detector through demultiplexer 420 from subchannel despreading elements 426 and 428.

Upon successful detection of one of the candidate preambles, preamble detector 424 sends a signal indicative of the detected rate to repetition combiner 438, deinterleaver 440 and decoder 442 which perform their operations in accordance with this information. In addition, upon detection of the end of the preamble message, preamble detector sends a signal indicating the detection of the end of the preamble to demultiplexer 420, in response to which demultiplexer 420 begins to output the despread data to repetition combiner 438.

Repetition combiner 438 combines the repeated symbol energies in the packet in accordance with the detected rate of the received packet. The combined symbol energies are provided to deinterleaver 440, which reorders the symbol energies in accordance with a deinterleaving format selected in accordance with the rate signal from preamble detector 424. The reordered symbols are provided to decoder 442 which decodes the symbols. In the exemplary embodiment, decoder 442 is a turbo decoder, the implementation of which is well known in the art and is described in detail in U.S. Patent No. 5,446,747. The present invention is equally applicable to other decoder structures such as trellis decoders and block decoders. The decoded data estimates are output by decoder 442 to the user.

FIG. 9 illustrates the preferred embodiment of the present invention for transmitting variable rate data. In the preferred embodiment, packets at different data rates contain a different number of information bits but span the same duration of time (i.e. 2 frames=32 slots= 53 msec). The data transmission system again transmits a control channel distinct from a data channel. In the

third embodiment of the present invention, the control channel includes three types of information, which are time multiplexed together. The first type of information provided on the control channel is the pilot signal. The second is a rate indication message that indicates the rate of the data packet being transmitted concurrently with the control channel information. The third is a rate request message which is the request by the remote station for a serving base station to provide data up to that rate.

In the preferred embodiment, the rate request information provides an indication both of the rate at which the remote station desires data to be downloaded to it, and also the base station or base station sector which the remote station wishes to perform the data transmission. In the preferred embodiment, the indication of which base station or sector of a predetermined set of base stations or sectors is based on a spreading function that will only be properly decoded by the base station sought to transmit to the remote station.

In identifying the Walsh function the superscript identifies the order of the Walsh function, and the subscript identifies the indice of the Walsh function of that order. Tables 1-3 below provide the Walsh function used in the current description.

Table 1

W_0^2	00
W_1^2	00

Table 2

W_0^4	0000
W_1^4	0101
W_2^4	0011
W_3^4	0110

Table 3

W_0^8	0000 0000
W_1^8	0101 0101
W_2^8	0011 0011
W_3^8	0110 0110
W_4^8	0000 1111
W_5^8	0101 1010
W_6^8	0011 1100
W_7^8	0110 1001

As in the previous two embodiments, the pilot channel symbols are a simple predetermined sequence. In the exemplary embodiment, the pilot symbols are a string of all zeroes which are provided to multiplexer (MUX) 500. In the exemplary embodiment, the rate indication signal is a biorthogonal waveform. Thus, the input to Walsh covering element 502 is a binary value, the switching of which will result in the inversion of the resultant waveform. The symbols from Walsh covering element 502 are provided to Walsh covering element 504 which provides a second Walsh covering of the data, in which the indice of the Walsh cover used provides the second portion of the rate indication value. In the exemplary embodiment, the second Walsh covering can take on eight different forms which in combination with the input bit allows for the specification of up to 16 different rates. The Walsh symbols from Walsh covering element 504 are provided to multiplexer 500. In the exemplary embodiment, the rate indication is punctured into the pilot symbols once every slot for 32 consecutive slots (2 frames) spanned by a reverse link packet. This is to provide time diversity in a fading environment.

Turning to the rate request message, the exemplary embodiment provides for the specification of up to 16 possible forward link (from the base station to the remote station) data rates. A 4-bit index is provided to block

encoder 506. In the exemplary embodiment, block encoder 506 which maps the 4-bit input into a set of 8 possible Walsh symbols or their inverse using a (8,4,4) block code, the design and implementation of which are well known in the art. The block encoded rate request is then provided to repetition generator 508 which provides redundancy for the purposes of time diversity to protect against burst errors. The rate request message is then provided to gain adjustment element 510 which adjusts the gain to provide for proper reception of the rate request message. The gain adjusted signal is provided to Walsh covering element 512 which provides additional redundancy into the rate request message.

The Walsh covered message from Walsh covering element 512 is then provided to Walsh covering element 514. The purpose of Walsh covering element 514 is to indicate the best base station or base station sector from which to receive forward link data. In the exemplary embodiment, the remote station measures the C/I of transmissions from a set of base stations from which it is capable of receiving data. The base station which can provide data to the remote station at the highest C/I is selected by the remote station to download data to the remote station. The selected base station is indicated by using a Walsh sequence that will only be properly to be demodulated by the selected base station. All base stations and sector in the remote stations active set (or set of base station/sectors capable of transmission to the remote station) will attempt to demodulate the signal using an assigned W_i^8 sequence. However, only the selected base station will correctly demodulate the request and will transmit to the remote station. The encoded rate request information, the rate indication and the pilot data are time multiplexed together by multiplexer 500. The multiplexed control signal is provided to subchannel spreading element 516, which covers the resulting signal with a Walsh covering that is orthogonal to that used to cover the data subchannel.

On the data subchannel, variable rate data packets are provided to CRC and tail bit generator 518. CRC and tail bit generator 518 generates a set of

29

redundant check bits and append those check bits along with a set of tail bits used to the packet.

The packet output by CRC and tail bit generator 518 is provided to encoder 520, which performs a forward error coding on the variable rate data packet. In the exemplary embodiment, encoder 520 is a turbo encoder. The encoded symbols are then provided to interleaver 522 which reorders the symbols in accordance with a predetermined interleaving format. The reordered symbols are then provided to repetition generator 524 which generates a set of redundant symbols to output a packet containing a fixed number of symbols regardless of the data rate of the packet.

The packet from repetition generator 524 is provided to gain adjustment means 526 which adjusts the gain of the packet based on the data rate of the packet and the E_b/N_0 required for proper transmission of the reverse link signal. The gain adjusted packet is provided to subchannel spreading element 528, which covers the packet with a Walsh sequence that is orthogonal to the Walsh sequence used to cover the control packet.

The data packet and the control packet are provided to scrambling means 534 and 532, respectively. Scrambling elements 532 and 534 scramble the packets in accordance with a long code sequence provided by long code generator and mask 530. The outputs from scrambling elements 532 and 534 are input to complex PN spreading element 536 along with pseudonoise sequences PN_I and PN_Q. Complex PN spreading element 536 performs a complex PN spreading on the input signal in accordance with equations 1 and 2 above.

The I and Q channel outputs from the complex PN spreading element 536 are provided to baseband filters (BBFs) 538 and 540. Baseband filters 538 and 540 filter the baseband signals and provide the filtered signals to upconverters 542 and 544. Upconverters 542 and 544 upconvert the signals, in accordance with a QPSK modulation format wherein the resulting upconverted signals are 90 degrees out of phase with one another. The upconverted signals are summed in summing element 546 and provided to transmitter (TMTR) 548

where the signal is amplified and filtered and provided through duplexer 549 for transmission through antenna 550.

In addition, remote station 554 includes a variable rate receive subsystem 552 for receiving forward link variable rate data from a base station or plurality of base stations capable of transmitting to remote station 554. The forward link variable rate data is received through antenna 550 and provided through duplexer 549 to variable rate receive subsystem 552.

FIG. 10 illustrates an exemplary embodiment of the receiver for the third embodiment. The signal is received at antenna 600 and provided to receiver (RCVR) 602, which filters and amplifies the received signal. The received signal is then provided to downconverters 604 and 606, which downconvert the received signal in accordance with a QPSK downconversion methodology as is well known in the art. The I and Q components of the downconverted signals are provided to baseband filters (BBF) 608 and 610, which filter the signals and provide the baseband signals to complex PN despreading element 612. The implementation of complex PN despreading element 612, which removes the complex PN spreading that was described in equations 1 and 2. An implementation of complex PN despreading element 612 is described in detail in the aforementioned U.S. Patent Application Serial No. 08/856,428.

The complex PN despread packets are provided to descramblers 614 and 618. The packets are descrambled in accordance with long PN codes generated by long code generators 618 which generate the long code sequence as described above with respect to previous embodiments.

The descrambled data packets from descramblers 614 and 616 are provided to subchannel despreading elements 620, 622, 624 and 626, which remove the Walsh subchannel coverings from the received data stream. Subchannel despreading elements 620 and 622 remove the data subchannel covering from the descrambled data in accordance with the data subchannel Walsh sequence (W_2^4). Subchannel despreading elements 624 and 626 remove the data subchannel coverings from the descrambled data in accordance with the pilot subchannel Walsh sequence (W_0^4).

The output from subchannel despreaders elements 624 and 626 are provided to demultiplexer (De-Mux) 628. Demultiplexer 628 separates out the different portions of the received control channel corresponding to the pilot symbols, the rate indication symbols and the data request symbols and outputs that data to three separate outputs.

The pilot symbols provided by demultiplexer 628 onto a first output are provided to pilot filter 632 which performs a moving average filtering operation on the signal in order to reduce the effects of noise on the received pilot signal. The I and Q components from pilot filter 632 are provided to dot product circuit 630 which performs a coherent demodulation of the QPSK data channel. The design of dot product elements is well known in the art and is described in detail in U.S. Patent No. 5,506,865, entitled "PILOT CARRIER DOT PRODUCT CIRCUIT", which is assigned to the assignee of the present invention and incorporated by reference herein.

The demodulated data signal out of dot product element 630 is provided to repetition combiner 638. Repetition combiner 638 combines the repeated symbols in the packet in accordance with the detected reverse link rate signal provided by rate indication decoder 634. The combined symbol energies are provided to deinterleaver 640 which reorders the symbols in accordance with the detected rate indication signal provided by rate indication decoder 634. The reordered symbols are provided to decoder 642 which decodes the symbols in accordance with the detected rate indication signal. In the exemplary embodiment, decoder 642 is a turbo decoder, the implementation of which is well known in the art and is described in detail in U.S. Patent No. 5,446,747. The present invention is equally applicable to other decoder structures such as trellis decoders and block decoders.

Demultiplexer 628 provides the received symbol energies corresponding to the rate indication signal on a second output to rate indication decoder 634. Rate indication decoder 634 can be implemented in a variety of ways such as by using a bank of correlators to correlate the received symbol energies with the possible rate indication waveforms. The waveform that has the highest

correlation energy would be detected as the transmitted waveform, thus determining the rate indication value. The rate indication value is provided to repetition combiner 638, deinterleaver 640 and decoder 642 to assist in the operation of those elements.

Demultiplexer 628 provides the received symbol energies corresponding to the rate request message signal on a third output to rate request (DRQ) decoder 636. Each base station in the active set of the remote station would attempt to decode the rate request message using an assigned Walsh sequence. Only the base station that the remote station desires to transmit the data will be able to correctly decode the rate request message. After the selected base station or sector removes the Walsh covering from the rate request message, the message is block decoded to provide the requested rate information to the base station. This information is provided to a control processor in the selected base stations or sector which schedules data transmissions to the remote station in accordance with this rate request.

The previous description of the preferred embodiments is provided to enable any person skilled in the art to make or use the present invention. The various modifications to these embodiments will be readily apparent to those skilled in the art, and the generic principles defined herein may be applied to other embodiments without the use of the inventive faculty. Thus, the present invention is not intended to be limited to the embodiments shown herein but is to be accorded the widest scope consistent with the principles and novel features disclosed herein.

WE CLAIM:

CLAIMS

1. A system for transmitting a variable rate data packet, comprising:
data coding means for receiving said variable rate data packet and for encoding said variable rate data packet; and
rate indication coding means for receiving a rate indication signal indicating the rate of said variable rate packet and for encoding said rate indication in accordance with a predetermined set of encoding formats wherein the encoding formats are selected in accordance with the value of the rate indication signal.

2. The variable rate transmission system of Claim 1 wherein said rate indication coding means selects a Walsh sequence from a predetermined set of Walsh sequences and encodes said rate indication signal in accordance with said selected Walsh sequence and wherein said Walsh sequence is indicative of said rate of said variable rate packet.

3. The variable rate transmission system of Claim 1 further comprising:
pilot coding means for encoding a set of pilot symbols to provide a pilot signal; and
multiplexer means for combining said rate indication signal and said pilot signal.

4. The variable rate transmission system of Claim 3 further comprising:
rate request coding means for receiving a rate request message and encoding said message and for providing said encoded rate request message to said multiplexer; and
wherein said multiplexer combines said rate request message with said encoded pilots symbols and said rate indication message.

5. The variable rate transmission system of Claim 1 further comprising:

first orthogonal spreading means for receiving said encoded variable data rate packet and for covering said variable rate packet in accordance with a first orthogonal covering format; and

second orthogonal spreading means for receiving said rate indication signal and for covering said rate indication in accordance with a second orthogonal covering format.

6. The variable rate transmission system of Claim 5 further comprising:

first scrambling means for receiving said orthogonal spread variable rate data packet and for scrambling said orthogonal spread variable rate data packet in accordance with a long code pseudonoise sequence; and

second scrambling means for receiving said orthogonal spread rate indication signal and for scrambling said orthogonal spread rate indication signal in accordance with said long code pseudonoise sequence.

7. The variable rate transmission system of Claim 6 further comprising:

complex PN Spreading means for receiving said PN scrambled variable rate data packet and said PN scrambled rate indication signal and for performing a complex PN spreading upon said PN scrambled variable rate data packet and said PN scrambled rate indication signal in accordance with a first PN sequence and second PN sequence.

8. A method for transmitting a variable rate data packet, comprising the steps of:

receiving said variable rate data packet and for encoding said variable rate data packet; and

receiving a rate indication signal indicating the rate of said variable rate packet; and

encoding said rate indication in accordance with a predetermined set of encoding formats wherein the encoding formats are selected in accordance with the value of the rate indication signal.

9. The method of Claim 8 wherein said step of rate indication coding comprises the steps of:

selecting a Walsh sequence from a predetermined set of Walsh sequences in accordance with the rate of said variable rate packet; and

encoding said rate indication signal in accordance with said selected Walsh sequence.

10. The method of Claim 8 further comprising the steps of:

encoding a set of pilot symbols to provide a pilot signal; and

combining said rate indication signal and said pilot signal.

11. The method of Claim 10 further comprising the steps of:

receiving a rate request message and encoding said message; and

outputting said encoded rate request message to said multiplexer;

wherein said multiplexer combines said rate request message with said encoded pilots symbols and said rate indication message.

12. The method of Claim 8 further comprising the steps of:

receiving said encoded variable data rate packet;

covering said variable rate packet in accordance with a first orthogonal covering format;

receiving said rate indication signal; and

covering said rate indication in accordance with a second orthogonal covering format.

13. The method of Claim 12 further comprising the steps of:
receiving said orthogonal spread variable rate data packet;
scrambling said orthogonal spread variable rate data packet in accordance with a long code pseudonoise sequence; and
receiving said orthogonal spread rate indication signal; and
scrambling said orthogonal spread rate indication signal in accordance with said long code pseudonoise sequence.

14. The method of Claim 13 further comprising the steps of:
receiving said PN scrambled variable rate data packet and said PN scrambled rate indication signal;
performing a complex PN spreading upon said PN scrambled variable rate data packet and said PN scrambled rate indication signal in accordance with a first PN sequence and second PN sequence.

15. A system for receiving a signal comprising a variable rate packet of data and a rate indication message indicative of the rate of said variable rate packet of data, said system comprising:
first demodulation means for demodulating said received signal in accordance with a data subchannel demodulation format;
second demodulation means for demodulating said received signal in accordance with a control subchannel demodulation format to provide a demodulated control subchannel signal; and
decoding means for extracting said rate indication message from said demodulated control subchannel signal.

16. The system of Claim 15 wherein said control subchannel signal comprises a pilot signal and a rate indication signal.

17. The system of Claim 16 wherein control subchannel signal further comprises a rate request signal.

18. The system of Claim 15 further comprising:
rate indication decoding means for decoding said rate indication signal in accordance with a plurality of decoding formats and for determining the rate

indicated in said rate indication signal in accordance with the decoding format which correctly decodes said rate indication signal.

19. The system of Claim 18 wherein said plurality of decoding formats comprise a plurality of orthogonal Walsh decoding formats.

20. The system of Claim 18 wherein said rate indication decoding means comprises a bank of correlators wherein each of said correlators performs a correlation operation corresponding to a different rate hypothesis.

21. The system of Claim 18 wherein said rate indication decoding means comprises a bank of matched filters wherein each of said matched filters performs a correlation operation corresponding to a different rate hypothesis.

22. A method for receiving a signal comprising a variable rate packet of data and a rate indication message indicative of the rate of said variable rate packet of data, said system, comprising the steps of:

demodulating said received signal in accordance with a data subchannel demodulation format;

demodulating said received signal in accordance with a control subchannel demodulation format to provide a demodulated control subchannel signal; and

extracting said rate indication message from said demodulated control subchannel signal.

23. The method of Claim 22 wherein said control subchannel signal comprises a pilot signal and a rate indication signal.

24. The system of Claim 23 wherein control subchannel signal further comprises a rate request signal.

25. The method of Claim 22 further comprising the steps of:

decoding said rate indication signal in accordance with a plurality of decoding formats; and

selecting the rate indicated in said rate indication signal in accordance with the decoding format which correctly decodes said rate indication signal.

26. The system of Claim 25 wherein said plurality of decoding formats comprise a plurality of orthogonal Walsh decoding formats.

27. The system of Claim 25 wherein said rate indication decoding performing a correlation operation corresponding to a different rate hypothesis.

28. The system of Claim 25 wherein said rate indication decoding comprises performing a plurality of matched filtering operations wherein each of said matched filtering operations performs a correlation operation corresponding to a different rate hypothesis.

29. A system for transmitting a variable rate data packet comprising:

mask selection means for selecting a long cod mask in accordance with the rate of said variable rate packet; and

spreading means for spreading said variable rate packet in accordance with said selected long code mask.

30. A system for generating a variable rate data packet comprising:

data encoding means for encoding said variable rate data packet;

mutliplexer means for receiving said encoded variable rate data packet and for receiving a preamble indicative of the rate of said variable rate data packet wherein said preamble is selected from a set of preambles of varying duration which are orthogonal to one another.

18

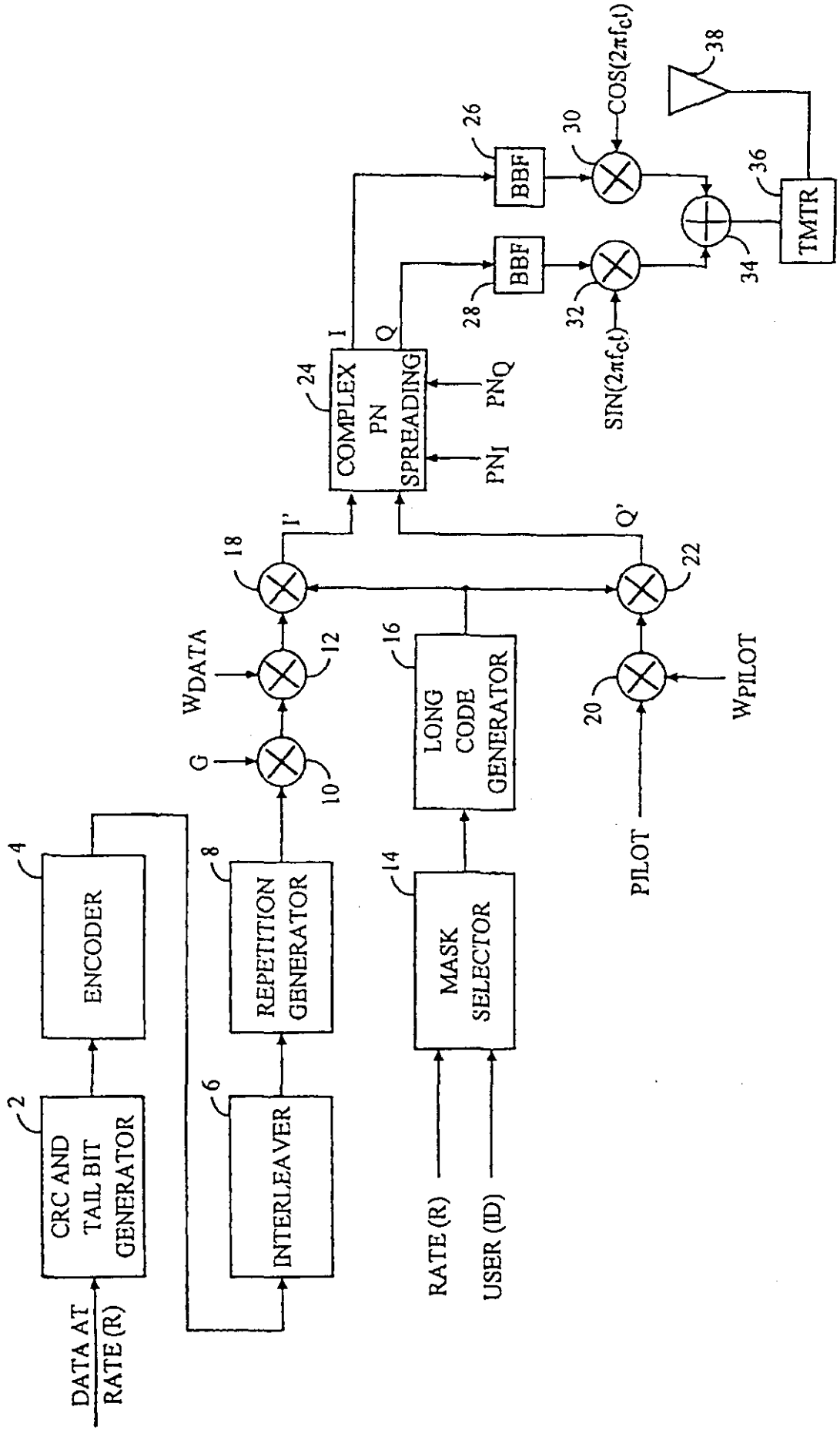
DATA AT RATE (R)
CRC AND TAIL BIT GENERATOR
2
ENCODER
4
INTERLEAVER
6
REPETITION GENERATOR
8
G
10
W_{DATA}
12
18
I'
Q'
22
20
W_{PILOT}
PILOT
LONG CODE GENERATOR
16
MASK SELECTOR
14
RATE (R)
USER (ID)
COMPLEX PN SPREADING
24
I
Q
PN_I
PN_Q
BBF
26
BBF
28
$COS(2\pi f_c t)$
30
$SIN(2\pi f_c t)$
32
34
TMTR
36
38

FIG. 1

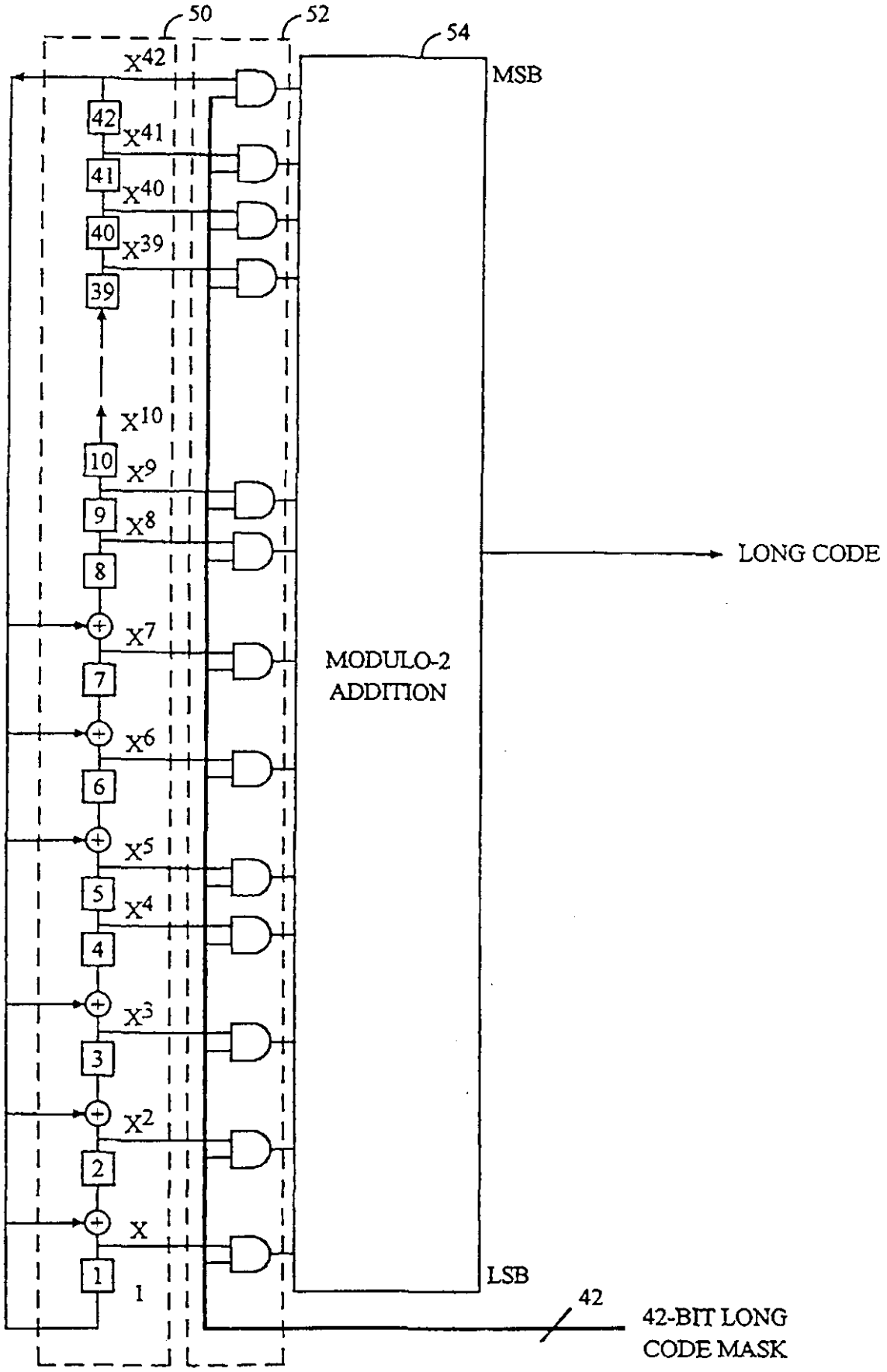
50
52
54
MSB
X^{42}
42
X^{41}
41
X^{40}
40
X^{39}
39
X^{10}
10
X^9
9
X^8
8
X^7
7
X^6
6
X^5
5
X^4
4
X^3
3
X^2
2
X
1
1
LONG CODE
MODULO-2
ADDITION
LSB
42
42-BIT LONG
CODE MASK

FIG. 2

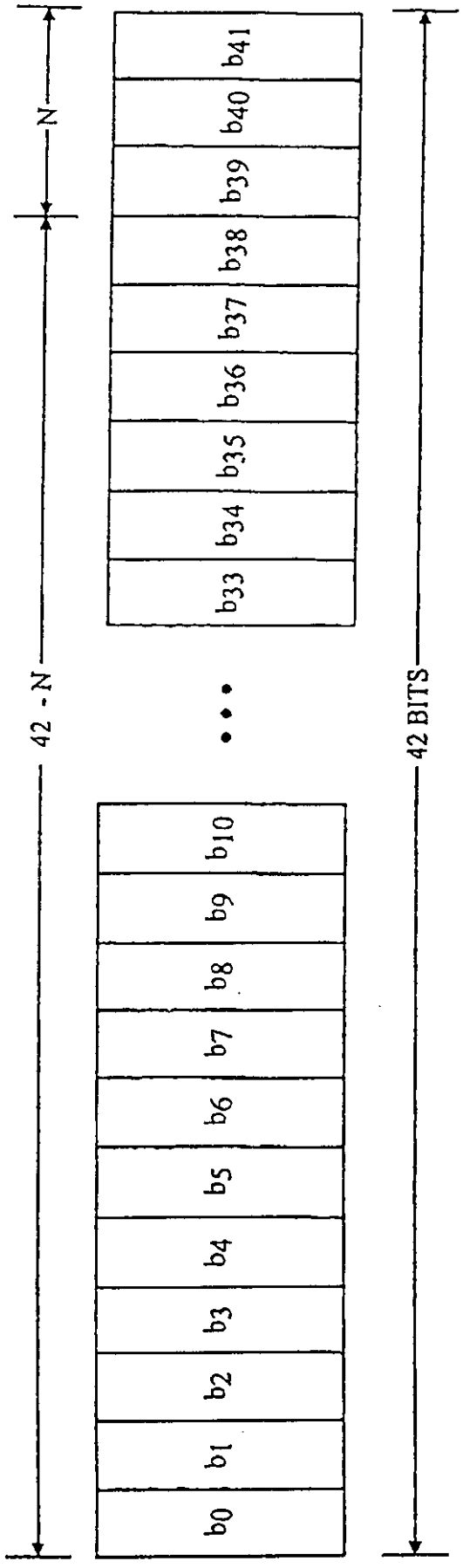
N
42 - N
42 BITS
b41
b40
b39
b38
b37
b36
b35
b34
b33
b10
b9
b8
b7
b6
b5
b4
b3
b2
b1
b0

FIG. 3

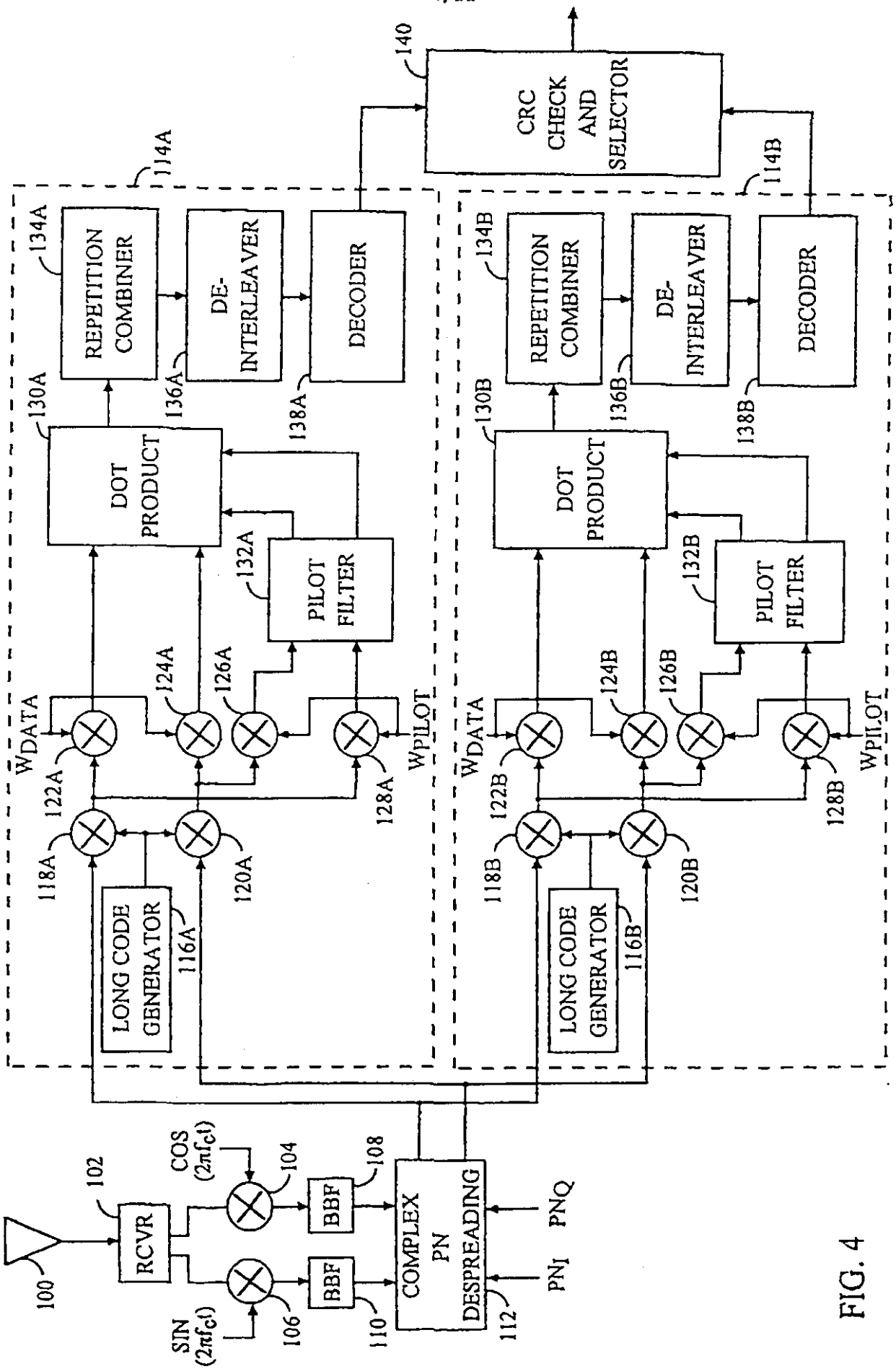
100
102
RCVR
COS ($2\pi f_{c1}t$)
SIN ($2\pi f_{c1}t$)
104
106
BBF
BBF
108
110
COMPLEX PN DESPREADING
112
PN_I
PN_Q
114A
114B
CRC CHECK AND SELECTOR
140
REPETITION COMBINER
134A
134B
DE-INTERLEAVER
136A
136B
DECODER
138A
138B
DOT PRODUCT
130A
130B
PILOT FILTER
132A
132B
W_{DATA}
W_{PILOT}
122A
122B
124A
124B
126A
126B
128A
128B
118A
118B
120A
120B
LONG CODE GENERATOR
116A
116B

FIG. 4

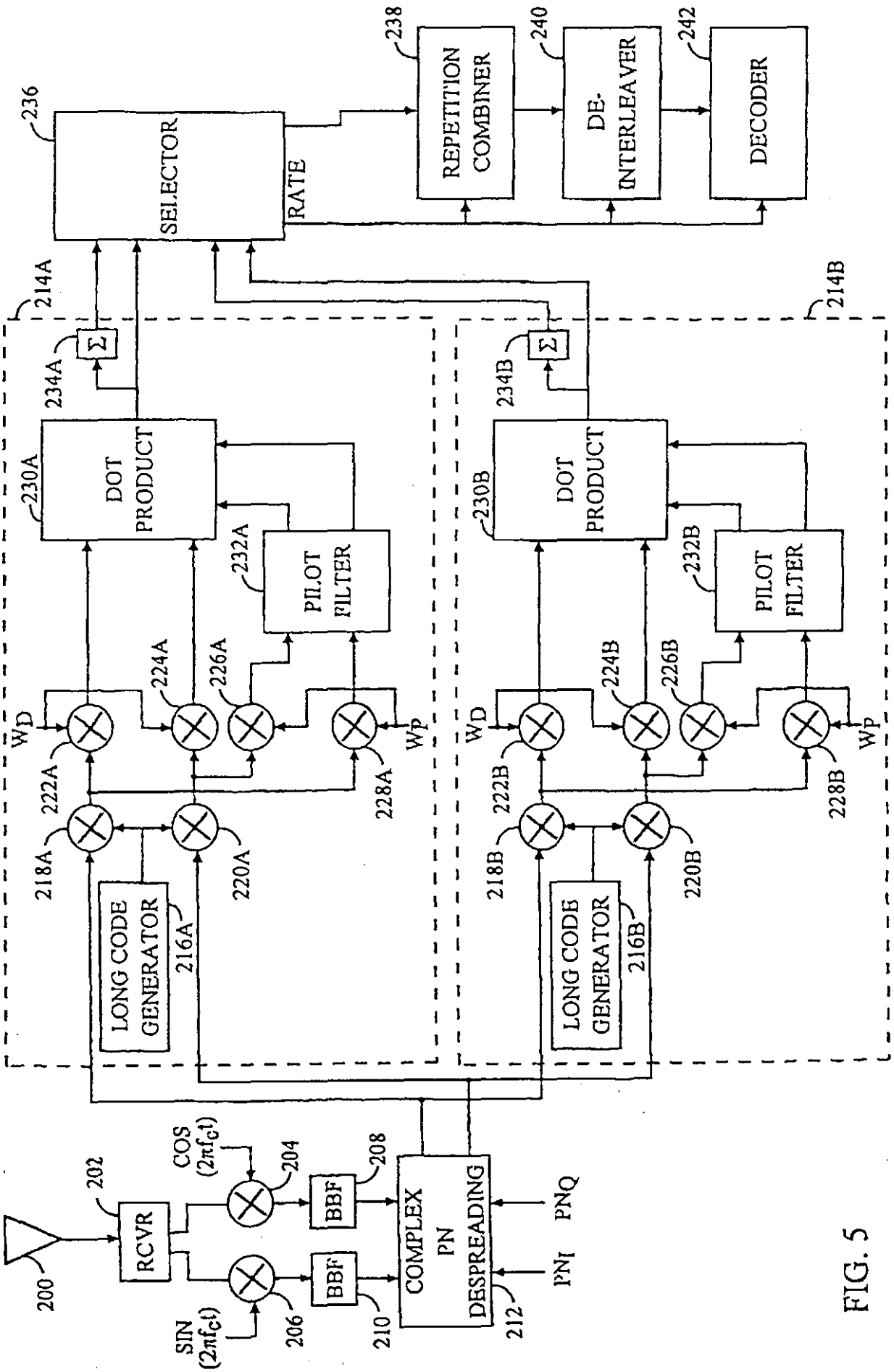
200
202
RCVR
COS (2πf_c t)
SIN (2πf_c t)
204
206
BBF
BBF
208
210
COMPLEX PN DESPREADING
212
PN_I
PN_Q
214A
214B
LONG CODE GENERATOR
216A
LONG CODE GENERATOR
216B
218A
218B
220A
220B
222A
222B
224A
224B
226A
226B
228A
228B
W_D
W_P
230A
230B
DOT PRODUCT
DOT PRODUCT
232A
232B
PILOT FILTER
PILOT FILTER
234A
234B
Σ
Σ
236
SELECTOR
RATE
238
REPETITION COMBINER
240
DE-INTERLEAVER
242
DECODER

FIG. 5

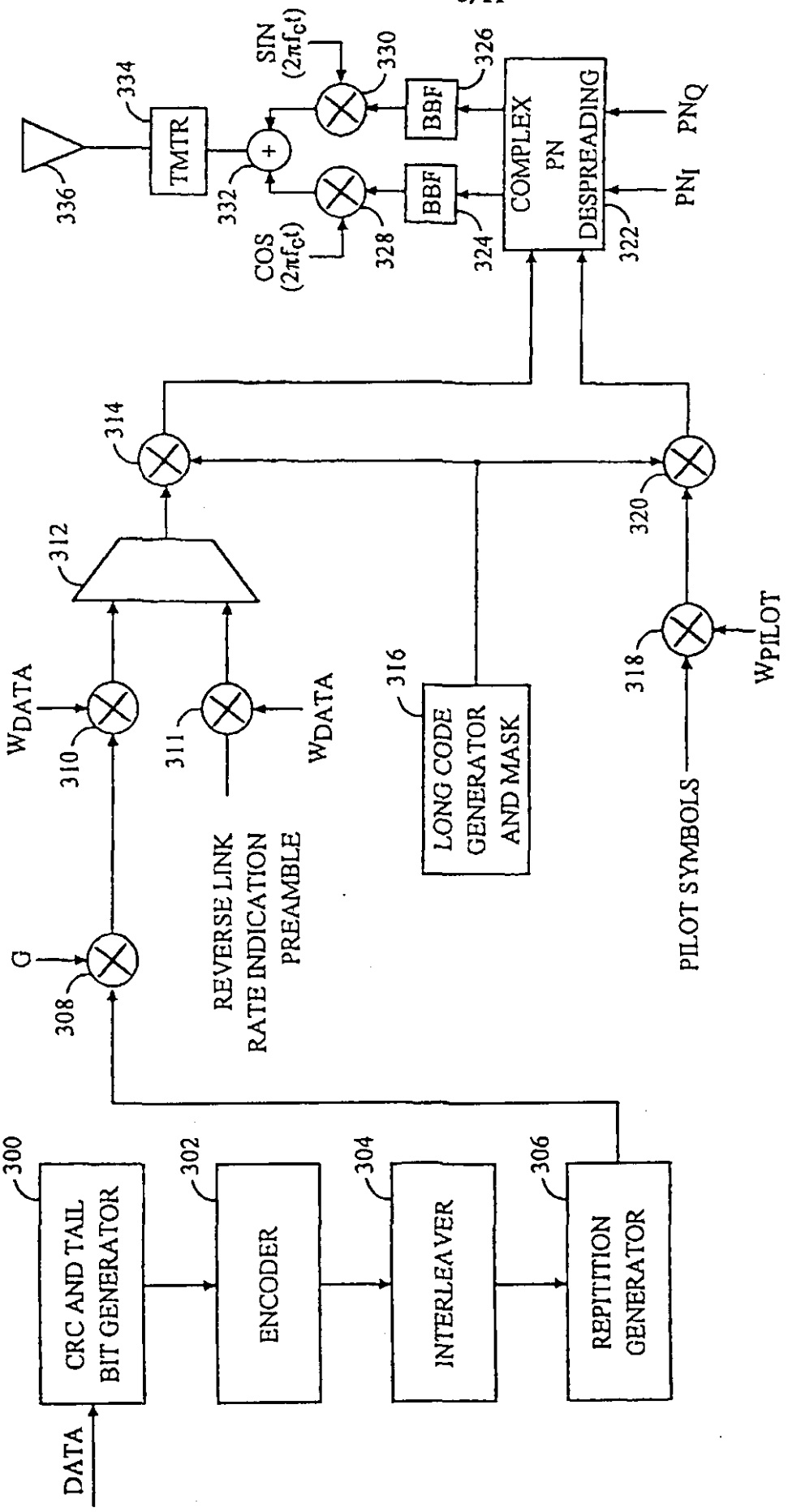
DATA
CRC AND TAIL BIT GENERATOR
300
ENCODER
302
INTERLEAVER
304
REPITITION GENERATOR
306
G
308
W_{DATA}
310
311
W_{DATA}
REVERSE LINK RATE INDICATION PREAMBLE
312
314
316
LONG CODE GENERATOR AND MASK
318
W_{PILOT}
320
PILOT SYMBOLS
COMPLEX PN DESPREADING
322
PN_I
PN_Q
BBF
324
BBF
326
COS ($2\pi f_c t$)
328
SIN ($2\pi f_c t$)
330
332
TMTR
334
336

FIG. 6

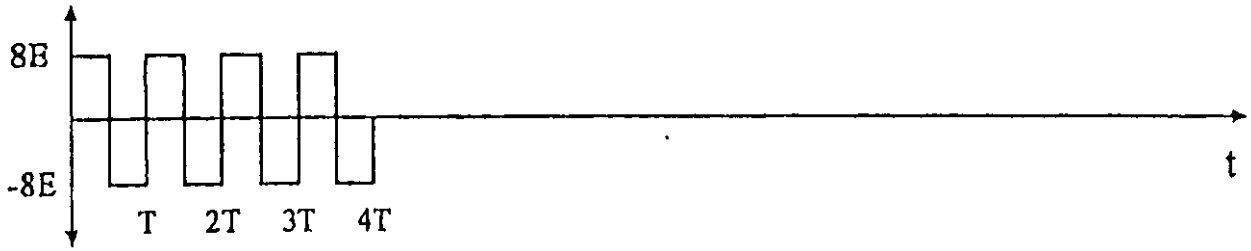

FIG. 7A

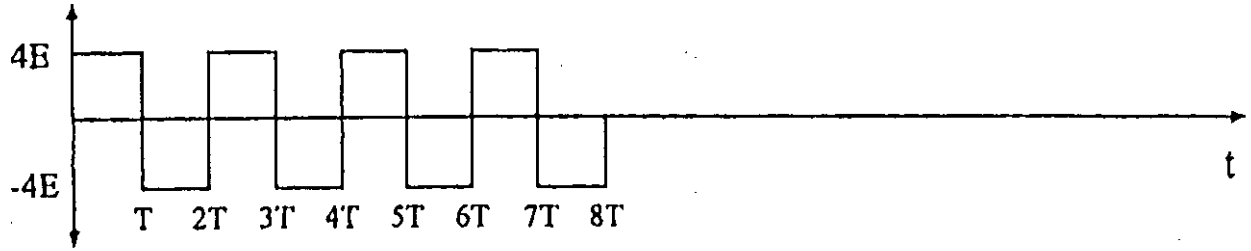

FIG. 7B

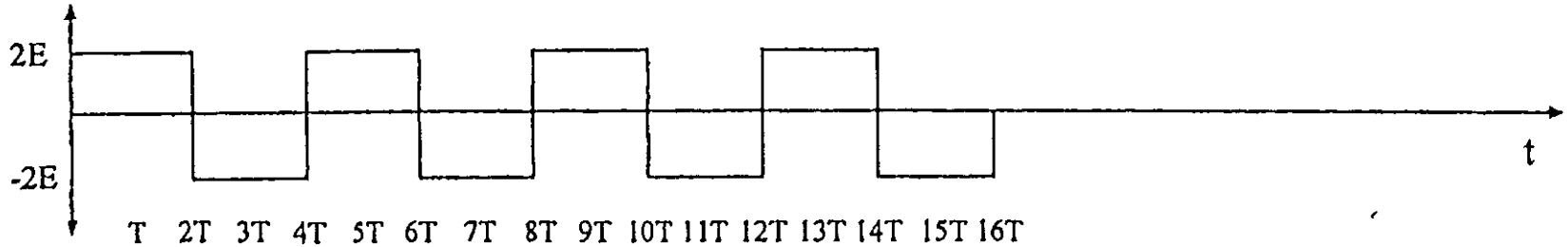

FIG. 7C

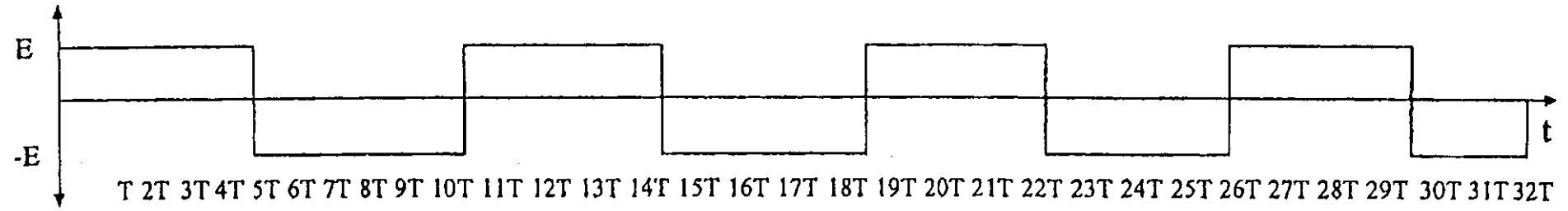

FIG. 7D

FIG. 7E

FIG. 7F

FIG. 7G

FIG. 7H

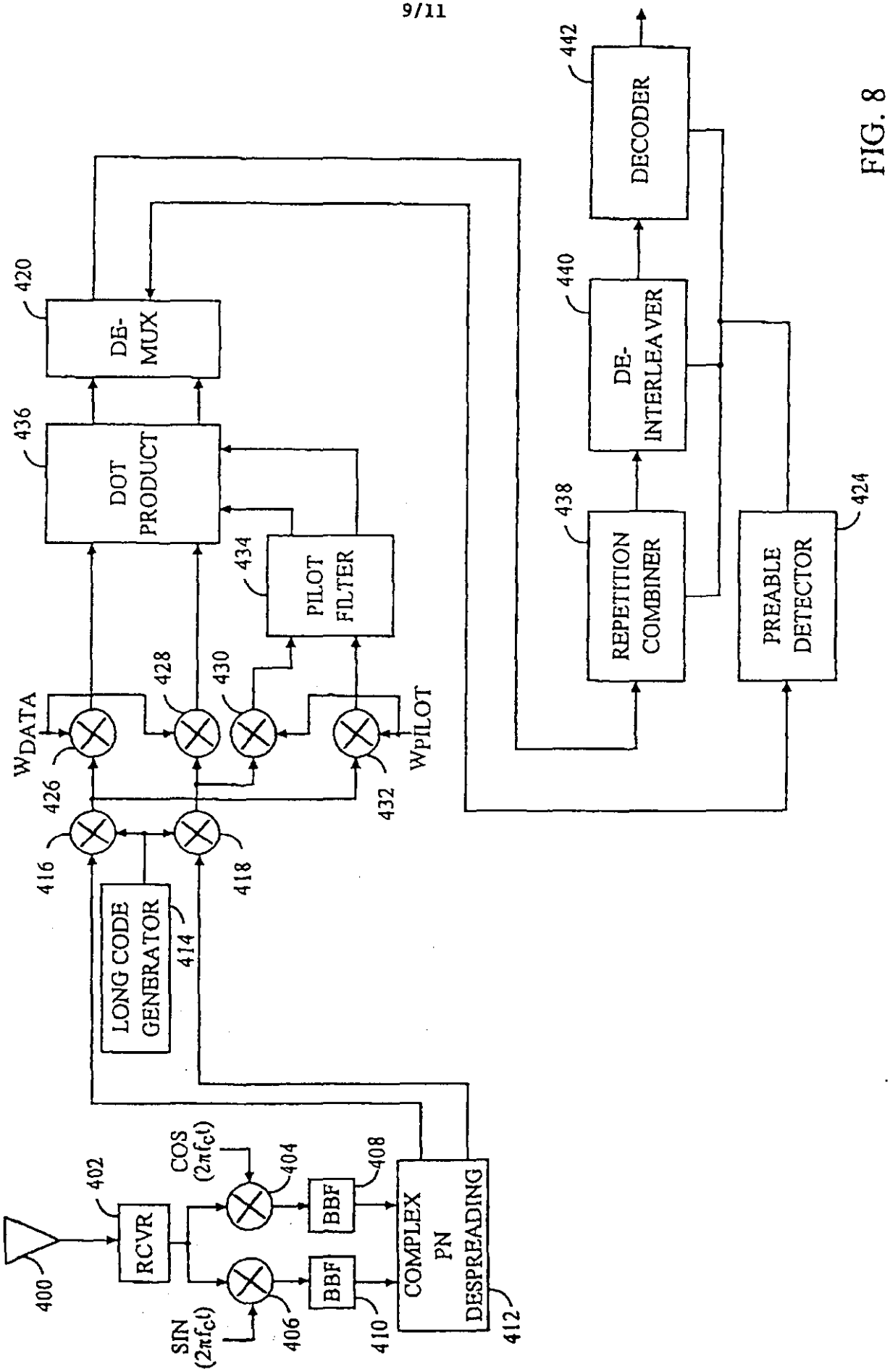
400
RCVR
402
COS ($2\pi f_c t$)
404
406
SIN ($2\pi f_c t$)
BBF
408
BBF
410
COMPLEX PN DESPREADING
412
LONG CODE GENERATOR
414
416
418
W_{DATA}
426
428
430
W_{PILOT}
432
PILOT FILTER
434
DOT PRODUCT
436
DE-MUX
420
REPETITION COMBINER
438
DE-INTERLEAVER
440
DECODER
442
PREABLE DETECTOR
424

FIG. 8

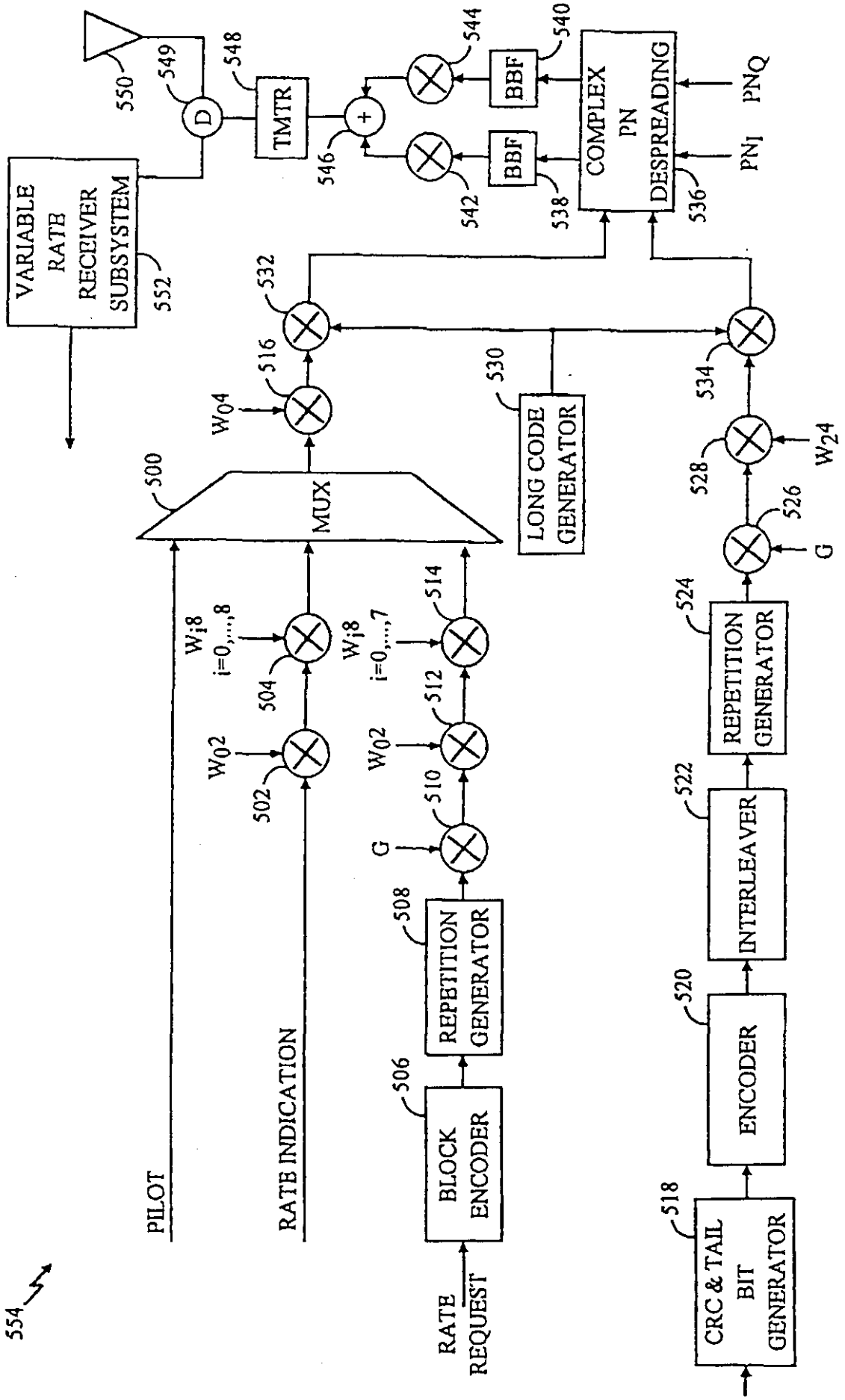
554
VARIABLE RATE RECEIVER SUBSYSTEM
552
550
549
D
548
TMTR
546
544
542
540
538
536
BBF
BBF
COMPLEX PN DESPREADING
PNI
PNQ
532
516
W_{04}
500
MUX
530
LONG CODE GENERATOR
534
528
526
W_{24}
G
PILOT
RATE INDICATION
RATE REQUEST
W_{i8} i=0,...,8
W_{i8} i=0,...,7
W_{02}
W_{02}
504
502
512
514
510
G
508
506
BLOCK ENCODER
REPETITION GENERATOR
524
REPETITION GENERATOR
522
INTERLEAVER
520
ENCODER
518
CRC & TAIL BIT GENERATOR

FIG. 9

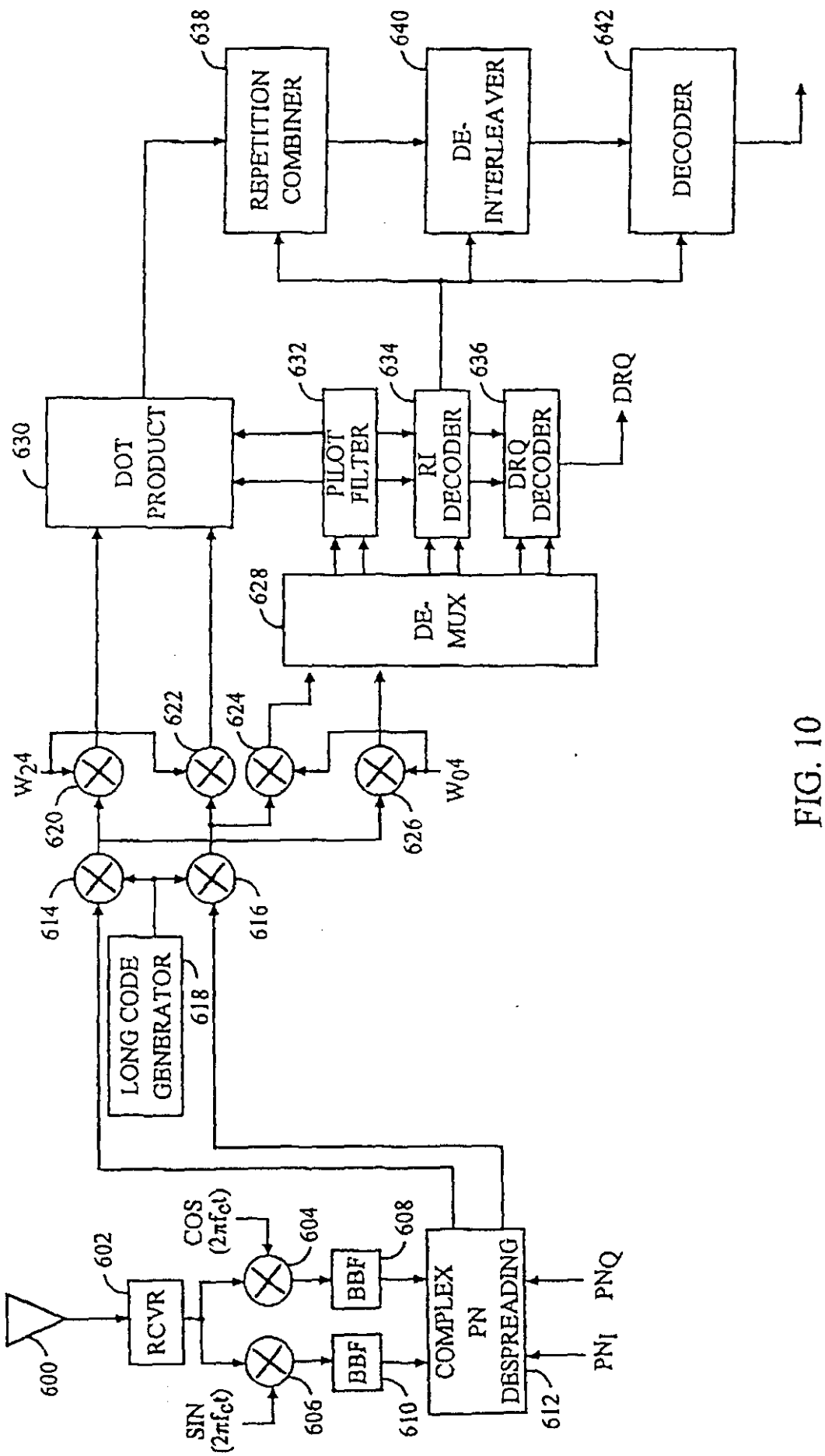
638
REPETITION COMBINER
640
DE-INTERLEAVER
642
DECODER
630
DOT PRODUCT
632
PILOT FILTER
634
RI DECODER
636
DRQ DECODER
DRQ
628
DE-MUX
622
624
W_2^4
620
626
W_0^4
614
616
LONG CODE GENERATOR
618
602
RCVR
600
COS ($2\pi f_{ct}$)
604
606
SIN ($2\pi f_{ct}$)
BBF
608
BBF
610
COMPLEX PN DESPREADING
612
PNQ
PNI

FIG. 10

[19]中华人民共和国国家知识产权局

[51]Int. Cl[7]
H04L 1/00

[12]发明专利申请公开说明书

[21]申请号 99813535.6

[43]公开日 2001年12月12日

[11]公开号 CN 1326628A

[22]申请日 1999.9.22 [21]申请号 99813535.6
[30]优先权
[32]1998.9.22 [33]US [31]09/158,254
[86]国际申请 PCT/US99/21756 1999.9.22
[87]国际公布 WO00/18055 英 2000.3.30
[85]进入国家阶段日期 2001.5.21
[71]申请人 夸尔柯姆股份有限公司
地址 美国加州圣地埃哥
[72]发明人 P·J·布莱克 G·卡米
N·T·辛德忽萨雅那

[74]专利代理机构 上海专利商标事务所
代理人 李家麟

权利要求书5页 说明书17页 附图页数11页

[54]发明名称 用于发送和接收可变速率数据的方法和装置

[57]摘要

一组传送和接收可变速率数据的方法。用线性反馈PN发生器(16)产生的长伪噪声码对数据进行扩展,线性反馈PN发生器(16)的屏蔽是按照可变数据的传送速率以及传送该数据的特定用户由屏蔽选择器(14)来选择的。所以,通过在接收器处识别哪一屏蔽会使接收的波形得到正确去扩展,就可以确定数据的速率。

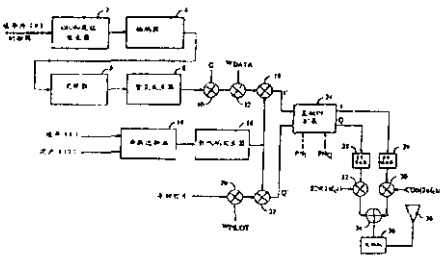

ISSN1008-4274

权　利　要　求　书

1．一种用于发送可变速率数据分组的系统，其特征在于，所述系统包括：

数据编码装置，用于接收所述可变速率数据分组；以及用于对所述可变速率数据分组进行编码；以及

速率指示编码装置，用于接收指示所述可变速率数据分组的速率的速率指示信号；以及用于根据预定的编码格式组对所述速率指示进行编码，其中，根据速率指示信号的值来选择编码格式。

2．如权利要求 1 所述的可变速率发送系统，其特征在于，所述速率指示编码装置从预定的一组沃尔什序列中选择沃尔什序列，并根据所述选择的沃尔什序列对所述速率指示信号进行编码，其中，所述沃尔什序列表示所述可变速率分组的所述速率。

3．如权利要求 1 所述的可变速率发送系统，其特征在于，它还包括：

导频编码装置，用于对一组导频码元进行编码以提供导频信号；以及

多路复用器手段，用于组合所述速率指示信号和所述导频信号。

4．如权利要求 3 所述的可变速率发送系统，其特征在于，它还包括：

速率请求编码手段，用于接收速率请求消息和对所述消息进行编码；以及用于把所述经编码的速率请求消息提供给所述多路复用器；以及

其中，所述多路复用器使所述速率请求消息与所述经编码的导频码元和所述速率指示消息组合起来。

5．如权利要求 1 所述的可变速率发送系统，其特征在于，它还包括：

第一正交扩展装置，用于接收所述经编码的可变速率数据分组；以及用于根据第一正交覆盖格式来覆盖所述可变速率分组；以及

第二正交扩展装置，用于接收所述速率指示信号；以及用于根据第二正交覆盖格式来覆盖所述速率指示。

6．如权利要求 5 所述的可变速率发送系统，其特征在于，它还包括：

第一扰频装置，用于接收所述正交扩展可变速率数据分组；以及用于根据长代码伪噪声序列对所述正交扩展可变速率数据分组进行扰频；以及

第二扰频装置，用于接收所述正交扩展速率指示信号；以及用于根据所述

长代码伪噪声序列对所述正交扩展速率指示信号进行扰频。

7．如权利要求 6 所述的可变速率发送系统，其特征在于，它还包括：

复数 PN 扩展装置，用于接收所述 PN 扰频的可变速率数据分组和所述 PN 扰频的速率指示信号；以及用于根据第一 PN 序列和第二 PN 序列对所述 PN 扰频的可变速率数据分组和所述 PN 扰频的速率指示信号执行复数 PN 扩展。

8．一种用于发送可变速率数据分组的方法，其特征在于，所述方法包括下列步骤：

接收所述可变速率数据分组；以及对所述可变速率数据分组进行编码；以及

接收速率指示信号，所述速率指示信号表示所述可变速率分组的速率；以及

根据预定的一组编码格式对所述速率指示进行编码，其中，所述编码格式是根据所述速率指示信号的值来选择的。

9．如权利要求 8 所述的方法，其特征在于，速率指示编码的所述步骤包括下列步骤：

根据所述可变速率数据分组的速率从预定的一组沃尔什序列中选择沃尔什序列；以及

根据所述选择的沃尔什序列对所述速率指示信号进行编码。

10．如权利要求 8 所述的方法，其特征在于，它还包括下列步骤：

对导频码元组进行编码以提供导频信号；以及

组合所述速率指示信号和所述导频信号。

11．如权利要求 10 所述的方法，其特征在于，它还包括下列步骤：

接收速率请求消息和对所述消息进行编码；以及

把所述经编码的速率请求消息输出到所述多路复用器；

其中，所述多路复用器使所述速率请求消息与所述经编码的导频码元和所述速率指示消息组合起来。

12．如权利要求 8 所述的方法，其特征在于，它还包括下列步骤：

接收所述经编码的可变速率数据分组；

根据第一正交覆盖格式，覆盖所述可变速率分组；

接收所述速率指示信号；以及

根据第二正交覆盖格式，覆盖所述速率指示。

13．如权利要求 12 所述的方法，其特征在于，它还包括下列步骤：

接收所述正交扩展可变速率数据分组；

根据长代码伪噪声序列，对所述正交扩展可变速率数据分组进行扰频；以及

接收所述正交扩展速率指示信号；以及

根据所述长代码伪噪声序列，对所述正交扩展速率指示信号进行扰频。

14．如权利要求 13 所述的方法，其特征在于，它还包括下列步骤：

接收所述 PN 扰频的可变速率数据分组和所述 PN 扰频的速率指示信号；

根据第一 PN 序列和第二 PN 序列，对所述 PN 扰频的可变速率数据分组和所述 PN 扰频的速率指示信号执行复数 PN 扩展。

15．一种用于接收信号的系统，所述信号包括可变速率数据分组和指示可变速率数据分组的速率的速率指示消息，其特征在于，所述系统包括：

第一解调装置，用于根据数据子信道解调格式，对所述接收到的信号进行解调；

第二解调装置，用于根据控制子信道解调格式，对所述接收到的信号进行解调，以提供经解调的控制子信道信号；以及

解码装置，用于从所述经解调的控制子信道信号取得所述速率指示消息。

16．如权利要求 15 所述的系统，其特征在于，所述控制子信道信号包括导频信号和速率指示信号。

17．如权利要求 16 所述的系统，其特征在于，控制子信道信号进一步包括速率请求信号。

18．如权利要求 15 所述的系统，其特征在于，它还包括：

速率指示解码装置，用于根据多个解码格式，对所述速率指示信号进行解码；以及用于根据正确地对所述速率指示信号进行解码的解码格式，确定所述速率指示信号中所指示的速率。

19．如权利要求 18 所述的系统，其特征在于，所述多个解码格式包括多个正交沃尔什解码格式。

20. 如权利要求 18 所述的系统，其特征在于，所述速率指示解码装置包括一组相关器，其中，每个所述相关器执行相应于不同速率假设的相关操作。

21. 如权利要求 18 所述的系统，其特征在于，所述速率指示解码手段包括匹配滤波器组，其中，每个所述匹配滤波器执行相应于不同速率假设的相关操作。

22. 一种用于接收信号的方法，所述信号包括可变速率数据分组和指示可变速率数据分组的速率的速率指示消息，其特征在于，所述方法包括下列步骤：

根据数据子信道解调格式，对所述接收到的信号进行解调；

根据控制子信道解调格式，对所述接收到的信号进行解调，以提供经解调的控制子信道信号；以及

从所述经解调的控制子信道信号，取得所述速率指示消息。

23. 如权利要求 22 所述的方法，其特征在于，所述控制子信道信号包括导频信号和速率指示信号。

24. 如权利要求 23 所述的系统，其特征在于，控制子信道信号进一步包括速率请求信号。

25. 如权利要求 22 所述的方法，其特征在于，它还包括下列步骤：

根据多个解码格式，对所述速率指示信号进行解码；以及

根据正确地对所述速率指示信号进行解码的解码格式，选择所述速率指示信号中所指示的速率。

26. 如权利要求 25 所述的系统，其特征在于，所述多个解码格式包括多个正交沃尔什解码格式。

27. 如权利要求 25 所述的系统，其特征在于，所述速率指示解码执行相应于不同速率假设的相关操作。

28. 如权利要求 25 所述的系统，其特征在于，所述速率指示解码包括执行多个匹配滤波操作，其中，每个所述匹配滤波操作执行相应于不同速率假设的相关操作。

29. 一种用于发送可变速率数据分组的系统，其特征在于，所述系统包括：

屏蔽选择装置，用于根据所述可变速率分组的速率选择长代码屏蔽；以及

扩展装置，用于根据所述选择的长代码屏蔽来扩展所述可变速率分组。

30．一种用于产生可变速率数据分组的系统，其特征在于，所述系统包括：

数据编码装置，用于对所述可变速率数据分组进行编码；

多路复用器装置，用于接收所述经编码的可变速率数据分组；以及用于接收所述可变速率数据分组的速率的前置码指示，其中，所述前置码是从彼此正交的并且持续期变化的一组前置码中选择出来的。

说　　明　　书

用于发送和接收可变速率数据的方法和装置

发明背景

发明领域

本发明涉及通信。尤其，本发明涉及一种用于发送和接收可变速率数据分组的方法和装置，其中，是用信号来指示这些分组的数据速率。

现有技术的描述

码分多址（CDMA）调制技术的应用是数种技术中的一种，它用于促进存在大量系统用户的通信。虽然众知其它技术，诸如时分多址（TDMA）、频分多址（FDMA）和诸如幅度压扩单边带（ACSSB）之类的 AM 调制方案，但是 CDMA 比这些其它技术具有显著的优点。在题为“使用卫星或地面中继器的扩频多址通信系统”的美国专利第 4,901,307 号中揭示了在多址通信系统中的 CDMA 技术的应用，该专利已转让给本发明的受让人，并在此引用作为参考。在题为“在 CDMA 蜂窝电话系统中用于产生信号波形的系统和方法”的美国专利第 5,103,459 号中进一步揭示了在多址通信系统中的 CDMA 技术的应用，该专利已转让给本发明的受让人，并在此引用作为参考。

在上述美国专利第 5,103,459 号（‘459 专利）中，描述了应用正交沃尔什代码来对不同的付费用户站提供信道化。这允许基站在基站的覆盖范围中把许多分立的信道发送给多个用户。在‘459 专利中，所发送的正交沃尔什信道中的一个信道是导频信道，该信道允许在其它正交沃尔什信道上发送的话务信道的相干调制。在 1996 年 4 月 9 日提出的，题为“在 CDMA 无线通信系统中的降低峰到平均发射功率高数据速率”的美国专利第 08/856,428 号中揭示了能够相干调制的从移动站发送 CDMA 信号的方法，该专利已转让给本发明的受让人，并在此引用作为参考。在美国专利申请第 08/856,428 号中，移动站发送多个不同的信道，其中通过使用短沃尔什序列来区别每个信道。此外，在美国专利申请第 08/856,428 号中，一种复数伪噪声（PN）扩展的方法，它降低在 QPSK 调制信号传输中的峰到平均比。

CDMA 系统经常使用可变速率声码器对数据进行编码，以致可以从一个数

据帧到另一个数据帧改变数据速率。在题为“可变速率声码器”的美国专利第 5,414,796 号中揭示了可变速率声码器的示例实施例，该专利已转让给本发明的受让人，并在此引用作为参考。当没有有用的语音要发送时省去不必要的发送，使可变速率通信信道的应用降低了相互干扰。

相似地，希望在 CDMA 无线通信系统中提供数字数据的可变速率传输。当有大量数字信息待发送和当使延迟最小是很重要时，则应该以高传输速率来发送数据。然而，当待发送的数据较少或当延迟最小不是很重要时，希望降低无线通信系统中的数字数据传输速率，因为速率较低的传输比最大传输速率可以得到增加距离、延长电池寿命和降低对其它用户的干扰等结果。

在题为“在通信接收机中用于确定所发送的可变速率数据的方法和装置”的未定美国专利第 5,566,206 号中揭示了接收机确定所接收到的数据帧的速率的一种技术，该专利已转让给本发明的受让人，并在此引用作为参考。在 1993 年 9 月 24 日提出的，题为“用于码分多址系统应用的多速率串联维特比解码器”的美国专利第 08/126,477 号中揭示了另一种技术，该专利已转让给本发明的受让人，并在此引用作为参考。根据这些技术，在每个可能的速率处对每一个接收到的数据帧进行解码。把描述经解码的码元（在每个速率处对每个帧进行解码）的差错量度提供给处理器。差错量度可以包括循环冗余校验（CRC）结果、Yamamoto 质量量度和码元差错率。在通信系统中，这些差错量度是众所周知的。处理器分析差错量度并确定发送输入码元的概率最大的速率。

发明概要

本发明提供一种新颖的和改进的装置和方法，用于发送和接收可变速率数据。在本发明的第一实施例中，使用通过线性反馈 PN 发生器产生的长伪噪声代码来扩展数据，根据可变数据的传输速率和发送数据的特定用户来选择其屏蔽。因此，通过在接收机处识别哪个屏蔽将允许对所接收到的波形进行去扩展而确定数据的速率。在本发明的第二实施例中，把来自预定前置码组的前置码穿插到输出导频信号中以提供速率指示信息。在第三实施例中，根据正交函数组（它是数据分组的速率指示的一部分）对速率指示信号进行编码。

附图简述

从下面结合附图的详细描述中，对本发明的特性、目的和优点将更为明了，在所有的附图中，用相同的标记作相应的识别，其中：

图 1 是本发明的第一实施例的传输系统的方框图；

图 2 是示例 PN 发生器的方框图；

图 3 是示出用于长代码屏蔽的位的图；

图 4 是示出第一接收机系统的方框图，所述第一接收机系统用于接收借助于本发明的第一实施例发送的可变速率数据；

图 5 是示出第二接收机系统的方框图，所述第二接收机系统用于接收借助于本发明的第一实施例发送的可变速率数据；

图 6 是示出本发明的第二实施例的发射机系统的方框图；

图 7A－7H 是示出用于本发明的第二实施例中的前置码格式建议组的图；

图 8 是示出本发明的第二实施例的接收机系统的方框图；

图 9 是本发明的远程站的方框图，示出本发明的第三实施例的发射机系统；以及

图 10 是示出本发明的第三实施例的接收机系统的方框图。

较佳实施例的详述

参考图纸，图 1 示出方框图形式的本发明的发送装置。把待发送的数据分组提供给循环冗余校验（CRC）和尾位产生器 2。在数据分组中的数据位数确定发送的有效速率 R。根据本技术领域中众知的方法，CRC 和尾位产生器 2 产生诸如奇偶位之类的 CRC 位的组。把 CRC 位与尾位的组一起附加到数据分组。

把附加了 CRC 和尾位的数据分组提供给前向差错校正编码器 4。编码器 4 可以是任何形式的前向差错校正编码器，诸如卷积编码器和里德－索罗门编码器或其它已知前向差错校正编码器。在示例实施例中，编码器 4 是加速按键编码器，在本技术领域中众知它的设计，并在题为“相应于迭代解码方法的具有至少两个并行的系统卷积编码的差错校正编码方法，解码模块和解码器”的美国专利第 5,446,747 号中揭示了技术，在此引用该专利作为参考。

把经编码的分组提供给交错器 6，它对在分组中的经编码的码元再排序，以提供对脉冲串差错提供附加保护的临时分集。然后把再排序的分组提供给

重复产生器 8，重复产生器 8 把经交错的码元的冗余形式提供给分组，以致输出码元数固定的分组而不管分组的数据速率 R。把来自重复产生器 8 的分组提供给增益单元 10，它根据分组的速率 R 和为了提供导频信道和数据信道之间的正确功率比而调节分组的增益。

把来自增益单元 10 的分组提供给子信道扩展单元 12。子信道扩展单元 12 使用短扩展序列（W_{dnts}）扩展分组，使用所述短扩展序列以允许接收机把导频信道从数据信道分开。在示例实施例中，所使用的短扩展序列是短正交沃尔什序列。在上述美国专利申请第 08/856,428 号中描述使用短正交沃尔什序列来提供反向链路上的信道化。把来自子信道扩展单元 12 的扩展分组提供给扰频单元 18。扰频单元 18 根据通过长代码产生器 16 产生的伪噪声（PN）序列对分组进行扰频。

转到图 2，图中示出 PN 发生器 16 的示例实施例。使用从 FIR 滤波器 50 得到的伪噪声（PN）序列对分组进行覆盖，所述 FIR 滤波器 50 是由与总和单元和分接头相关联的线性移位寄存器组成的。在示例实施例中，FIR 滤波器 50 是 42 个分接头的 FIR 滤波器，该滤波器用于在题为“双模式宽带扩展频谱蜂窝系统的移动站－基站兼容性标准”的电信工业协会标准 TIA/EIA/IS－95－A 中的反向链路发送的扰频。

把来自 FIR 滤波器 50 的输出提供给与门组 52。把每个 FIR 滤波器 50 的输出同 42－位长代码屏蔽进行“与”。把“与”操作的结果提供给模 2 加法手段 54，模 2 加法手段 54 执行总和操作以提供长代码序列作为串行输出。以这种方式产生的长代码具有在本技术领域中众知的重要的自校正特征。在蜂窝 CDMA 系统中使用这种形式的长代码对移动站与其它移动站进行区分。当使用两个有区别的长代码屏蔽时，所产生的两个长代码序列是不相关的，或至少具有有限的相关。为了对速率信息进行编码，本发明采用所产生的长代码的这个特性的优点。

如在图 3 中所示，在本发明中，示例 42－位长代码屏蔽包括 n 位，它们识别发送速率，而使用（42－n）来识别用户。例如，如果有两种可能的发送速率，则单个位（n＝1）已足以识别发送速率。如果有 3 或 4 种可能的发送速率，则需要 2 位（n＝2）来规定发送速率，依此类推。在图 3 中，识别发送

速率的位是最高有效位（MSB），然而，可以等同地应用任何位，甚至识别速率的位可以不连续。

回到图 1，把有关信息的速率的信息提供给屏蔽选择器 14，屏蔽选择器 14 根据速率信息 R 和发送远程站的识别符提供屏蔽。可以使用诸如 RAM 或 ROM 器件之类的存储器器件来实施屏蔽选择器 14，它存储根据待发送的分组速率得到的屏蔽代码。把所选择的屏蔽提供给长代码产生器 16，长代码产生器 16 把所产生的长代码提供给扰频单元 18 和 22。

在示例实施例中，远程站发送数据信道和允许对它的发送信号进行相关的导频信道两者。本发明不限于连同导频信道一起发送数据信道的系统，也不限于反向链路发送。可把本发明等同地应用于任何可变速率发送系统，其中，接收机事前不知道发送速率，而且使用伪噪声序列对数据进行扰频。

把导频信号位的组提供给子信道扩展单元 12。导频信号没有携带信息，并且在示例实施例中是简单的零的字符串。通过短沃尔什序列 W_{pilot}（在示例实施例中它正交于 W_{data}）扩展导频位，并用于从数据信道区别导频信道。把子信道扩展分组提供给扰频单元 22，如上所述，扰频单元 22 根据长代码产生器 16 产生的长代码对分组进行扰频。

把来自扰频单元 18 和 22 的 PN 经扰频的分组提供给复数 IQ 扩展手段 24，如在上述美国专利申请第 08/856,428 号所述，复数 IQ 扩展手段 24 执行复数扩展操作。通过输入伪噪声序列 PN_I 和 PN_Q 对输出 I 和 Q 进行复数扩展，以提供根据下列等式的输出 I 和 Q：

$$I = I'PN_I - Q'PN_Q \quad (1)$$

$$Q = I'PN_Q - Q'PN_I \quad (2)$$

把来自复数 IQ 扩展手段 24 的输出提供给基带滤波器（BBF）26 和 28，它们对所产生波形提供合适的滤波。把经滤波的波形提供给上变频单元 30 和 32，并根据 QPSK 调制格式上变频到载波频率（f_c）。在总和单元 34 中把两个经上变频的波形相加，把它的输出提供给发射机（TMTR）36，它对信号放大和滤波，并把信号提供给用于发送的天线 38。

图 4 示出用于接收根据图 1 发送的波形的第一接收机系统。在天线 100 处接收信号并把信号提供给接收机（RCVR）102，它对所接收到的信号进行放

大和滤波。然后把所接收到的信号提供给下变频器 104 和 106，它根据本技术领域中众知的 QPSK 下变频方法对所接收到的信号进行下变频。把经下变频的信号的 I 和 Q 分量提供给基带滤波器（BBF）108 和 110，它们对信号进行滤波，并把基带信号提供给复数 PN 去扩展手段 112。在上述美国专利申请第 08/856,428 号和除去上述等式 1 和 2 描述的 PN 扩展中详细描述复数 PN 去扩展手段 112 的实施。

还有，示例实施例示出一种用于在两种可能速率之间进行区别的方法。熟悉本技术领域的人员会理解，通过增加解调器/解码器单元 114 的数目可以把所示的接收机结构扩展到任意数的潜在速率。在示例实施例中，把复数经扩展的分组数据提供给解调器/解码器单元 114a 和 114b。熟悉本技术领域的人员会理解，也可以用运行于较高速率的一个硬件单元来进行解调。此外，接收机可以对使用相应于不同速率假设的长代码屏蔽的导频信号进行去扰频，并估计使用每个假设得到的结果能量。

解调器/解码器元件 114a 使用与第一数据速率假设相关联的长代码屏蔽对数据进行解调，而解调器/解码器元件 114b 使用与第二数据速率假设相关联的长代码屏蔽对数据进行解调。如上所述，相应于两个数据速率假设的长 PN 代码将不相关。使用正确长代码屏蔽（相应于正确速率假设）的数据的解调和解码将正确地解调和解码，而使用不正确长代码屏蔽（相应于不正确速率假设）的数据的解调和解码将不正确地解调和解码。CRC 校验和选择器 140 将检测到相应于数据的正确假设的正确解调和解码。CRC 校验和选择器单元 140 将从经解码的数据估计产生一组 CRC 位，并将把这些与经解码的 CRC 估计进行比较。如果所产生的 CRC 位与经解码的 CRC 估计匹配，则将把在该速率处的数据提供给用户。转到解调器/解码器 114 的细则，把复数 PN 扩展分组提供给去扰频单元 118 和 120。根据通过长代码产生器 116 产生的长 PN 代码对分组进行去扰频，所述长代码产生器 116 根据相应于所接收的移动站的长代码屏蔽和来自一组可能速率的一个速率而产生长代码，如相应于发送过程所述。

把来自去扰频单元 118 和 120 的经去扰频的数据分组提供给子信道去扩展单元 122、124、126 和 128，它们从所接收到的数据流除去沃尔什子信道覆盖。

子信道去扩展单元 122 和 124 根据数据子信道沃尔什序列（W_{data}）从经去扰频的数据除去数据子信道覆盖。子信道去扩展单元 126 和 128 根据导频信道沃尔什序列（W_{pilot}）从经去扰频的数据除去数据子信道覆盖。

把来自子信道去扩展单元 126 和 128 的输出提供给导频滤波器 132，为了降低在所接收到的导频信号上的噪声影响，导频滤波器 132 在信号上执行移动平均滤波操作。把来自导频滤波器 132 的 I 和 Q 分量提供给点积电路 130，点积电路 130 执行 QPSK 数据信道的相干解调。点积单元的设计是本技术领域中众所周知的，在题为“导频载波点积电路”的美国专利第 5,506,865 号中揭示该技术，该专利已转让给本发明的受让人，并在此引用作为参考。

把点积单元 130 的经解调的数据信号输出提供给重复组合器 134。重复组合器 134 根据通过解调器/解码器元件 114 测试的速率假设对在分组中的重复码元进行组合。去交错器 136 根据与速率有关的去交错格式对码元再排序，并提供经组合的码元。把经再排序的码元提供给对码元进行解码的解码器 138。在示例实施例中，解码器 138 是加速按键解码器，在本技术领域中众知它的实施，并在美国专利第 5,446,747 中详述。可把本发明等同地应用于其它解码器结构，诸如格式码（trellis）解码器和块码解码器。

把来自解调器/解码器 138a 和 138b 的经解码的分组提供给 CRC 校验和选择器 140。在示例实施例中，校验 CRC 位，并输出通过 CRC 校验的数据，作为在正确速率处经解调和经解码的数据。本发明还期望采用分组选择的其它方法，诸如那些包括来自解码器 138 的积累量度的使用，所接收到的导频能量接着通过不同长代码屏蔽去扩展的，或使用有赖于解码器 138 进行的码元校正数的码元差错率（SER）。

图 5 示出第二接收机系统，用于接收根据图 1 发送的波形。在天线 200 处接收数据并提供给接收机（RCVR）202，它对所接收到的信号进行滤波和放大。然后把所接收到的信号提供给下变频器 204 和 206，它根据本技术领域中众知的 QPSK 下变频方法对所接收到的信号进行下变频。把经下变频的信号的 I 和 Q 分量提供给基带滤波器（BBF）208 和 210，它们对信号进行滤波，并把基带信号提供给复数 PN 去扩展手段 212，它根据伪噪声序列 PN_I 和 PN_Q 对信号去扩展。在上述美国专利申请第 08/856,428 号和除去上述等式 1 和 2

描述的 PN 扩展中详细描述复数 PN 去扩展手段 212 的实施。

还有，示例实施例示出在两个可能速率之间进行区分的方法。熟悉本技术领域的人员会理解，通过增加解调器单元 214 的数目可以把所示的接收机结构扩展到任意数的潜在速率。在示例实施例中，把复数经扩展的分组数据提供给解调器 214a 和 214b。

解调器 214a 使用与第一数据速率假设相关联的长代码屏蔽对数据进行解调，而解调器 214b 使用与第二数据速率假设相关联的长代码屏蔽对数据进行解调。如上所述，相应于两个数据速率假设的长 PN 代码将不相关。使用正确长代码屏蔽（相应于正确速率假设）的数据的解调将正确地解调产生高能量经解调的信号，而使用不正确长代码屏蔽（相应于不正确速率假设）的数据的解调将不正确地解调产生低能量噪声。CRC 校验和选择器 140 将检测到相应于数据的正确假设的正确解调和解码。选择器 236 将检测相应于正确速率假设的正确解调，它将比较两个经解调的数据流的能量。

选择器单元 236 将把正确解调的数据分组提供给重复组合器 238，重复组合器 238 根据所接收到的数据的检测速率组合数据。把经组合的码元提供给去交错器 240，它根据基于所确定的速率选择的去交错格式使码元再排序。把经再排序的码元提供给解码器 242，解码器 242 根据预定差错校正格式对码元进行解码。在示例实施例中，解码器 242 是诸如格式码（trellis）解码器和块码解码器之类的加速按键解码器。然后把经解码的数据分组输出给用户。

转到解调器 214 的细则，把复数 PN 扩展分组提供给去扰频单元 218 和 220。根据通过长代码产生器 216 产生的长 PN 代码对分组进行去扰频，所述长代码产生器 216 根据相应于来自一组可能速率的一个速率的长代码屏蔽而产生长代码，如相应于发送过程所述。

把来自去扰频单元 218 和 220 的经去扰频的数据分组提供给子信道去扩展单元 222、224、226 和 228，它们从所接收到的数据流除去沃尔什子信道覆盖。子信道去扩展单元 222 和 224 根据数据子信道沃尔什序列（W_{data}）从经去扰频的数据除去数据子信道覆盖。子信道去扩展单元 226 和 228 根据导频信道沃尔什序列（W_{pilot}）从经去扰频的数据除去数据子信道覆盖。

把来自子信道去扩展单元 226 和 228 的输出提供给导频滤波器 232，为了

降低在所接收到的导频信号上的噪声影响，导频滤波器 232 在信号上执行移动平均滤波操作。把来自导频滤波器 232 的 I 和 Q 分量提供给点积电路 230，点积电路 230 执行 QPSK 数据信道的相干解调。点积单元的设计是本技术领域中众所周知的，在题为“导频载波点积电路”的美国专利第 5,506,865 号中揭示该技术，该专利已转让给本发明的受让人，并在此引用作为参考。

把点积单元 230 的经解调的数据信号输出提供给能量计算器 234 和给选择器 236。能量计算器 234 计算经解调的分组的能量并把能量值提供给选择器 236。选择器 236 选择具有最大能量量的经解调的分组。把所选择的分组提供给重复组合器 238，重复组合器 238 组合冗余码元能量并把经组合的能量提供给去交错器 240。去交错器 240 对经组合的码元能量再排序，并把它们提供给解码器 242。解码器 242 对数据进行解码并把它提供给用户。

图 6 示出本发明的第二示例实施例的发送系统。在本发明的第二实施例中，发送带有前置码的每个数据分组，所述前置码指示所发送的分组的数据速率。把数据分组提供给 CRC 和尾位产生器 300。CRC 和尾位产生器 300 产生一组冗余校验位，并把这些校验位和一组尾位一起附加到分组。

把通过 CRC 和尾位产生器 300 输出的分组提供给编码器 302，它在分组上执行前向差错编码。在示例实施例中，编码器 302 是加速按键编码器。把经编码的码元提供给交错器 304，交错器 304 根据预定的交错格式使码元再排序。把经再排序的码元提供给重复产生器 306，重复产生器 306 产生一组冗余码元，以不管分组的数据速率而输出固定码元数的分组。

把来自重复产生器 306 的分组提供给增益调节手段 308，增益调节手段 308 根据分组的数据速率和正确发送反向链路信号所要求的 E_b/N_0 来调节分组的增益。把经增益调节的分组提供给多路复用器 312。在示例实施例中，多路复用器 312 执行简单的交换操作，该操作通过重写帧的第一部分而把速率指示前置码穿插到数据分组中。可以借助于在接收机处的前向校正解码器恢复重写数据。在另一个实施例中，可以调节分组长度，以致没有数据需要通过前置码来重写。

在本发明的当前实施例中，速率指示前置码组的长度根据待发送的分组的数据速率而改变。在示例实施例中，分组的数据速率越低，包括在分组中的

前置码越长。在示例实施例中，可能速率组通过 2 的因子而彼此不同，例如，9.6 Kbps、19.2 Kbps、38.4 Kbps 和 76.8 Kbps。在示例实施例中，前置码的长度变化与分组的数据速率成反比，这样，由于待发送的分组的可变持续期作为数据速率的函数，通过前置码重写的分组中的数据的比例保持常数。

转到图 7，图中示出四个前置码示例组。在示例实施例中，图 7A 示出对于在速率组中的最大可能速率（即，76.8 Kbps）的所建议的前置码。图 7B 示出对于在速率组中的第二最大可能速率（即，36.4 Kbps）的所建议的前置码。图 7C 示出对于在速率组中的第三最大可能速率（即，19.2 Kbps）的所建议的前置码。图 7D 示出对于在速率组中的最小可能速率（即，9.6 Kbps）的所建议的前置码。

要观察的有关所建议前置码结构的重要特征是前置码序列在所选择的时间周期上是正交的。例如，在图 7A 中示出的前置码序列在它的持续期（0 到 4T）的周期上对于在图 7B、7C 和 7D 中示出的前置码序列是正交的。相似地，在图 7B 中示出的前置码序列在它的持续期（0 到 8T）的周期上对于在图 7C 和 7D 中示出的前置码序列是正交的。最后，在图 7C 中示出的前置码序列在它的持续期（0 到 16T）的周期上对于在图 7D 中示出的前置码序列是正交的。因为两个正交序列之间的相关是零，通过使前置码的检测更为正确而在接收机处实现了前置码波形正交性的优点。因此，通过使前置码序列经过一个诸如匹配滤波器之类的相关器，将对所有前置码速率假设产生零能量，除了正确的前置码速率假设之外。图 7E－7H 示出另一组所建议的前置码波形，它们与在 7A－7D 中所示出的那些表明相同的正交特征。

把数据分组提供给子信道扩展单元 310，它根据沃尔什序列 W_{data} 覆盖分组。此外，子信道扩展单元 311 对速率指示信号进行沃尔什覆盖。多路复用器 312 组合数据信号和前置码信号。在另一个实施例中，可以在执行沃尔什覆盖操作之前使数据分组与前置码组合。然后把经组合的经沃尔什覆盖的分组提供给扰频手段 314，它根据通过长代码产生器和屏蔽 316 提供的长代码序列对分组进行扰频。把长代码唯一地分配给远程站，用于区别同时与给定基站进行通信的不同远程站的发送。

在导频信号的调制中，把预定导频码元组提供给沃尔什覆盖手段 318。在

示例实施例中，导频码元序列是全零的字符串。沃尔什覆盖手段 318 根据沃尔什序列 W_{pilot} 覆盖导频码元。把经沃尔什覆盖的导频码元提供给扩展手段 320，它根据来自长代码产生器和屏蔽 316 的长 PN 序列对经沃尔什覆盖的导频码元进行扰频。把从扰频器 314 和 320 的输出与伪噪声序列 PN_I 和 PN_Q 一起输入到复数 PN 扩展单元 322。复数 PN 扩展单元 322 根据上述等式 1 和 2 在输入信号上执行复数 PN 扩展。

把来自复数 PN 扩展单元 322 的 I 和 Q 信道输出提供给基带滤波器（BBF）324 和 326。基带滤波器（BBF）324 和 326 对基带信号进行滤波，并把经滤波的信号提供给上变频器 328 和 330。上变频器 328 和 330 根据 QPSK 调制格式对信号进行上变频，所产生的经上变频的信号彼此相位相差 90 度。在总和单元 332 中把经上变频的信号相加，并提供给发射机（TMTR）334，它对信号放大和滤波，并通过天线 336 发送。

图 8 示出第二实施例的接收机系统。在天线 400 处接收信号并把信号提供给接收机（RCVR）402，它对所接收到的信号进行放大和滤波。然后把所接收到的信号提供给下变频器 404 和 406，它根据本技术领域中众知的 QPSK 下变频方法对所接收到的信号进行下变频。把经下变频的信号的 I 和 Q 分量提供给基带滤波器（BBF）408 和 410，它们对信号进行滤波，并把基带信号提供给复数 PN 去扩展单元 412。在上述美国专利申请第 08/856,428 号和除去上述等式 1 和 2 描述的复数 PN 扩展中详细描述复数 PN 去扩展单元 412 的实施。

把经去扩展的 I 和 Q 信号提供给去扰频单元 416 和 418。去扰频单元 416 和 418 根据长代码和屏蔽产生器 414 提供的长代码对信号进行去扰频。去扰频单元 416 和 418 把经去扰频的 I 和 Q 信号提供给子信道去扩展单元 426、428、430 和 432，它们从所接收到的信号除去沃尔什子信道覆盖。子信道去扩展单元 426 和 428 根据数据子信道沃尔什序列（W_{data}）从经去扰频的数据除去数据子信道覆盖。子信道去扩展单元 430 和 432 根据导频信道沃尔什序列（W_{pilot}）从经去扰频的数据除去导频子信道覆盖。

把来自子信道去扩展单元 430 和 432 的输出提供给导频滤波器 434，为了降低在所接收到的导频信号上的噪声影响，导频滤波器 434 在信号上执行移动平均滤波操作。把来自导频滤波器 434 的 I 和 Q 分量提供给点积电路 436，

点积电路 436 执行 QPSK 数据信道的相干解调。点积单元的设计是本技术领域中众所周知的，在题为“导频载波点积电路”的美国专利第 5,506,865 号中揭示该技术，该专利已转让给本发明的受让人，并在此引用作为参考。

把点积单元 436 的经解调的数据信号输出提供给去复用器（De-Mux）420。起初，去复用器 420 把数据输出到前置码检测器 424。前置码检测器 424 确定由经去扩展的前置码指示的速率。前置码检测器的许多实施都是可能的。例如，可以使用一组匹配滤波器或其它相关器来实施前置码检测器 424。在寻找到对于预定前置码组中之一具有足够相关能量的前置码时，就宣布已经成功地检测到速率。在另一个实施例中，可以非相干地检测前置码，在这种情况下，可以从子信道去扩展单元 426 和 428 通过去复用器 420 直接把经去扩展的数据提供给前置码检测器。

在成功地检测到候选前置码中之一时，前置码检测器 424 把指示所检测到的速率的信号发送到重复组合器 438、去交错器 440 和解码器 442，它们根据该信息执行它们的操作。此外，在检测到前置码消息的结束时，前置码检测器把指示检测到前置码结束的信号发送到去复用器 420，根据该信号，去复用器 420 开始把经去扩展的数据输出到重复组合器 438。

重复组合器 438 根据所接收到的分组的检测到的速率组合在分组中的经重复的码元能量。把经组合的码元能量提供给去交错器 440，它根据来自前置码检测器 424 的速率信号选择的去交错格式对码元能量再排序。在示例实施例中，解码器 442 是加速按键编码器，它的实施在本技术领域中是众所周知的，并在美国专利第 5,446,747 号中详细描述。可把本发明等同地应用于其它解码器结构，诸如格式码（trellis）解码器和块码解码器。解码器 442 把经解码的数据估计输出给用户。

图 9 示出用于发送可变速率数据的本发明的较佳实施例。在较佳实施例中，在不同数据速率处的分组包括不同的信息位数，但是跨越相同时间的持续期（即，2 帧＝32 时隙＝53 毫秒）。数据发送系统再次发送与数据信道不同的控制信道。在本发明的第三实施例中，控制信道包括三类在时间上多路复用在一起的信息。在控制信道上提供的第一类信息是导频信号。第二类是速率指示消息，所述消息指示正在同控制信道消息一起发送的数据分组的速率。

第三类是速率请求消息，所述消息是远程站请求的，要求服务基站提供在该速率处的数据。

在较佳实施例中，速率请求信息提供一种速率的指示，在该速率处，远程站要求对它下载数据，还有远程站希望执行数据发送的基站或基站扇区也要求对它下载数据。在较佳实施例中，预定基站组的哪个基站或扇区的指示是基于只能由所搜索到的向远程站发送的基站正确地解码的扩展函数的。

在识别沃尔什函数中，上标识别沃尔什函数的级，而下标识别该级的沃尔什函数的指数。下面表 1－3 提供在当前说明中使用的沃尔什函数。

表 1

W_0^2	00
W_1^2	00

表 2

W_0^4	0000
W_1^4	0101
W_2^4	0011
W_3^4	0110

表 3

W_0^8	0000 0000
W_1^8	0101 0101
W_2^8	0011 0011
W_3^8	0110 0110
W_4^8	0000 1111
W_5^8	0101 1010
W_6^8	0011 1100
W_7^8	0110 1001

如在上述两个实施例中，导频信道码元是简单的预定序列。在示例实施例

中，导频码元是提供给多路复用器(MUX) 500 的全零的字符串。在示例实施例中，速率指示信号是一个双正交波形。因此，到沃尔什覆盖单元 502 的输入是二进制值，该值的交变将得到所产生的波形的形式。把来自沃尔什覆盖单元 502 的码元提供给沃尔什覆盖单元 504，沃尔什覆盖单元 504 提供数据的第二沃尔什覆盖，其中，所使用的沃尔什覆盖的指数提供速率指示值的第二部分。在示例实施例中，第二沃尔什覆盖可以取 8 种不同的形式，这些形式和输入组合允许多达 16 种不同速率的规格。把来自沃尔什覆盖单元 504 的沃尔什码元提供给多路复用器 500。在示例实施例中，对于跨越反向链路分组的每 32 个连续的时隙（2 帧）把速率指示穿插到导频码元中一次一个时隙。这是在衰减环境中提供时间分集。

转到速率请求消息，示例实施例提供多达 16 个可能的前向链路（从基站到移动站）数据速率规格。把 4一位指数提供到块码编码器 506。在示例实施例中，块码编码器 506 使用（8,4,4）块码把 4一位输入映射到 8 个可能的沃尔什码元的组或它们的反向，其设计和实施是本技术领域中众所周知的。然后把块码经编码的速率请求提供给重复产生器 508，重复产生器 508 为了时间分集的目的提供冗余以防止脉冲串差错。然后把速率请求消息提供给增益调节单元 510，它调节增益以提供速率请求消息的正确接收。把经增益调节的信号提供给沃尔什覆盖单元 512，它把附加的冗余提供到速率请求消息中。

然后把来自沃尔什覆盖单元 512 的经沃尔什覆盖的信息提供给沃尔什覆盖单元 514。沃尔什覆盖单元 514 的目的是指示最佳基站或基站扇区，以从其接收前向链路数据。在示例实施例中，远程站从一组它能够从其接收到数据的基站组测量发送的 C/I。远程站选择能够以最高 C/I 把数据提供给远程站的基站，以把数据下载到远程站。通过使用一个沃尔什序列来指示所选择的基站，只能由所选择的基站对该沃尔什序列正确地进行解调。在远程站有效组（或能够发送到远程站的基站/扇区）中的所有基站和扇区将试图使用所分配的 W_i^8 序列对信号进行解调。然而，只有所选择的基站可以正确地解调请求并发送到远程站。通过多路复用器 500 使经编码的速率请求信息、速率指示和导频数据在时间上多路复用在一起。把经多路复用的控制信号提供给子信道扩展单元 516，它用沃尔什覆盖覆盖所产生的信号，所述沃尔什覆盖正交于通常覆

盖数据子信道的沃尔什覆盖。

在数据子信道上，把可变速率数据分组提供给 CRC 和尾位产生器 518。CRC 和尾位产生器 518 产生一组冗余校验位，并把这些校验位与尾位组一起附加到分组中。

把通过 CRC 和尾位产生器 518 输出的分组提供给编码器 520，编码器 520 在可变速率数据分组上执行前向差错编码。在示例实施例中，编码器 520 是加速按键编码器。然后把经编码的码元提供给交错器 522，它根据预定的交错格式对码元再排序。把经再排序的码元提供给重复产生器 524，重复产生器 524 产生一组冗余码元，以不管分组的数据速率而输出包含固定码元数的分组。

把来自重复产生器 524 的分组提供给增益调节手段 526，增益调节手段 526 根据分组的数据速率和正确发送反向链路信号所要求的 E_b/N_0 来调节分组的增益。把经增益调节的分组提供给子信道扩展单元 528，它用正交于通常覆盖控制分组的沃尔什覆序列的沃尔什序列来覆盖分组。

分别把数据分组和控制分组提供给扰频手段 534 和 532。扰频手段 534 和 532 根据长代码产生器和屏蔽 530 提供的长代码序列对分组进行扰频。把从扰频手段 532 和 534 的输出与伪噪声序列 PN_I 和 PN_Q 一起输入到复数 PN 扩展单元 536。复数 PN 扩展单元 536 根据上述等式 1 和 2 在输入信号上执行复数 PN 扩展。

把来自复数 PN 扩展单元 536 的 I 和 Q 信道输出提供给基带滤波器（BBF）538 和 540。基带滤波器（BBF）538 和 540 对基带信号进行滤波，并把经滤波的信号提供给上变频器 542 和 544。上变频器 542 和 544 根据 QPSK 调制格式对信号进行上变频，其中，所产生的经上变频的信号彼此相位相差 90 度。在总和单元 546 中把经上变频的信号相加，并提供给发射机（TMTR）548，它对信号放大和滤波，并通过双工器 549 提供给天线 550 发送。

此外，远程站 554 包括可变速率接收子系统 552，用于接收来自能够向远程站 554 发送的基站或多个基站的前向链路可变速率数据。通过天线 550 接收前向链路可变速率数据，并通过双工器 549 提供给可变速率接收子系统 552。

图 10 示出用于第三实施例的接收机的示例实施例。在天线 600 处接收信号，并提供给接收机（RCVR）602，接收机 602 对所接收到的信号进行滤波

和放大。然后，把所接收到的信号提供给下变频器 604 和 606，它们根据本技术领域中众知的 QPSK 下变频方法对所接收到的信号进行下变频。把经下变频的信号的 I 和 Q 分量提供给基带滤波器(BBF)608 和 610。基带滤波器(BBF)608 和 610 对信号进行滤波，并把基带信号提供给复数 PN 去扩展单元 612，复数 PN 去扩展单元 612 的实施除去在等式 1 和 2 中所描述的复数 PN 扩展。在上述美国专利申请第 08/856,428 号中详细描述复数 PN 去扩展单元 612 的实施。

把复数 PN 去扩展分组提供给去扰频器 614 和 618。根据长代码产生器 618 产生的长 PN 代码对分组进行去扰频，所述长代码产生器产生长代码序列，如上面相应于前面的实施例所述。

把来自去扰频器 614 和 616 的经去扰频的数据分组提供给子信道去扩展单元 620，622、624 和 626，它们从所接收到的数据流除去沃尔什子信道覆盖。子信道去扩展单元 620 和 622 根据数据子信道沃尔什序列（W_2^4）从经去扰频的数据除去数据子信道覆盖。子信道去扩展单元 624 和 626 根据导频子信道沃尔什序列（W_0^4）从经去扰频的数据除去数据子信道覆盖。

把来自子信道去扩展单元 624 和 626 的输出提供给去复用器(De-Mux)628。去复用器 628 分离出相应于导频码元、速率指示码元和数据请求码元的所接收到的控制信道的不同部分，并把数据输出到三个不同的输出。

把去复用器 628 提供到第一输出的导频码元提供给导频滤波器 632，为了降低在所接收到的导频信号上的噪声影响，导频滤波器 632 在信号上执行移动平均滤波操作。把来自导频滤波器 632 的 I 和 Q 分量提供给点积电路 630，点积电路 630 执行 QPSK 数据信道的相干解调。点积单元的设计是本技术领域中众所周知的，在题为“导频载波点积电路”的美国专利第 5,506,865 号中详细描述该技术，该专利已转让给本发明的受让人，并在此引用作为参考。

把点积单元输出的经解调的数据信号提供给重复组合器 638。重复组合器 638 根据速率指示解码器 634 提供的经检测的反向链路速率信号对在分组中的经重复的码元进行组合。把经组合的码元能量提供给去交错器 640，它根据速率指示解码器 634 提供的经检测的速率指示信号对码元进行再排序。把经再排序的码元提供给解码器 642，它根据经检测的速率指示信号对码元进行解

码。在示例实施例中，解码器 642 是加速按键解码器，在本技术领域中众知它的实施，并在美国专利第 5,446,747 中详述。可把本发明等同地应用于其它解码器结构，诸如格式码（trellis）解码器和块码解码器。

去复用器 628 在第二输出上把所接收到的相应于速率指示信号的码元能量提供给速率指示解码器 634。可以以多种方式实施速率指示解码器 634，诸如通过使用相关器组使所接收到的码元能量与可能的速率指示波形进行相关。将检测具有最大相关能量的波形作为所发送的波形，因此确定速率指示值。把速率指示值提供给重复组合器 638、去交错器 640 和解码器 642，以辅助在这些单元中的操作。

去复用器 628 在第三输出上把所接收到的相应于速率请求消息信号的码元能量提供给速率请请求（DRQ）解码器 636。在远程站的有效组中的每个基站试图使用所分配的沃尔什序列对速率请求消息进行解码。只有远程站希望向其发送数据的基站才能够正确地对速率请求消息进行解码。在所选择的基站或扇区从速率请求消息除去沃尔什覆盖之后，使消息进行块解码，以把所请求的速率信息提供给基站。把该信息提供给在所选择的基站或扇区中的控制处理器，它根据该速率请求对到远程站的数据发送进行调度。

提供较佳实施例的上述描述，以使熟悉本领域技术的人员可以制造或使用本发明。熟悉本领域技术的人员将不费力地明了这些实施例的各种修改，可以把这里所定义的一般原理应用到其它的实施例而不需要用发明创造。因此，不打算把本发明限于这里所示出的实施例，而是和这里所揭示的原理和新颖特征符合的最宽广的范围相一致。

说 明 书 附 图

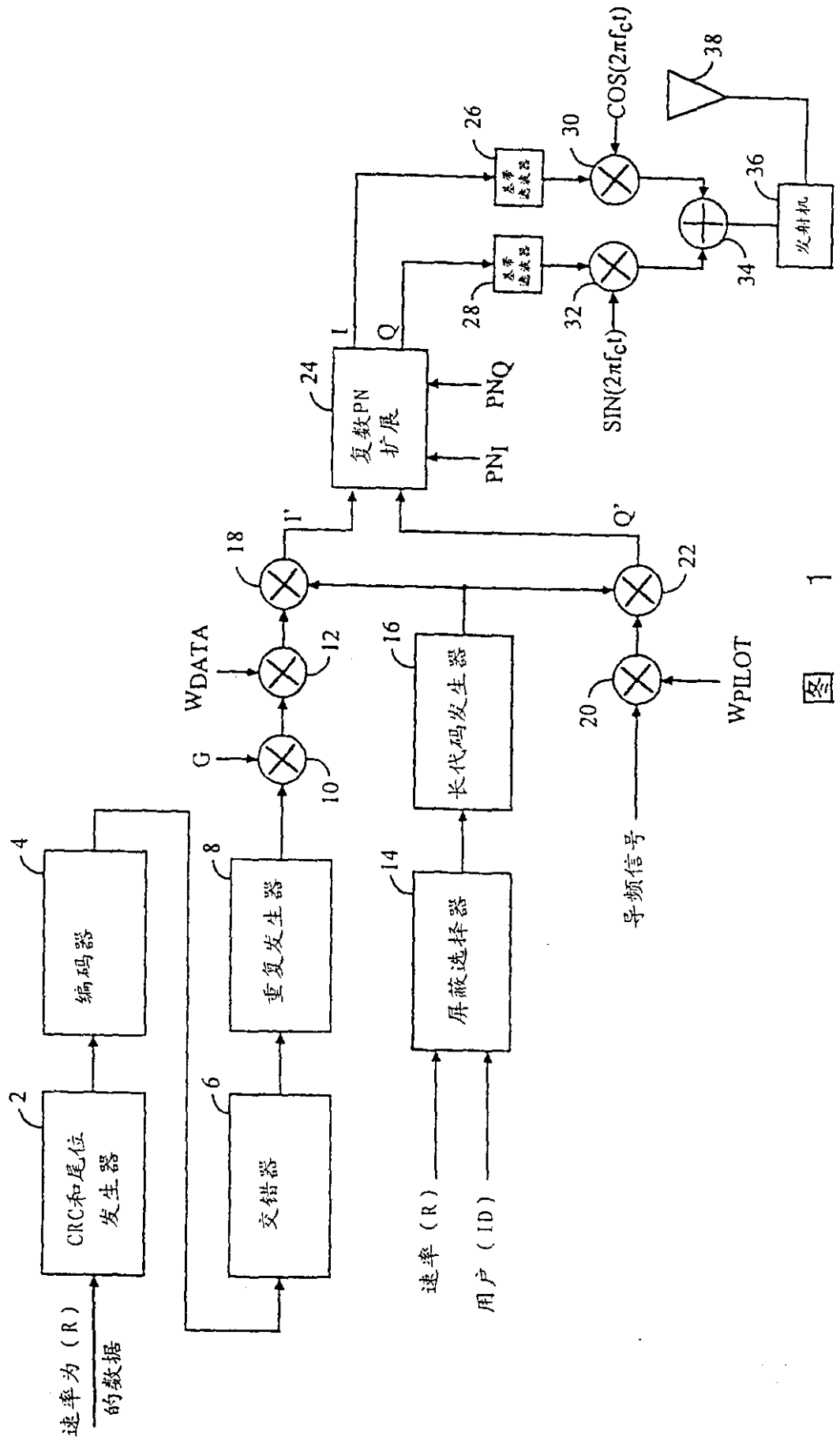
速率为（R）的数据
CRC和尾位发生器
编码器
交错器
重复发生器
速率（R）
用户（ID）
屏蔽选择器
长代码发生器
导频信号
G
WDATA
WPILOT
复数PN扩展
PNI
PNQ
I
Q
I'
Q'
基带滤波器
基带滤波器
SIN(2πfct)
COS(2πfct)
发射机
2
4
6
8
10
12
14
16
18
20
22
24
26
28
30
32
34
36
38

图 1

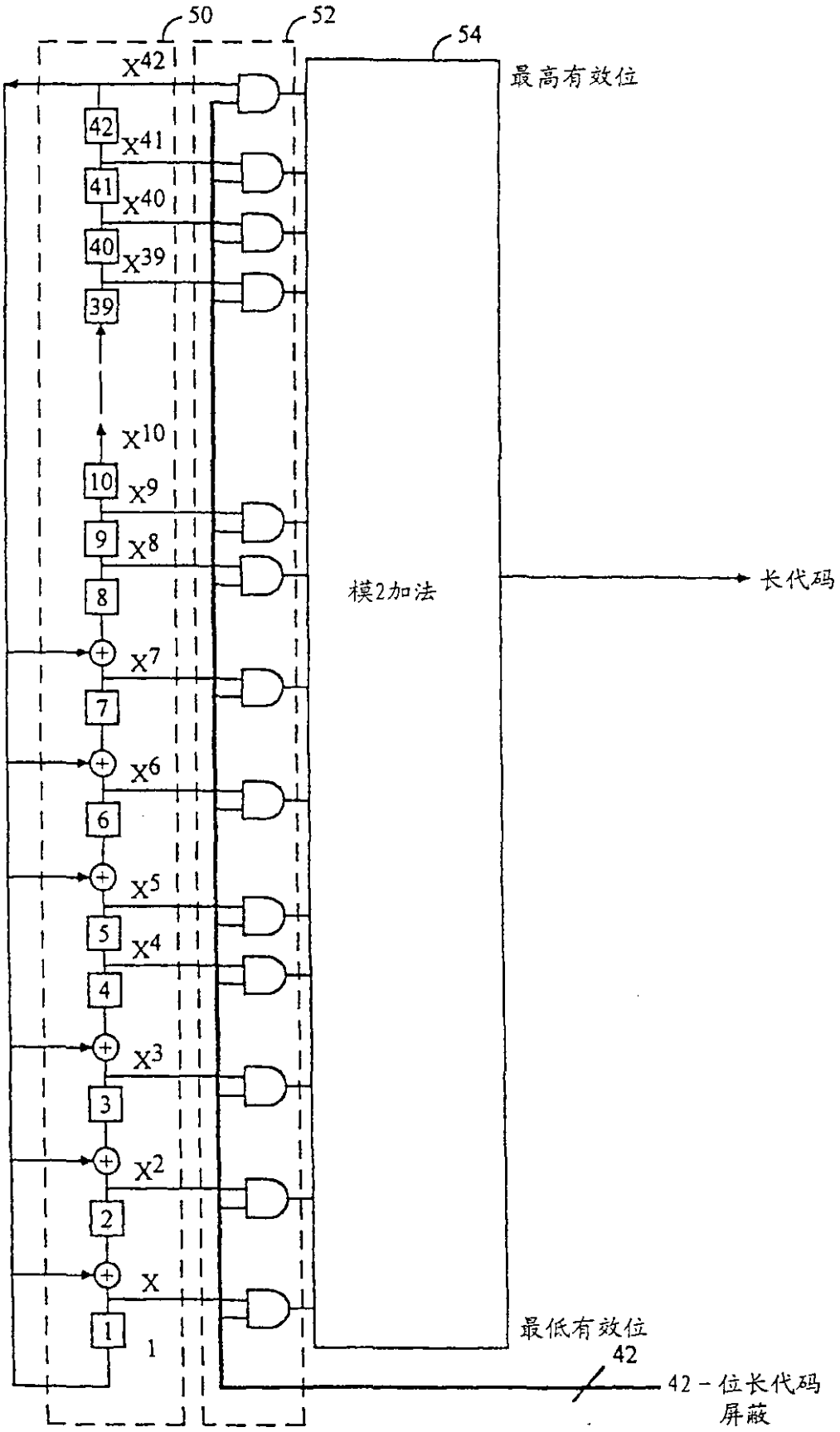
50
52
54
X^{42}
最高有效位
42
X^{41}
41
X^{40}
40
X^{39}
39
X^{10}
10
X^{9}
9
X^{8}
8
模2加法
长代码
X^{7}
7
X^{6}
6
X^{5}
5
X^{4}
4
X^{3}
3
X^{2}
2
X
1
1
最低有效位
42
42－位长代码
屏蔽

图 2

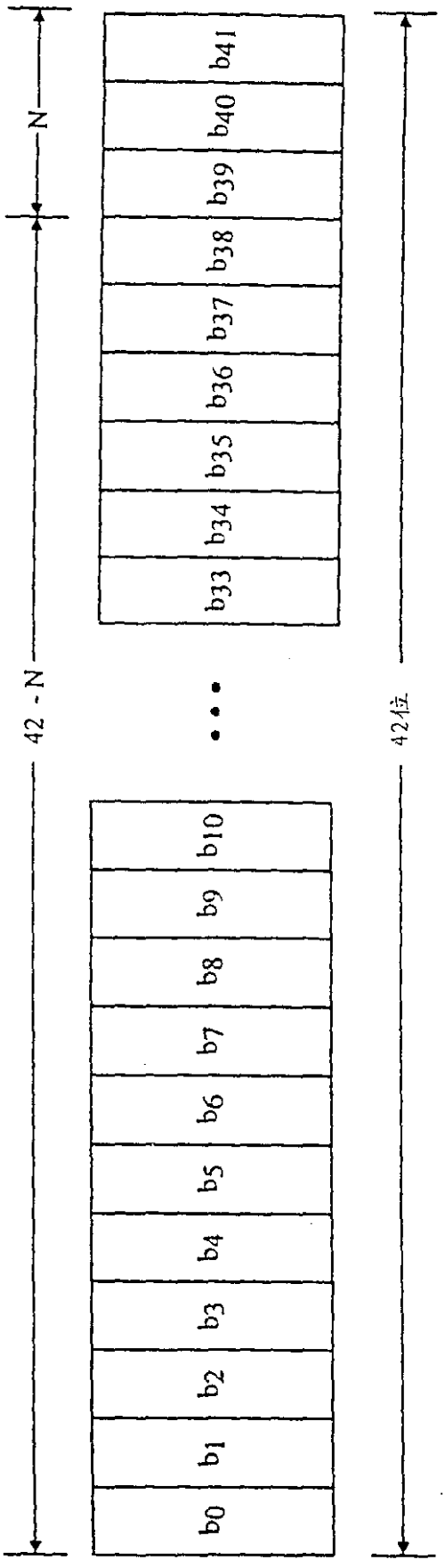
N
42 - N
42位
b0
b1
b2
b3
b4
b5
b6
b7
b8
b9
b10
b33
b34
b35
b36
b37
b38
b39
b40
b41

図 3

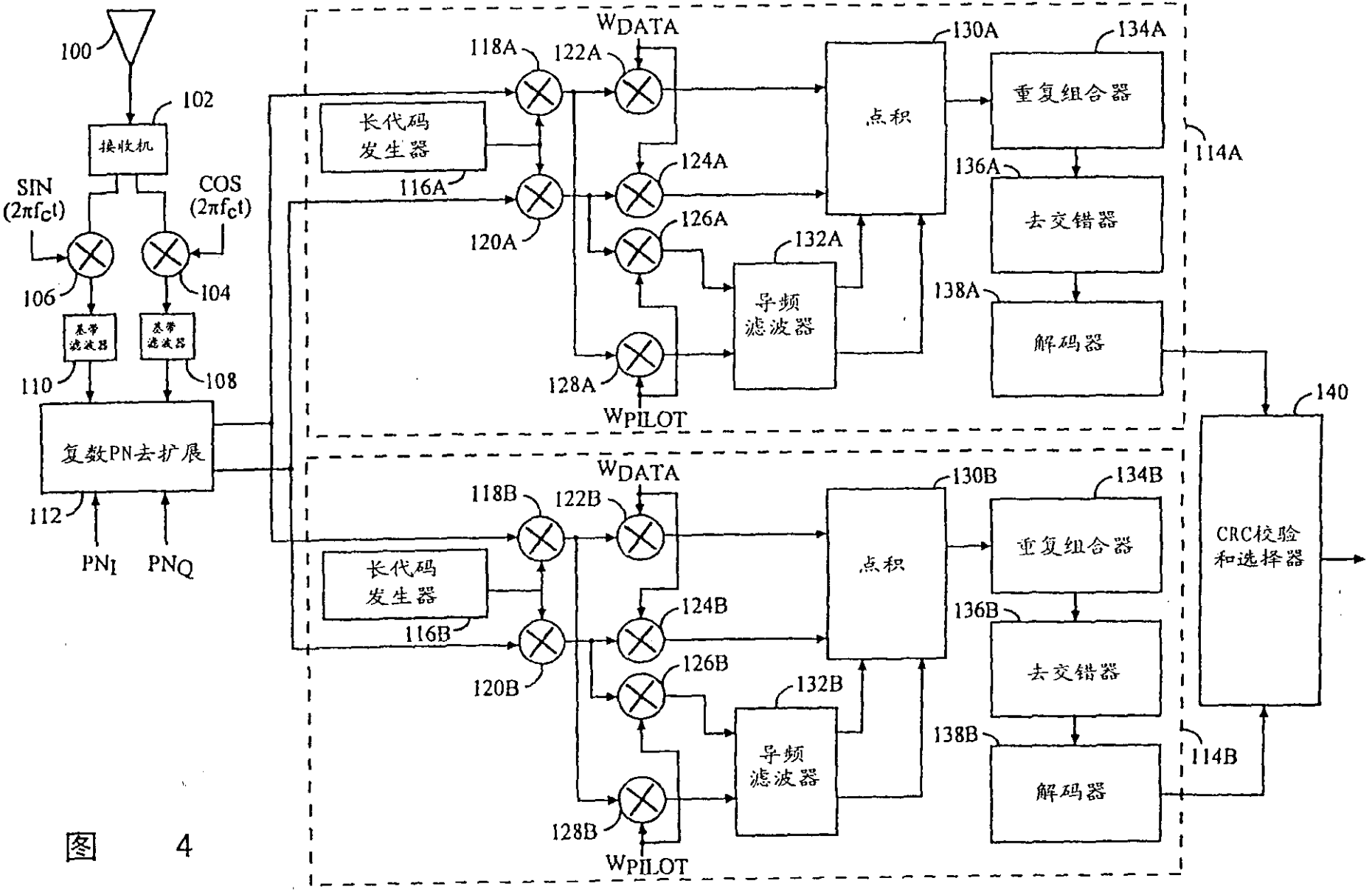
100
102
接收机
SIN
(2πfct)
COS
(2πfct)
106
104
基带滤波器
基带滤波器
110
108
复数PN去扩展
112
PNI
PNQ
WDATA
118A
122A
长代码发生器
116A
120A
124A
126A
132A
导频滤波器
128A
WPILOT
点积
130A
重复组合器
134A
114A
136A
去交错器
138A
解码器
140
CRC校验和选择器
WDATA
118B
122B
长代码发生器
116B
120B
124B
126B
132B
导频滤波器
128B
WPILOT
点积
130B
重复组合器
134B
136B
去交错器
138B
解码器
114B

图 4

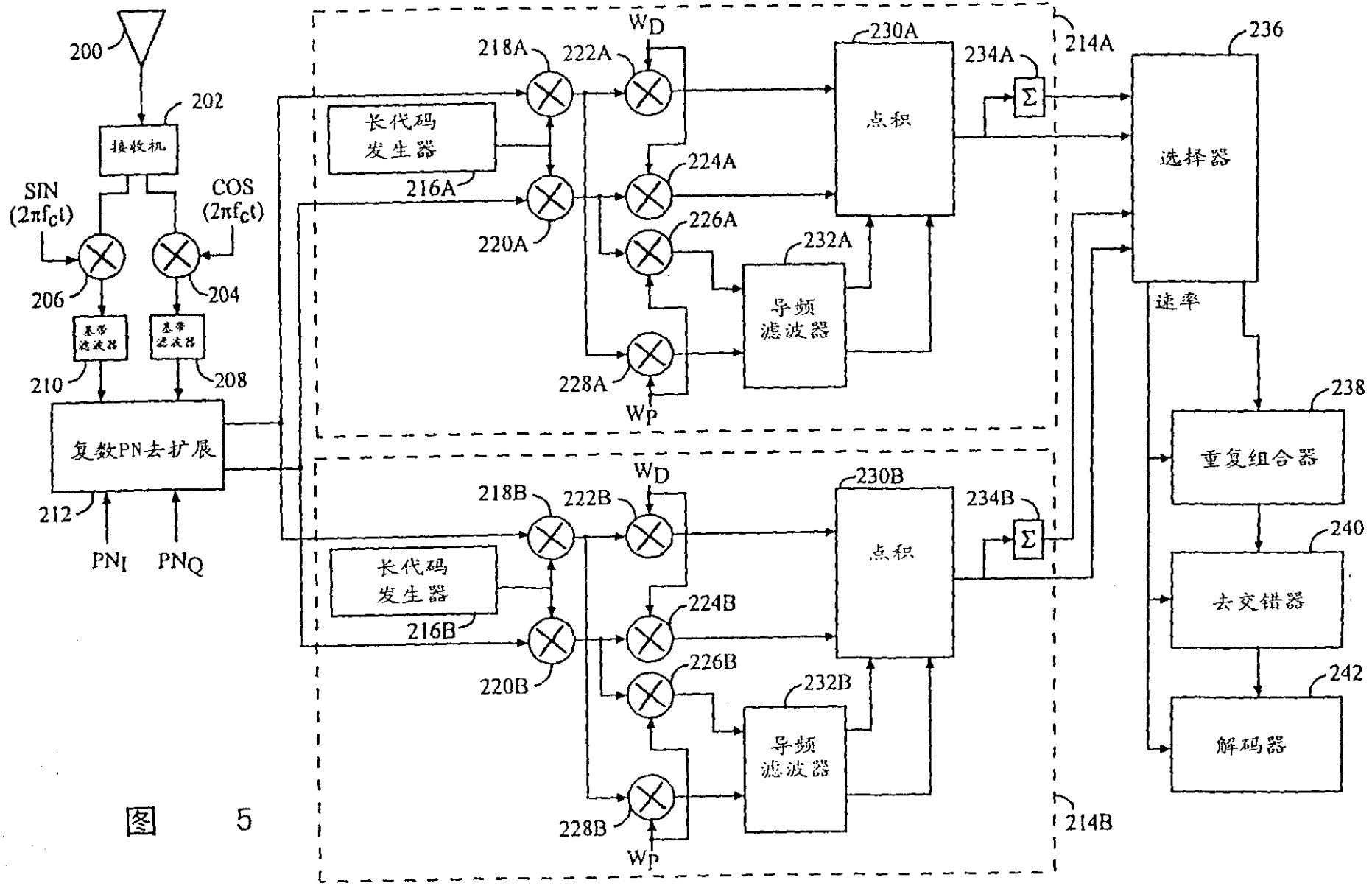
200
202
接收机
SIN
(2πfct)
COS
(2πfct)
206
204
基带滤波器
基带滤波器
210
208
复数PN去扩展
212
PNI
PNQ
WD
218A
222A
长代码发生器
216A
220A
224A
226A
232A
导频滤波器
228A
WP
230A
点积
234A
Σ
214A
236
选择器
速率
238
重复组合器
240
去交错器
242
解码器
218B
222B
216B
220B
224B
226B
232B
228B
230B
234B
214B

图 5

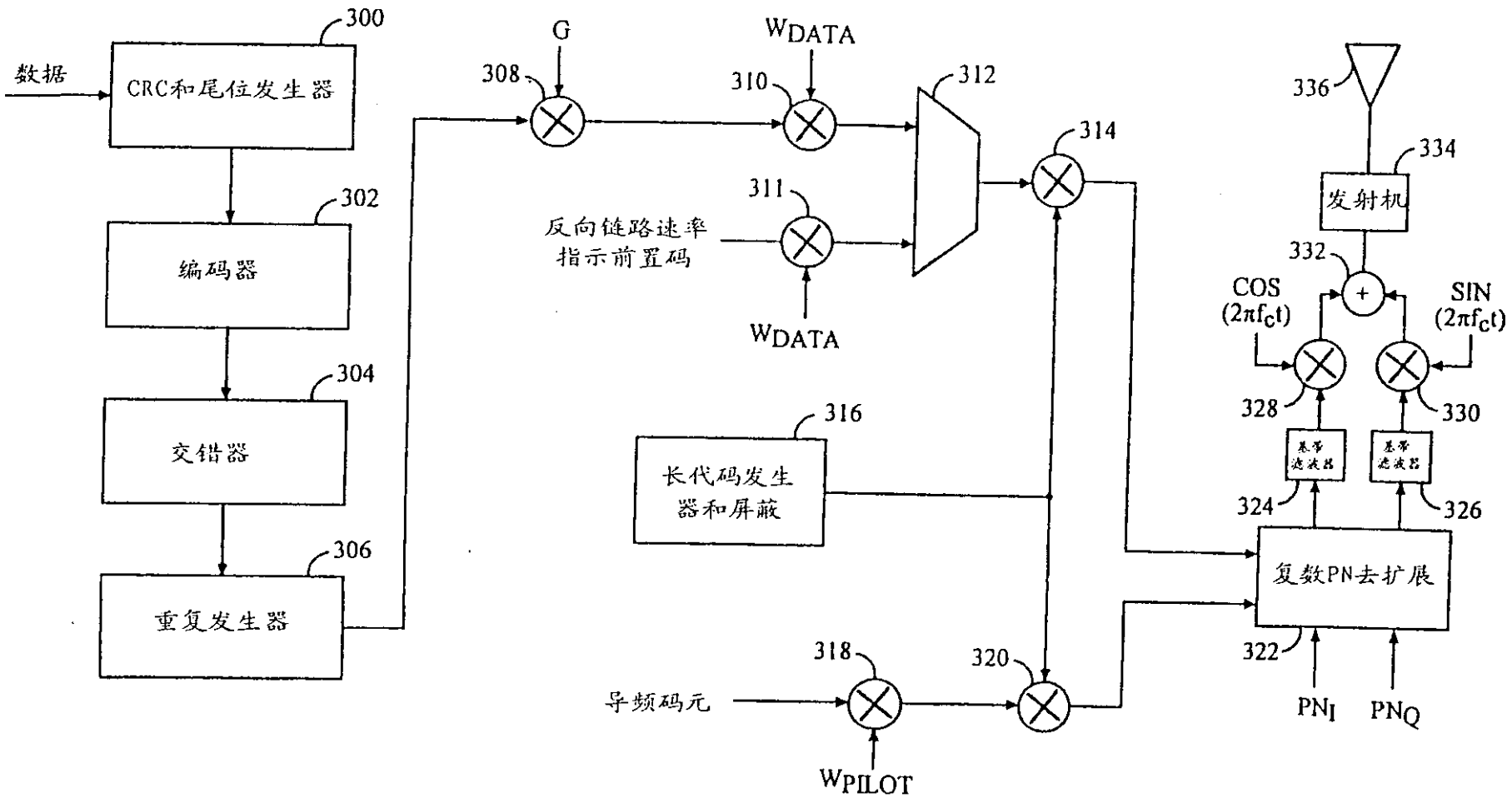
数据
CRC和尾位发生器
300
编码器
302
交错器
304
重复发生器
306
G
308
WDATA
310
311
反向链路速率
指示前置码
WDATA
312
314
长代码发生
器和屏蔽
316
导频码元
318
320
WPILOT
336
发射机
334
332
COS
(2πfct)
SIN
(2πfct)
328
330
基带
滤波器
基带
滤波器
324
326
复数PN去扩展
322
PNI
PNQ

图 6

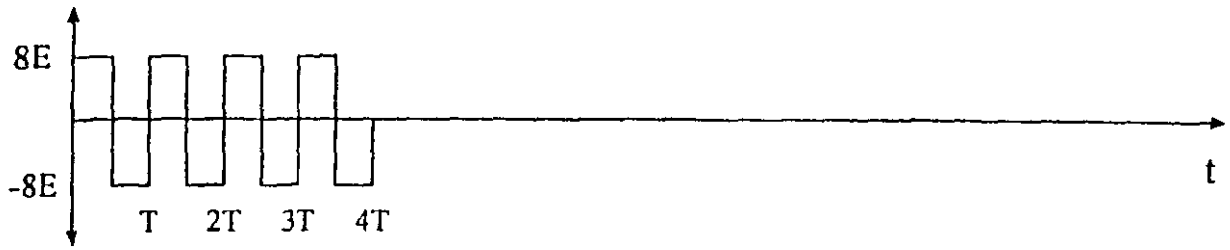

图 7A

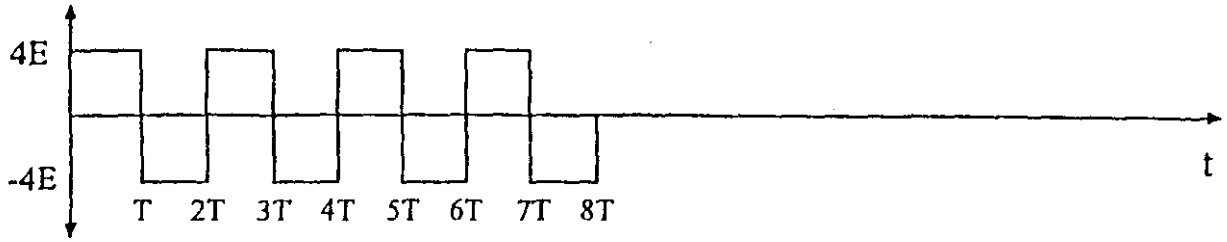

图 7B

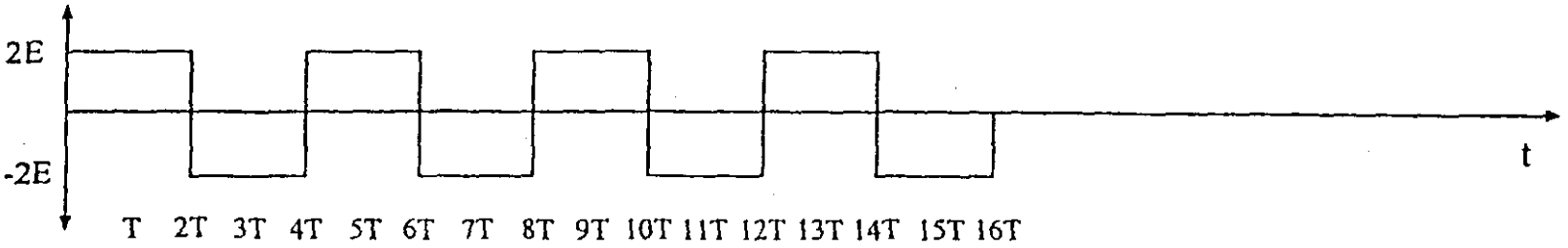

图 7C

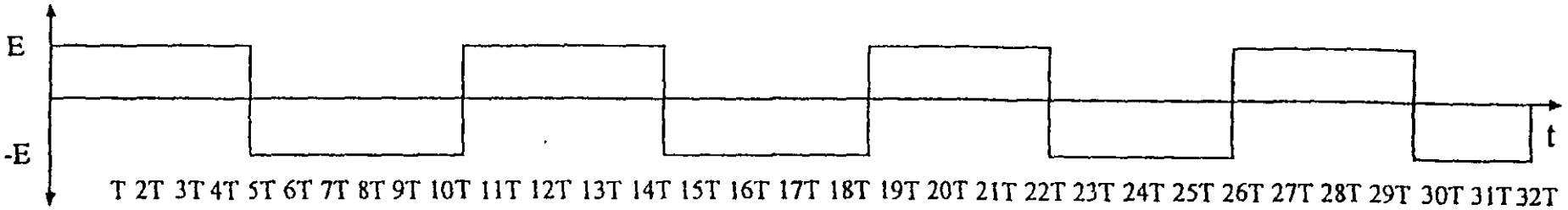

图 7D

图 7E

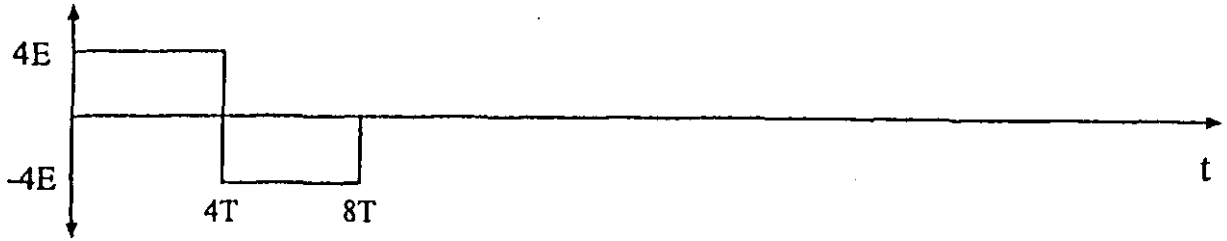

图 7F

图 7G

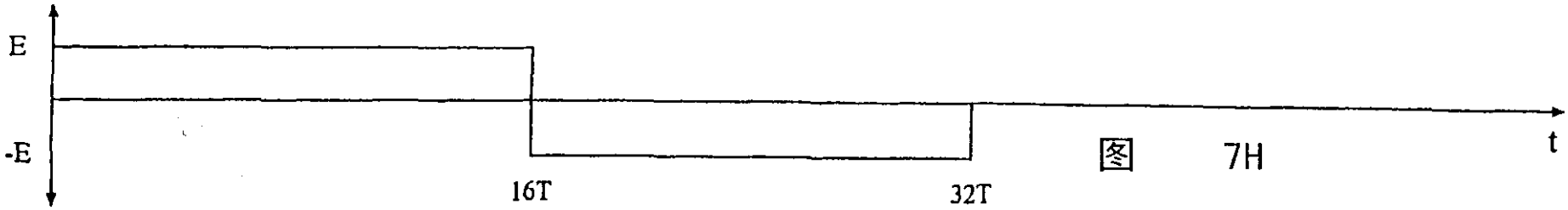

图 7H

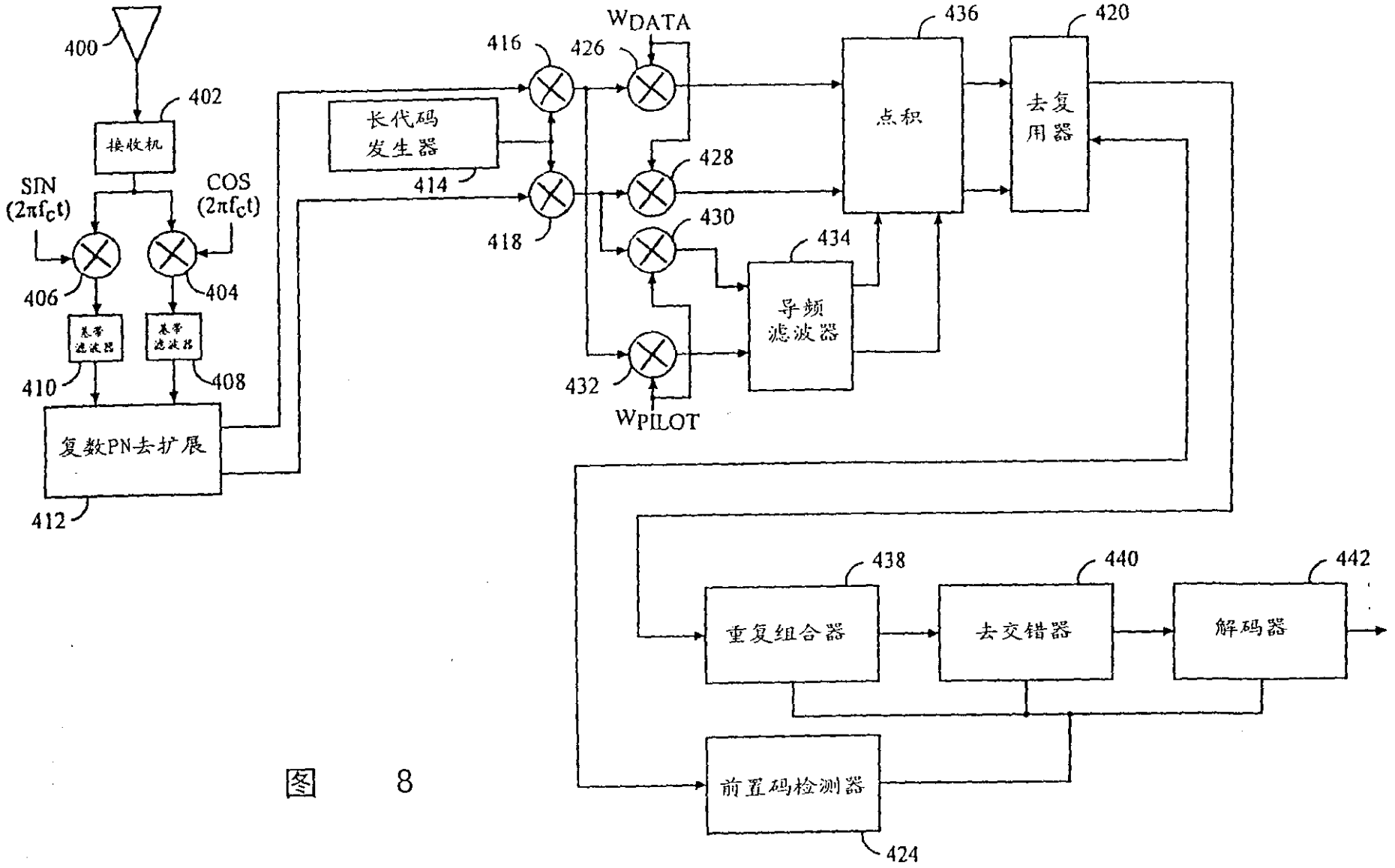
400
402
接收机
SIN
(2πfct)
COS
(2πfct)
406
404
基带滤波器
基带滤波器
410
408
复数PN去扩展
412
长代码
发生器
414
416
418
WDATA
426
428
430
432
WPILOT
导频
滤波器
434
点积
436
去复
用器
420
重复组合器
438
去交错器
440
解码器
442
前置码检测器
424

图 8

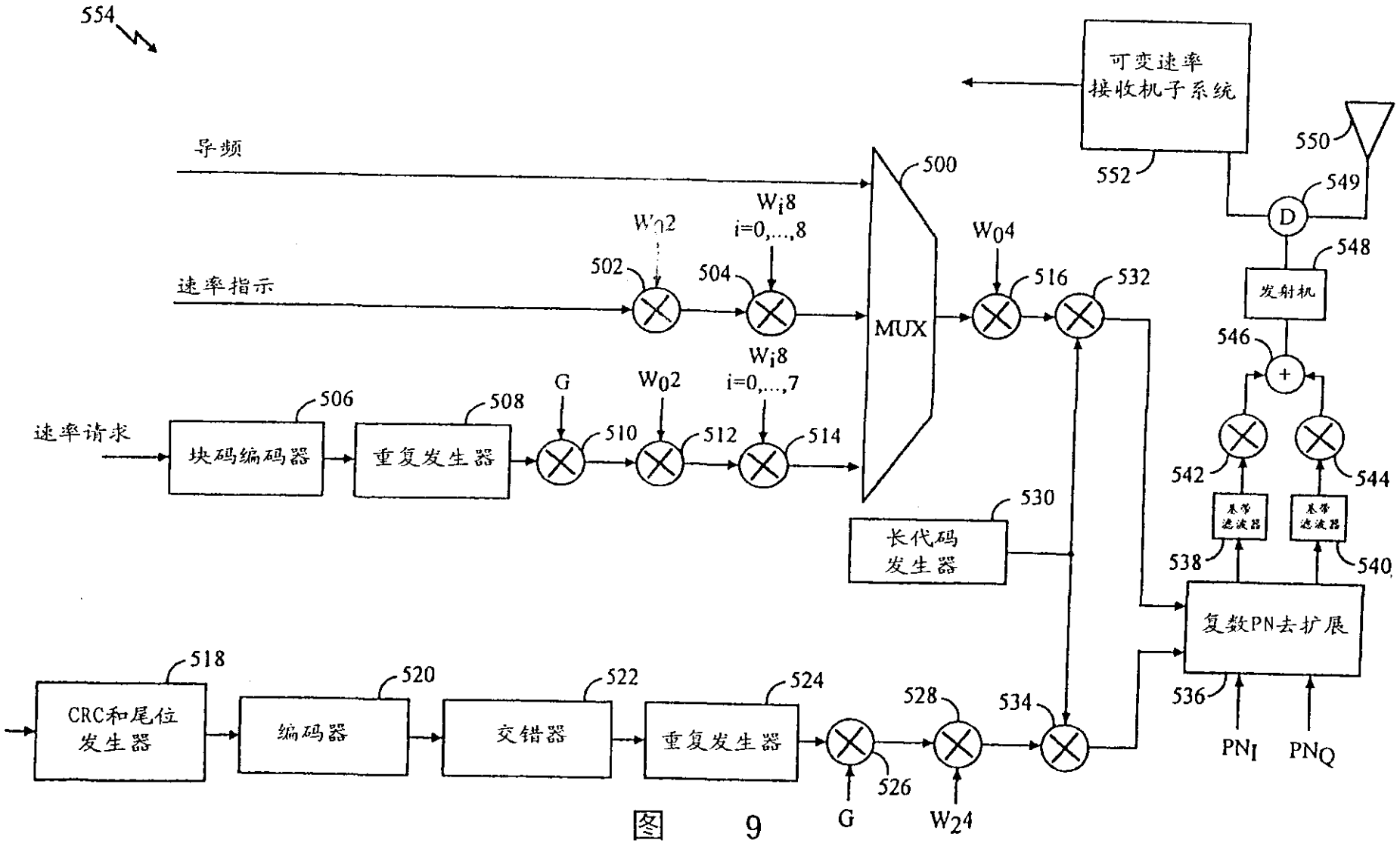
554
导频
速率指示
速率请求
块码编码器
506
重复发生器
508
G
510
W02
512
Wi8
i=0,...,7
514
W02
502
504
Wi8
i=0,...,8
MUX
500
W04
516
532
长代码
发生器
530
CRC和尾位
发生器
518
编码器
520
交错器
522
重复发生器
524
G
526
W24
528
534
可变速率
接收机子系统
552
550
549
D
548
发射机
546
+
542
544
基带
滤波器
538
540
复数PN去扩展
536
PNI
PNQ

图 9

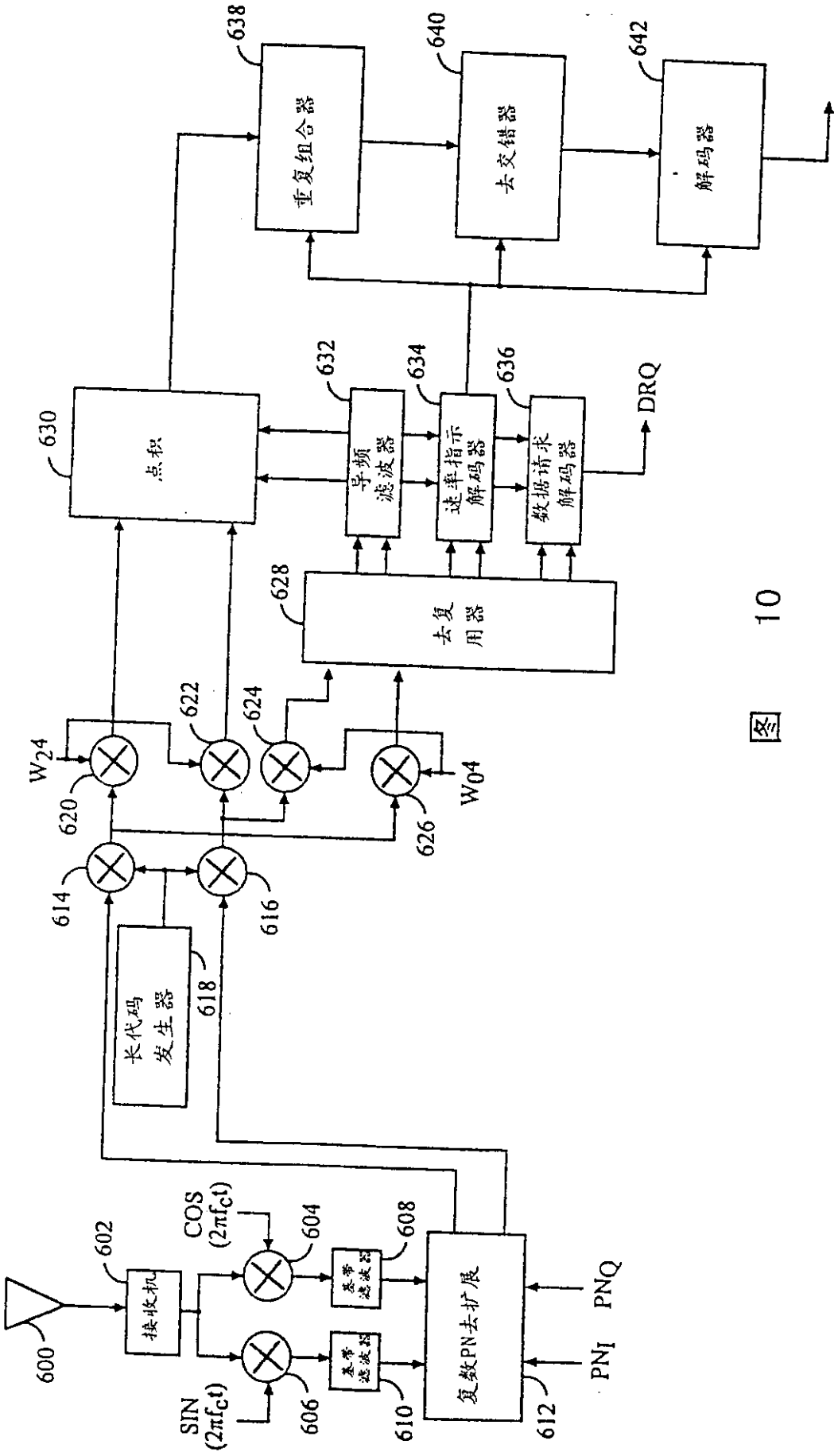
600
602
接收机
COS
(2πfct)
SIN
(2πfct)
604
606
基带滤波器
基带滤波器
608
610
复数PN去扩展
612
PNI
PNQ
614
616
长代码
发生器
618
W24
620
622
624
626
W04
去复用器
628
点积
630
导频滤波器
632
速率指示解码器
634
数据请求解码器
636
DRQ
重复组合器
638
去交错器
640
解码器
642

图 10