June 10, 1958 R. J. MEREDITH 2,837,928

INDEXING AND STROKE CONTROL MECHANISMS FOR RECIPROCATING DEVICES

Filed Nov. 17, 1954 5 Sheets-Sheet 1

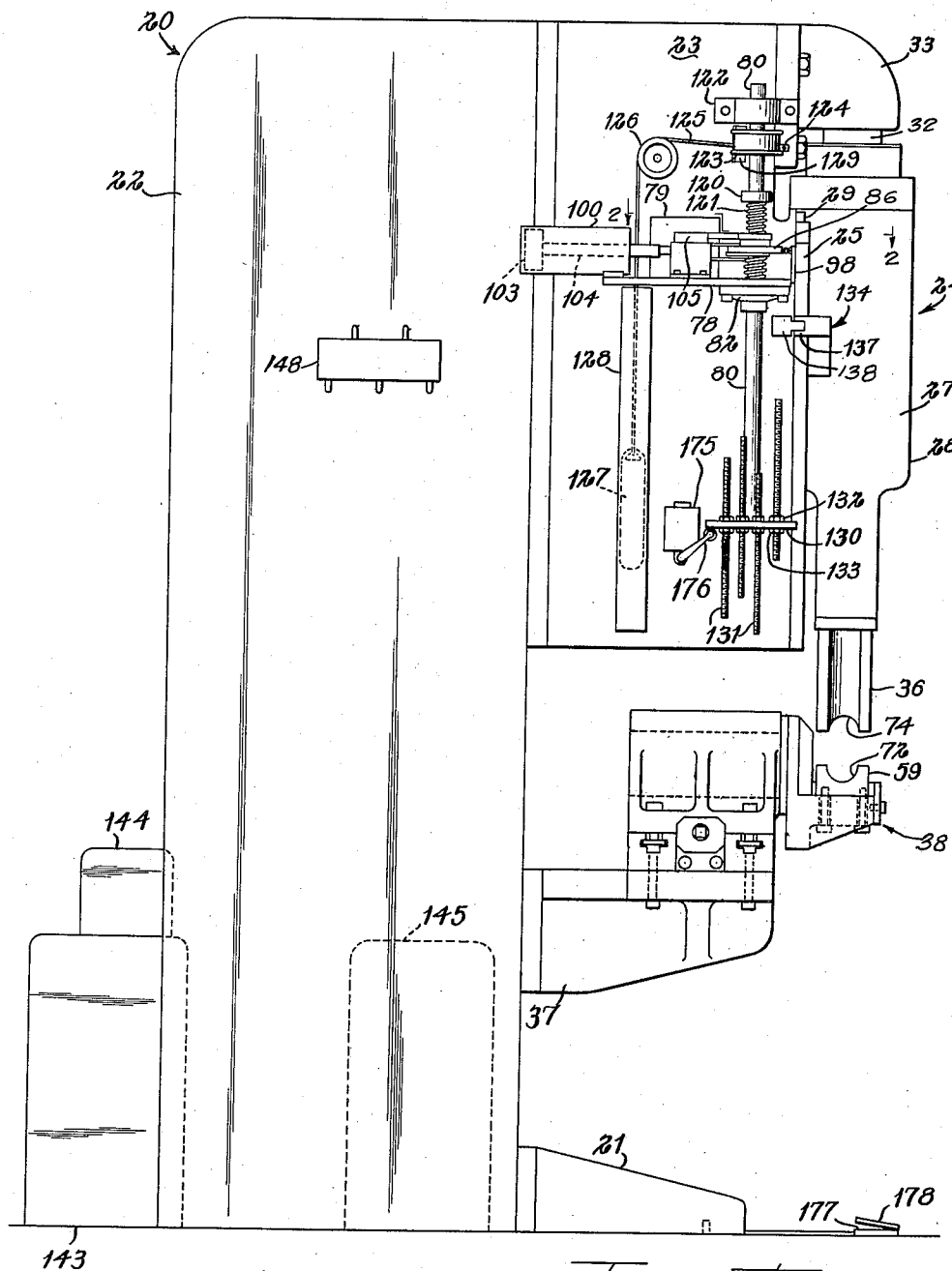

Fig. 1

Inventor
ROBERT J. MEREDITH

Charles A. Redman Atty.

June 10, 1958 R. J. MEREDITH 2,837,928

INDEXING AND STROKE CONTROL MECHANISMS FOR RECIPROCATING DEVICES

Filed Nov. 17, 1954 5 Sheets-Sheet 2

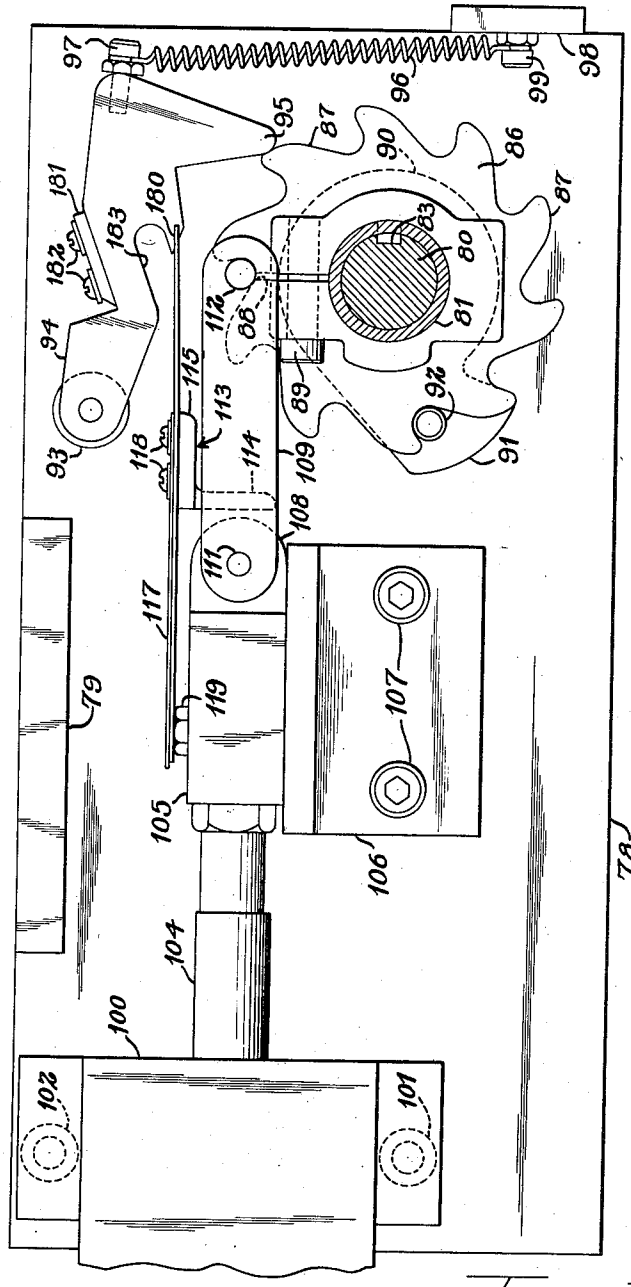

Fig. 2

Inventor
ROBERT J. MEREDITH

Charles N. Lemmon Atty.

June 10, 1958 R. J. MEREDITH 2,837,928

INDEXING AND STROKE CONTROL MECHANISMS FOR RECIPROCATING DEVICES

Filed Nov. 17, 1954 5 Sheets-Sheet 3

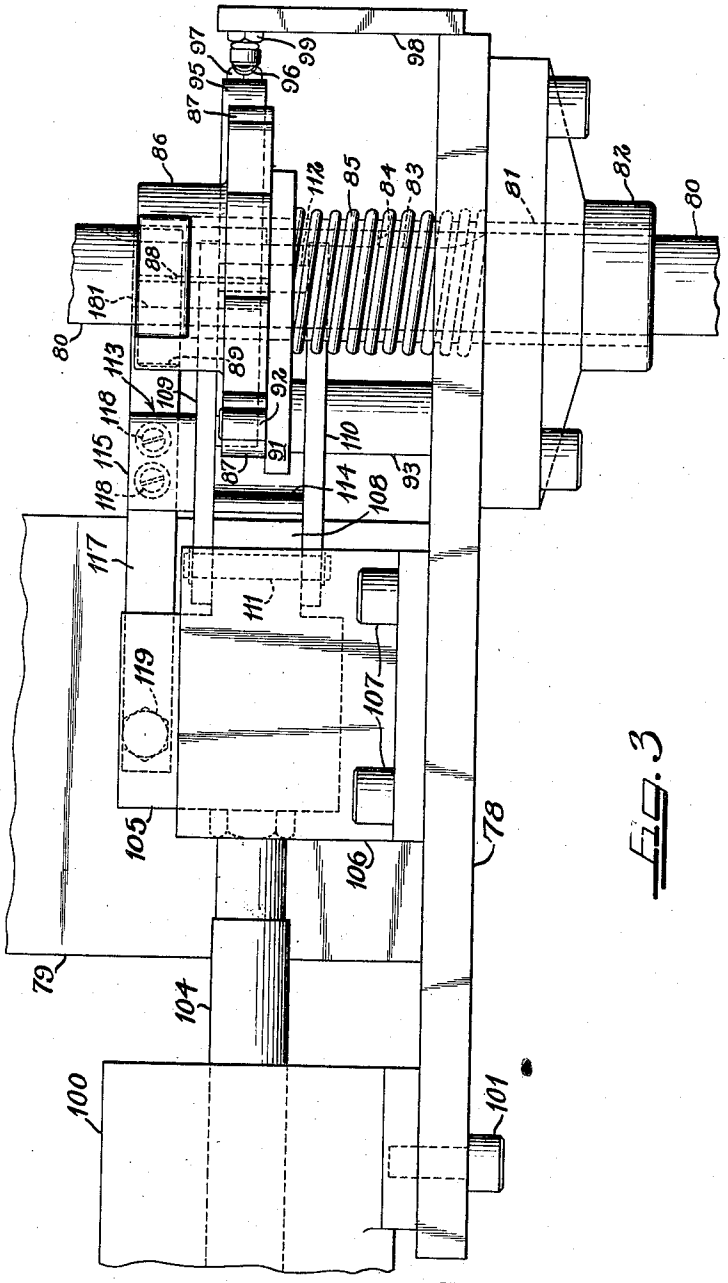

Fig. 3

Inventor
ROBERT J. MEREDITH

Charles H. Redman Atty.

June 10, 1958 R. J. MEREDITH 2,837,928

INDEXING AND STROKE CONTROL MECHANISMS FOR RECIPROCATING DEVICES

Filed Nov. 17, 1954 5 Sheets-Sheet 4

Fig. 4

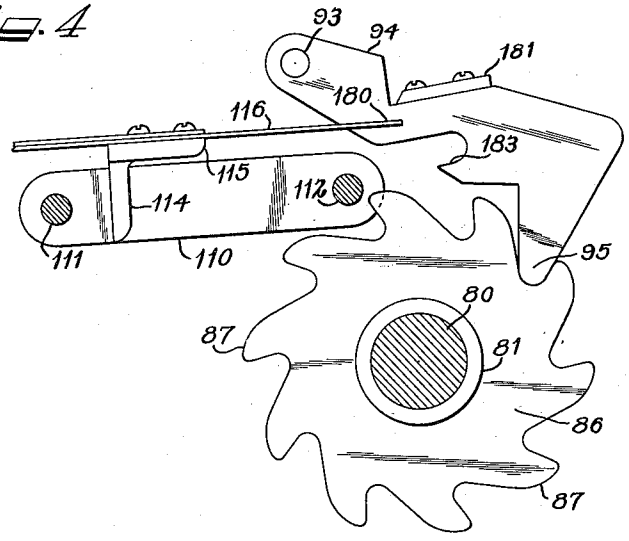

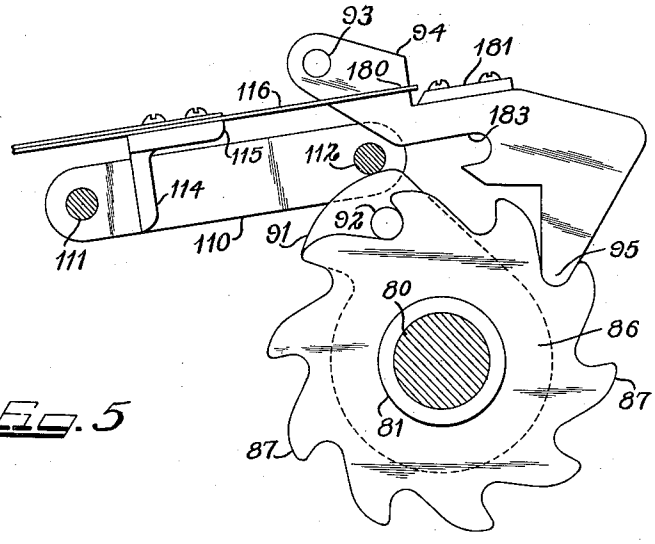

Fig. 5

Inventor
ROBERT J. MEREDITH

Charles W. Redman Atty.

June 10, 1958 R. J. MEREDITH 2,837,928

INDEXING AND STROKE CONTROL MECHANISMS FOR RECIPROCATING DEVICES

Filed Nov. 17, 1954 5 Sheets-Sheet 5

Fig. 6

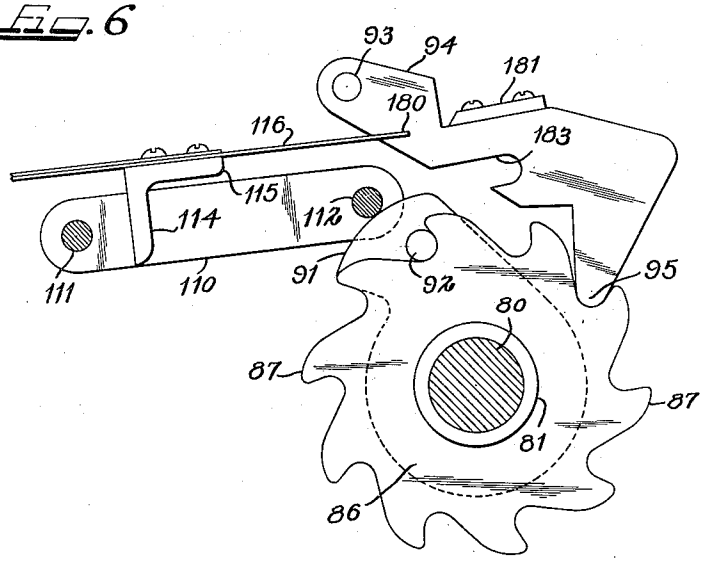

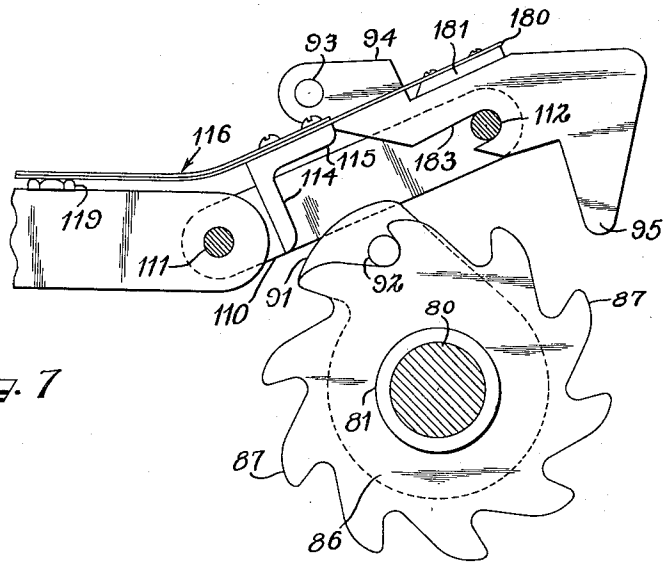

Fig. 7

Inventor
ROBERT J. MEREDITH

Charles W. Redman Atty.

United States Patent Office

2,837,928

Patented June 10, 1958

2,837,928

INDEXING AND STROKE CONTROL MECHANISMS FOR RECIPROCATING DEVICES

Robert J. Meredith, Elburn, Ill., assignor to Pines Engineering Co., Inc., Aurora, Ill., a corporation of Illinois

Application November 17, 1954, Serial No. 469,338

5 Claims. (Cl. 74—152)

This invention relates to control mechanisms and more particularly to an indexing and stroke control device for use with a tube bending machine.

In the operation of the tube bending machines, quite frequently it is necessary to form a number of bends in a length of tubing with the bends having different depths or angles and lying in different planes. Usually, such tubing workpieces are difficult to handle unless a number of presses and different tooling set-ups are employed.

In the present invention, there is provided a tube bending machine construction having a novel control mechanism by which multiple bends in different planes are accomplished with but one tooling set-up.

A reciprocating ram carries a bending form which cooperates with a pressure die mechanism to form a bend. The depth of the bend is determined by the distance the bending form travels after initial engagement with the length of tubing positioned in the pressure die mechanism. Accordingly, by controlling the length of the stroke of the ram at each operation, it is possible to obtain a series of bends each having a different depth and lying in the same or a different plane than that of another bend.

An adjustable indexing mechanism is provided to control a series of successive strokes of the ram. Generally, this indexing mechanism includes a turret which is partially rotated with each return stroke of the operating ram. The turret has a number of longitudinally adjustable screws extending parallel to the stroke axis of the ram. The screws are intermittently and successively rotated to an operating position with each stroke of the ram. As the ram in its working stroke contacts a screw at the operating position, the turret is carried with the ram into contact with a switch located in a fixed position. Operation of the switch serves to reverse the direction of stroke of the ram. The adjusted length of a screw, then, determines the working stroke travel of the ram and depth or angle of the bend.

It is, then, an important object of this invention to provide a novel indexing and control mechanism for a stroking device.

Another object of the invention is to provide a novel indexing and control mechanism for a reciprocating device for controlling the length of each stroke.

A further object of the invention is to provide a novel indexing and control mechanism for a reciprocating device for controlling the length of each stroke in a series.

Another and further object of the invention is to provide a novel indexing and control mechanism for a reciprocating device for controlling the successive lengths of strokes in a series.

Other and further objects and advantages of the invention will become apparent to those skilled in the art from the following detailed description of the annexed sheets of drawings, which disclose preferred embodiments of the invention.

On the drawings:

Figure 1 is a side view in elevation of a tube bending machine embodying my invention of an indexing and stroke control mechanism;

Figure 2 is an enlarged fragmental plan view in elevation of the indexing mechanism as seen when taken along a plane indicated by the line 2—2 of Figure 1;

Figure 3 is a fragmental front view in elevation of the indexing mechanism shown in Figure 2;

Figure 4 is a diagrammatic view of the indexing mechanism illustrating the normal operation of the ratchet wheel, pawl and actuator;

Figure 5 is a diagrammatic view of the indexing mechanism in which the ratchet wheel is provided with a striking cam for limiting a series of intermittent partial rotations of the wheel and illustrating the relative positions of parts as the striking cam is moved to operative position;

Figure 6 is a view, similar to Figure 5, illustrating the cooperation of parts when the ratchet wheel actuator has been moved to inoperative position;

Figure 7 is a view, similar to Figures 5 and 6, illustrating the cooperation of parts to disconnect the ratchet wheel and pawl at the end of a series of partial rotations of the ratchet wheel.

Referring now in detail to the drawings, my invention is shown as embodied in a tube bending machine 20. It is to be understood, however, that the indexing and stroke control mechanism of this invention may be used in association with any reciprocating device and whether vertical or horizontal.

A tube bending machine 20 includes a base 21 and a frame 22. A secondary frame 23 is mounted on the face of the main frame 22 and supports both the indexing and stroke control mechanisms of this invention and a bending ram construction 24. Spaced guide members 25 (only one shown), on the secondary frame 23, form a slide for receiving a reciprocating ram 27. The ram has a cylinder body 28 with wing slides 29 seated between the frame 23 and the guide members 25. This permits the ram to slide vertically in the guide.

A piston (not shown), within the cylinder 28, has a piston rod 32 depending from a support 33 attached by bolts or other suitable means to the frame 23.

A bending die 36 of generally semi-circular shape is carried at the end of the cylinder 28. It is preferred that the die be removably attached.

In the structure so far described, the cylinder 28 moves relative to the stationary piston when fluid under pressure is introduced at either end of the cylinder.

A support table 37, mounted on the main frame 22 of the machine and located beneath the secondary frame 23, carries a pressure die mechanism generally indicated at 38. The pressure die mechanism includes a pair of pressure dies 59 (only one shown) located on opposite sides of and equally spaced from the vertical axis of the bending die 36. These pressure dies are adjustably mounted so as to align their tube receiving grooves 72 with a similar groove 74 in the bending die. Insofar as the apparatus has been described, the operation is as follows: A length of tubing is laid across the pressure dies 59 and as the bending die 36 moves downwardly, the tubing bends around the bending die. The depth of the bend is determined by the distance the bending die moves relative to the pressure dies, consequently, novel means is provided to limit movement of the bending die.

The mechanism for controlling the length of the stroke of the ram cylinder and the bending die carried thereby will now be described.

A plate shelf 78 having an upstanding wall 79 is suitably attached and secured to one side of the secondary frame 23 of the bending machine. As best shown in Figures 1, 2 and 3, a shaft 80 extends vertically through and beyond the top and bottom of the shelf adjacent its outer end,

A sleeve or bushing **81** freely embraces a portion of the shaft and extends through the shelf into a press fit within the inner race of a bearing **82** carried on the underside of the shelf. A keyway **83** in the shaft receives therein a key **84** carried by the sleeve thereby locking the shaft and sleeve for co-rotation but permitting relative endwise movement of the shaft. A coiled spring **85** embraces the sleeve **81**, extends through the shelf **78** and seats on the bearing **82** for a purpose to be described later herein.

A ratchet wheel **86**, having a plurality of teeth **87**, **87** and longitudinally split as at **88**, has a stud **89** for adjustably clamping the wheel to the sleeve **81**. A cam plate **90** rotatably embraces the sleeve **81** and is maintained against the underside of the ratchet wheel by the coiled spring **85**. One portion of the cam plate is extended to form a striking cam **91** so shaped as to provide a cam surface extending from the end of one ratchet tooth **87** to a point spaced radially outward of the next and clockwise adjacent tooth. A pin **92**, carried by the striking cam, is so positioned as to be rotated with the cam plate to seat between any pair of adjacent teeth **87**, **87**. When so positioned, the coiled spring **85** maintains the relation of parts. By depressing the cam plate and collapsing the coiled spring, the pin may be rotated with the plate to any desired seat between ratchet teeth.

A post **93**, extending upwardly from the plate shelf, carries one end of a swinging pawl **94**. The opposite end is formed as a pawl tooth **95** shaped to seat between adjacent ratchet teeth. The pawl tooth is spring urged into seated position by a coiled spring **96**. One end of the spring is secured to the pawl by a stud **97** and the other end is secured to a standard **98** connected to the shelf by a stud **99**.

The inner end of the shelf carries the front end of a cylinder **100** which is secured by means of studs **101** and **102**. The other end of the cylinder is carried (not shown) by the main frame **22** of the tube bending machine. A piston **103** has a piston rod **104** extending forwardly in connection with one end of a sliding connector block **105**. An angle member **106**, acting as a lateral slide guide for the block, is adjustably secured to the shelf by means of studs **107**, **107** or the like. The other end of the sliding connector block has a flange **108** to which is connected one end of a link assembly having an upper link **109** and a lower link **110** by a pin **111**. Another pin **112** extends through and is carried by the links at the other end of the link assembly and is arranged to engage between adjacent ratchet teeth.

A mounting member **113** has one leg **114** secured to and between the links and another leg **115** extending parallel to one side of the links. A long flat and relatively flexible spring **116** is intermediately mounted on the leg **115** and is reinforced by a relatively short spring **117**. The springs are secured to the mounting leg **115** by studs **118**, **118** or the like and the coextensive ends of the springs bear against the head of a stud **119** mounted in the connector block **105** to hold the complete link assembly **109**, **110** and **113** in a position in which the pin **112** is in engagement with the ratchet.

The cylinder **100** and piston **103** are so arranged that a stroke forwardly causes the pin **112** to rotate the ratchet wheel **86** a distance slightly greater than the width of one tooth **87**. The pawl tooth **95** cams over the sloping edge of a ratchet tooth from a position on one side thereof to the other side. When the pawl tooth engages between a pair of ratchet teeth the ratchet wheel is held against rotation in a counter-clockwise direction. This permits the piston **103** to travel in the opposite direction to withdraw the pin **112** from engagement with the ratchet wheel. This relation of parts is shown in Figure 8.

The shaft **80** is suspended on the frame **23** by means of an intermediate integral collar **120** and an abutting coiled spring **121** embracing the shaft and seated on the ratchet wheel **86**. A bearing **122**, carried by the secondary frame **23**, cooperates with the bearing **82** to maintain the shaft in vertical alignment.

A drum **123** is adjustably secured to the shaft **80** immediately above the collar **120**. An extending ear **124** anchors one end of a cable **125** which extends over a sheave wheel **126** rotatably mounted on the secondary frame **23**. The other end of the cable carries a weight **127** which moves within a cover tube or container **128**. The weight, through the cable and drum, exerts a torque on the shaft **80** tending to rotate it in a counter-clockwise direction which normally is prevented by the engagement of the pawl and ratchet, as previously described. The ear **124** also acts as an arm for engaging the forwardly extending stop plate **129** to limit the rotation of the drum **123** in a counter-clockwise direction. This limitation avoids a bottoming of the weight **127** in the container **128** and provides the initial or starting position of the device with the pawl and ratchet out of engagement.

On the lower end of the shaft **80** there is secured a turret plate **130**. A plurality of screw members **131**, **131** are threaded through the plate and adjustably secured in place by lock nuts **132** and **133**. It is desirable that all of the screw members be equidistantly spaced both from each other and from the longitudinal axis of the shaft **80**. The radial angles of spacing from the axis of the shaft **80**, both between adjacent teeth **87** of the ratchet wheel **86** and between adjacent screw members **131** of the turret **130**, are the same. That is, when the ratchet wheel is rotated to seat the pawl from one side of a tooth to the other, the turret plate is rotated to move one screw member into the position formerly occupied by an adjacent screw member. This position is directly under a selector trip arm assembly **134**.

The selector trip arm assembly is so positioned as to vertically align a trip arm **138** carried thereby with the screw member **131** moved into operating position by the indexing ratchet wheel **86**. With the ram cylinder in its uppermost position, as shown in Figure 1, the trip arm is so located as to be in spaced relation to the most upwardly extended adjustable screw member.

The operation of the tube bending machine, with the indexing and stroke control mechanisms, will now be described.

With the drum **123** rotated by the weight **127** to a position in which the extending ear **124** engages the stop plate **129**, the turret screw members are adjusted in a longitudinal direction to limit the length of successive strokes of the ram cylinder. As many screw members, starting with the screw member positioned beneath the trip arm **138** and working in a counter-clockwise direction on the turret plate, are adjusted as there are bends to be formed. Generally, the length of the stroke of the ram cylinder is the distance between the trip arm at the start of the power stroke and an adjusted screw member plus the distance the turret plate moves to actuate an arm **176** on a make and break switch **175** (Fig. 1). Consequently, a power stroke of the ram cylinder is determined by the adjusted length of a screw member above the turret plate.

The ratchet wheel **86** is then adjusted for the number of tubing bends desired. With the extending ear **124** of the drum in contact with the stop plate **129** and the pawl tooth **95** seated in a tooth recess of the ratchet plate, the cam plate **90** is manually forced down on the coiled spring **85** to release the pin **92**. The cam plate is then rotated to position the pin in a proper tooth recess and the manual pressure released. This recess will be spaced the same number of recesses from the first one in which the pawl engages as the number of bends to be accomplished. The coiled spring **85** maintains the cam plate and pin in adjusted position. As shown in Figures 2, 5, 6 and 7, the foregoing adjustment positions the striking cam **91** at the same tooth recess as that in which the pin **92** is seated.

The foregoing are the only adjustments necessary in pro-

viding a series of bends in a length of tubing. Once the adjustments are completed as many lengths of tubing as desired may be bent, the turret automatically repeating the cycle.

An operator positions the length of tubing in the aligned tube receiving grooves 72 of the pressure dies 59. Foot pressure exerted on a pedal 178 of a switch 177 closes a circuit to operate a motor 143 and pump 144 to admit fluid from a fluid reservoir 145 into the lower end of the ram cylinder 28 to start it on its downward power stroke. Cooperation of the bending die 36 with the pressure dies 59 and 66 effects a bending of the tubing. The depth of the bend is limited by the breaking of the turret switch 175 through the engagement of the trip arm 138 with a screw member 131 to move the turret plate 130 into engagement with and actuation of the switch arm 176.

As the ram cylinder starts on an upward or reverse stroke the indexing piston 103 moves forwardly toward the ratchet wheel 86. The ratchet actuator pin 112, moved forwardly by the piston 103, the piston rod 104, the connector block 105, and the links 109 and 110, rotates the ratchet wheel in a clockwise direction one notch. Simultaneously, the pawl tooth 95 cams on the rearwardly curved surface of the adjacent tooth 87 to seat in the next tooth recess. The coiled spring 96 pulls and holds the pawl in its seated position thereby locking the ratchet wheel against rotation in a counter-clockwise direction. It will be noted that the pawl tooth 95 engages the next tooth recess immediately forward of the recess engaged by the pin 112 so that there is never any interference during the ratcheting operation. Simultaneously with the rotation of the ratchet wheel, the turret plate rotates with shaft 80 thereby moving the next screw member 131 into position in alignment with the trip arm 138. When the ram cylinder 28 reverses movement, the pin 112 is withdrawn from the ratchet wheel whereby the pawl holds the ratchet wheel against counter-clockwise rotation by the weight 127.

This step-by-step operation for effecting a series of bends continues until the last bend is reached. It is to be understood, of course, that as each bend is completed the operator removes the finished bend from the dies and inserts therein a portion of the tubing to receive the next bend. Also, the operator rotates the tubing on its own longitudinal axis to obtain a desired circumferential spacing between bends or to effect bends in different planes.

When the last bend is reached, the striking cam 91 is moved into the position shown in Figures 5, 6 and 7. As the pin 112 is withdrawn from the tooth recess, it rides upwardly on the cam 91. This provides an additional lift of the free end 180 of the flat spring 116. As a result, the free end 180 engages the end margin of a plate 181 secured to the pawl 94 by studs 182, 182, or the like (see Figure 2). It is to be noted that the plate 181 is so positioned on the pawl as to be substantially in parallel alignment with the spring 116 when the pin 112 rides up over the corner of the cam 91. In addition, the pawl is provided with a slot 183 facing the pin 112 and extending substantially parallel to the plate 181.

As the pin 112 rides up to the top corner of the cam 91, the free end 180 of spring 116, by reason of its flexibility, snaps past the adjacent edge of the plate 181 thereby preventing the pin from riding down the forward edge of the ratchet tooth when the pin is pushed forwardly. Figure 6 illustrates the relation of parts during any overtravel to the left by the links 109 and 110. When the links again travel to the right the parts assume the positions as shown in Figure 5. Continued movement to the right effects a guiding, by the sliding of spring 116 on the plate 181, of the pin 112 into the slot 183. When the pin seats in the end of the slot, further movement of the pin results in a lifting of the pawl tooth 95 out of engagement with the ratchet. The ratchet wheel 86 is then rotated, by the weight 127 acting through the cable 125, in a counter-clockwise direction until the drum ear 124 engages the stop plate 129. The parts are then in starting position with the turret having also been rotated to place the screw members in position for controlling successive strokes of the ram cylinder in making a series of bends in a length of tubing.

It will be noted that the ratchet wheel 86 is shown as having 10 teeth. This is for purposes of illustration only as any desired number of teeth may be provided. Inasmuch as the striking cam 91 seats within one of the tooth recesses, it follows that as many bends may be accomplished as there are recesses in the ratchet wheel from the starting tooth to, but not including, the recess in which the cam seats. Consequently, any number in series of the tooth recesses of the ratchet wheel may be used to provide a plurality of bends in a length of the tubing.

Although the tube bending machine 20 is shown in vertical position, it is intended that the indexing and stroke control mechanism of this invention may be applied to a stroking device in horizontal position. The only change required thereby would be the locating of the cover tube 128 in a vertical position to permit up and down movement of the weight 127. Obviously, a spring might be substituted.

While I have shown certain preferred embodiments of my invention and described them more or less precisely as to details, it is to be understood that the invention is not to be limited thereby, as changes may be made in the arrangement and proportion of parts, and equivalents may be substituted without departing from the spirit and scope of the invention.

I claim as my invention:

1. In an indexing and control mechanism, a ratchet wheel, an axially reciprocable means, a pawl means carried by said reciprocable means and extending forwardly thereof tangentially to the ratchet wheel for engagement with the teeth thereof on each forward stroke of the reciprocable means to rotate the ratchet wheel in step by step fashion in one direction, a holding pawl pivotally mounted adjacent said ratchet wheel and engageable therewith to hold it in adjusted rotated position, a plate adjustably carried by the ratchet wheel for rotation therewith, a pin carried by said plate positionable between adjacent teeth of the ratchet wheel to connect the plate to the ratchet wheel, spring means releasably holding the pin in engagement with the ratchet wheel, and a cam portion on said plate extending radially beyond the toothed periphery of the ratchet wheel at a selected part of the periphery, said pawl means being selectively engageable with the cam portion to be moved thereby out of engagement with the ratchet wheel and into engagement with the holding pawl to move said holding pawl out of engagement with the ratchet wheel.

2. A device as claimed in claim 1, wherein gravity driven means is connected to the ratchet wheel to rotate it in the opposite direction.

3. In an indexing and control mechanism, a ratchet wheel, reciprocable pawl means mounted adjacent to the ratchet wheel for engagement with the teeth thereof to rotate the ratchet wheel in step by step fashion in one direction, a holding pawl pivotally mounted adjacent said ratchet wheel and engageable therewith to hold it in adjusted rotated position, a plate adjustably carried by the ratchet wheel for rotation therewith, a pin carried by said plate positionable between adjacent teeth of the ratchet wheel to connect the plate to the ratchet wheel, spring means releasably holding the pin in engagement with the ratchet wheel, and a cam portion on said plate extending radially beyond the toothed periphery of the ratchet wheel at a selected part of the periphery, said pawl means being selectively engageable with the cam portion to be moved thereby out of engagement with the ratchet wheel and into engagement with the holding

pawl to move said holding pawl out of engagement with the ratchet wheel.

4. In an indexing and control mechanism, a ratchet wheel, an axially reciprocable means, a pawl means carried by said reciprocable means and extending forwardly thereof for engagement with the teeth of the ratchet wheel on each forward stroke of the reciprocable means to rotate the ratchet wheel in step by step fashion in one direction, a holding pawl pivotally mounted adjacent said ratchet wheel and engageable therewith to hold it in adjusted rotated position, an adjustable plate mounted for rotation with the ratchet wheel, means on said plate selectively engageable with the ratchet wheel to connect the plate to the ratchet wheel, means releasably holding the means on the plate in engagement with the ratchet wheel, and a cam portion on said plate extending radially beyond the toothed periphery of the ratchet wheel at a selected part of the periphery, said pawl means being selectively engageable with the cam portion to be moved thereby out of engagement with the ratchet wheel and into engagement with the holding pawl to move said holding pawl out of engagement with the ratchet wheel.

5. In an indexing and control mechanism, a ratchet wheel, an axially reciprocable means, a pawl means carried by said reciprocable means and engageable with the teeth of the ratchet wheel on each forward stroke of the reciprocable means to rotate the ratchet wheel

in step by step fashion in one direction, a holding pawl pivotally mounted adjacent said ratchet wheel and engageable therewith to hold it in adjusted rotated position, a plate adjustably carried by the ratchet wheel for rotation therewith, a pin carried by said plate positionable between adjacent teeth of the ratchet wheel to connect the plate to the ratchet wheel, means releasably holding the pin in engagement with the ratchet wheel, a cam portion on said plate extending radially beyond the toothed periphery of the ratchet wheel at a selected part of the periphery, said pawl means being selectively engageable with the cam portion to be moved thereby out of engagement with the ratchet wheel, and means on said pawl means engageable with the holding pawl to guide said pawl means into engagement with the holding pawl to move said holding pawl out of engagement with the ratchet wheel.

References Cited in the file of this patent

UNITED STATES PATENTS

2,277,411	Obszarny	Mar. 24, 1942
2,543,759	Cannon	Mar. 6, 1951
2,676,572	Perry	Apr. 27, 1954
2,695,535	Carman	Nov. 30, 1954

FOREIGN PATENTS

902,701	Germany	Jan. 25, 1954