(12) INTERNATIONAL APPLICATION PUBLISHED UNDER THE PATENT COOPERATION TREATY (PCT)

(19) World Intellectual Property Organization
International Bureau

(43) International Publication Date
21 December 2023 (21.12.2023)

WIPO | PCT

(10) International Publication Number
WO 2023/242564 A1

(51) International Patent Classification:
F16L 27/10 (2006.01) *B64D 37/00* (2006.01)
B64C 3/34 (2006.01) *B64D 37/30* (2006.01)
F16L 5/00 (2006.01)

(21) International Application Number:
PCT/GB2023/051547

(22) International Filing Date:
14 June 2023 (14.06.2023)

(25) Filing Language: English

(26) Publication Language: English

(30) Priority Data:

2208699.5	14 June 2022 (14.06.2022)	GB
2208677.1	14 June 2022 (14.06.2022)	GB
2214062.8	27 September 2022 (27.09.2022)	GB

(71) Applicant: **AIRBUS OPERATIONS LIMITED** [GB/GB]; Pegasus House, Aerospace Avenue, Filton Bristol BS34 7PA (GB).

(72) Inventors: **PHILLIPS, Samuel**; c/o Airbus Operations Limited, IP Department, Pegasus House, Aerospace Avenue, Filton Bristol BS34 7PA (GB). **BRYANT, Anthony**; c/o Airbus Operations Limited, IP Department, Pegasus House, Aerospace Avenue, Filton Bristol BS34 7PA (GB).

(74) Agent: **WITHERS & ROGERS LLP** et al.; 2 London Bridge, London SE1 9RA (GB).

(81) Designated States *(unless otherwise indicated, for every kind of national protection available)*: AE, AG, AL, AM, AO, AT, AU, AZ, BA, BB, BG, BH, BN, BR, BW, BY, BZ, CA, CH, CL, CN, CO, CR, CU, CV, CZ, DE, DJ, DK, DM, DO, DZ, EC, EE, EG, ES, FI, GB, GD, GE, GH, GM, GT, HN, HR, HU, ID, IL, IN, IQ, IR, IS, IT, JM, JO, JP, KE, KG, KH, KN, KP, KR, KW, KZ, LA, LC, LK, LR, LS, LU, LY, MA, MD, MG, MK, MN, MU, MW, MX, MY, MZ, NA, NG, NI, NO, NZ, OM, PA, PE, PG, PH, PL, PT, QA, RO, RS, RU, RW, SA, SC, SD, SE, SG, SK, SL, ST, SV, SY, TH, TJ, TM, TN, TR, TT, TZ, UA, UG, US, UZ, VC, VN, WS, ZA, ZM, ZW.

(54) Title: AN AIRCRAFT ASSEMBLY

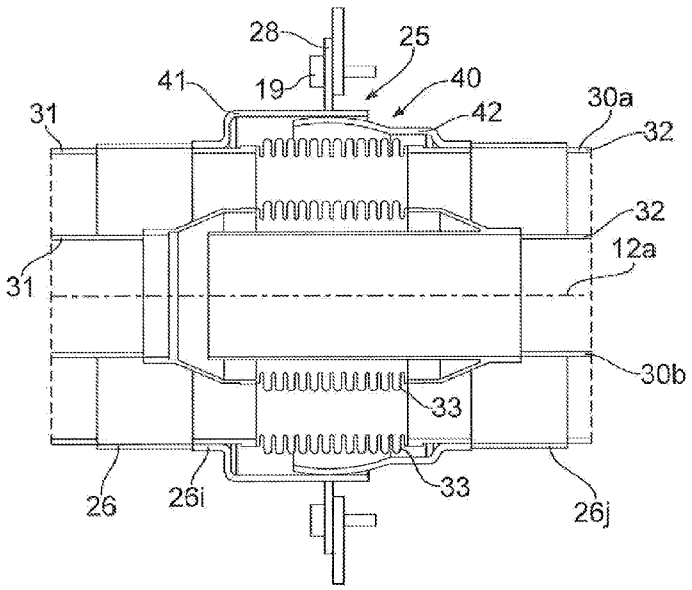

FIG. 5

(57) Abstract: An aircraft assembly comprising: a rib (10) of a wing; an aperture (11) in the rib; a pipe assembly (30a, 30b) extending through the aperture, the pipe assembly comprising a first rigid pipe section (30a), a second rigid pipe section (30b) and a flexible pipe section (33) between the first and second rigid pipe sections; and a fixture arrangement (25) that couples one of the pipe sections to the wing rib (10), wherein the flexible pipe section (33) is located at a plane of the rib and configured to allow relative movement between the first rigid pipe section and the second rigid pipe section. [Figure 5]

WO 2023/242564 A1

[Continued on next page]

(84) Designated States *(unless otherwise indicated, for every kind of regional protection available)*: ARIPO (BW, CV, GH, GM, KE, LR, LS, MW, MZ, NA, RW, SC, SD, SL, ST, SZ, TZ, UG, ZM, ZW), Eurasian (AM, AZ, BY, KG, KZ, RU, TJ, TM), European (AL, AT, BE, BG, CH, CY, CZ, DE, DK, EE, ES, FI, FR, GB, GR, HR, HU, IE, IS, IT, LT, LU, LV, MC, ME, MK, MT, NL, NO, PL, PT, RO, RS, SE, SI, SK, SM, TR), OAPI (BF, BJ, CF, CG, CI, CM, GA, GN, GQ, GW, KM, ML, MR, NE, SN, TD, TG).

Published:

— *with international search report (Art. 21(3))*

AN AIRCRAFT ASSEMBLY

FIELD OF THE INVENTION

[0001] The present invention relates to an aircraft assembly, an aircraft wing comprising the aircraft assembly, and an aircraft comprising the aircraft wing.

BACKGROUND OF THE INVENTION

[0002] There are a number of alternative fuels that are being considered to help meet future emissions targets, with one such approach being the use of hydrogen fuel. The cryogenic temperatures required for hydrogen fuels mean that the pipes are at a much lower temperature compared to the surrounding atmosphere, and this can result in significant contraction of the pipes.

[0003] Fuel pipes that extend along the aircraft wings are typically fastened to the ribs, thereby securing the pipes in position relative to the ribs. As a result, any contraction of the pipes causes loads that are transferred to the ribs. Similarly, aircraft wings bend and twist during service, such that the pipes bend and twist correspondingly. The pipes resist such movement and transfer the resulting loads into the ribs. These loads need to be accounted for when designing the ribs.

[0004] In addition, hydrogen fuel pipes typically have large thicknesses than conventional fuel pipes and this can further increase the loads transferred to the ribs.

SUMMARY OF THE INVENTION

[0005] A first aspect of the invention provides an aircraft assembly comprising: a rib of a wing; an aperture in the rib; a pipe assembly extending through the aperture, the pipe assembly comprising a first rigid pipe section, a second rigid pipe section and a flexible pipe section between the first and second rigid pipe sections; and a fixture arrangement that couples one of the pipe sections to the wing rib, wherein the flexible pipe section is located at a plane of the rib and configured to allow relative movement between the first rigid pipe section and the second rigid pipe section.

[0006] With this arrangement, relative movement between the rigid pipe sections either side of the wing rib is permitted whilst transferring substantially no load to the wing rib. Locating the flexible pipe section at the plane of the rib ensures maximum moveability of the rigid pipe sections either side.

[0007] The first rigid pipe section may be fixed relative to the rib and the second rigid pipe section moveable relative to the rib. This fixes at least a portion of the pipe assembly to the wing rib and prevents excessive axial movement of the pipe assembly.

[0008] The fixture arrangement may comprise a first joint section fixedly attached to the first rigid pipe section and a second joint section fixedly attached to the second rigid pipe section, wherein the first joint section is configured to contact the second joint section and maintain said contact during relative movement between the first rigid pipe section and the second rigid pipe section.

[0009] With this arrangement, a relatively fixed distance can be maintained between the second rigid pipe section and the rib, thereby avoiding clashing between the second rigid pipe section and the rib.

[0010] The first joint section and the second joint section may overlap at the plane of the rib. This ensures that the contact between the joint sections is at the plane of the rib, or at least proximate the plane of the rib, and thereby maximises the permittable movement of the second rigid pipe section without clashing.

[0011] The first joint section may comprise a planar profile and the second joint section may comprise a curved profile, wherein the first and second joint sections contact at a bearing surface between the planar profile and the curved profile.

[0012] With this arrangement, contact between the joint sections is minimal such that friction is reduced. The curved profile may also facilitate rotation of the second rigid pipe section relative to the rib about an axis perpendicular to the plane of the rib.

[0013] The pipe assembly may be an outer pipe assembly, and the aircraft assembly may comprise an inner pipe assembly enveloping the outer pipe assembly.

[0014] With this arrangement, a thermal barrier may be provided between the inner and outer pipe assemblies. This can be particularly beneficial for hydrogen fuels, and other fuels kept at cryogenic temperatures.

[0015] The inner pipe assembly may comprise a first rigid pipe section, a second rigid pipe section and a flexible pipe section between the first and second rigid pipe sections. The inner pipe assembly may therefore bend and twist with the outer pipe assembly.

[0016] The pipe assembly may be configured to convey hydrogen fuel. The cryogenic temperatures required for hydrogen fuels necessitate a thickening of the fuel pipes and/or contraction of the pipes that can increase the loads that may otherwise be transferred to the ribs.

[0017] The inner pipe assembly is configured to convey hydrogen fuel. This allows the space between the inner and outer pipe assemblies to act as a thermal barrier.

[0018] The hydrogen fuel may be liquid hydrogen fuel.

[0019] The hydrogen fuel may be gaseous hydrogen.

[0020] The inner pipe assembly may be spaced from the outer pipe assembly. This ensures no contact is made between the pipe assemblies, and thereby reduces heat transfer therebetween.

[0021] The space between the inner pipe assembly and the outer pipe assembly may comprise a vacuum or an inert gas.

[0022] The fixture arrangement may comprise a substantially electrically non-conductive material configured to isolate the rib from the pipe assembly. This ensures there is no metal-to-metal contact across the assembly, and thereby provides lightning strike protection. The material may be an electrically non-conductive polymer material. The polymer material may be lighter than an equivalent metal component but is typically less stiff. However, the reduced loads transferred to the rib make a polymer material suitable.

[0023] The pipe assembly may be continuous across the rib. Couplings and other arrangements not integrally formed are generally undesirable as they increase the risk of leakage. This is particularly the case for cryogenic pipes, which ideally avoid any seals between pipe sections.

[0024] The fixture arrangement may be configured to restrict movement of at least a portion of the pipe assembly in the longitudinal direction and allow rotation of the pipe

assembly relative to the rib. This can supplement the relative movement provided by the flexible pipe section.

[0025] The fixture arrangement may be configured to allow rotation of the pipe assembly, relative to the rib, about a longitudinal axis extending in the longitudinal direction. With this arrangement, the fixture arrangement reduces or mitigates loads in the pipes caused by twist of the wing.

[0026] The fixture arrangement may be configured to allow rotation of the pipe assembly, relative to the rib, about two perpendicular axes, and preferably about three perpendicular axes. This allows the fixture arrangement to reduce or mitigate further loads caused by bending and/or twisting of the wing.

[0027] The fixture arrangement and the rib may have correspondingly curved surfaces forming a bearing surface therebetween so as to allow rotation of the pipe assembly relative to the rib.

[0028] The bearing surface may be formed by a protruding portion of the fixture arrangement and a recessed portion of the rib. This is one way of providing a curved bearing surface.

[0029] Optionally the flexible pipe section comprises a bellows pipe.

[0030] Optionally the fixture arrangement comprising a spherical bearing surface which allows rotation of the one of the pipe sections relative to the rib.

[0031] Optionally the fixture arrangement comprises a ball-and-socket joint.

[0032] Optionally the ball-and-socket joint comprises a ball in a socket, and the one of the pipe sections is coupled to the ball.

[0033] A second aspect of the invention provides an aircraft wing comprising the aircraft assembly of the first aspect.

[0034] The aircraft wing may comprise a plurality of aircraft assemblies according to the first aspect.

[0035] A third aspect of the invention provides an aircraft comprising the aircraft wing of the second aspect.

[0036] A fourth aspect of the invention provides an aircraft assembly comprising: an aircraft structure; a pipe assembly comprising a first rigid pipe section, a second rigid pipe section and a flexible pipe section extending between the first and second rigid pipe sections, wherein the flexible pipe section is configured to allow relative movement between the first rigid pipe section and the second rigid pipe section; and a fixture arrangement that couples the first rigid pipe section to the aircraft structure, the fixture arrangement comprising a spherical bearing surface which allows rotation of the first rigid pipe section relative to the aircraft structure.

[0037] Optionally the flexible pipe section is configured to allow relative translation between the first rigid pipe section and the second rigid pipe section in an axial direction, wherein the axial direction is parallel with a longitudinal axis of the first or second rigid pipe section.

[0038] Optionally the assembly is configured to allow relative rotation between the first rigid pipe section and the second rigid pipe section about a transverse axis, wherein the transverse axis is perpendicular to a longitudinal axis of the first rigid pipe section.

[0039] Optionally the fixture arrangement comprises a ball-and-socket joint.

[0040] Optionally the ball-and-socket joint comprises a ball in a socket, and the first rigid pipe section is coupled to the ball.

[0041] Optionally the aircraft assembly further comprises a first joint section fixedly attached to the first rigid pipe section and a second joint section fixedly attached to the second rigid pipe section, wherein the first joint section is configured to contact the second joint section and maintain said contact during relative movement between the first rigid pipe section and the second rigid pipe section.

[0042] Optionally the aircraft assembly further comprises a first clevis which couples the first rigid pipe section to the fixture arrangement and allows rotation of the first rigid pipe section relative to the fixture arrangement about a first gimble axis; and a second clevis which couples the second rigid pipe section to the fixture arrangement and allows rotation of the second rigid pipe section relative to the fixture arrangement about a second gimble axis, wherein the second gimbal axis is perpendicular to the first gimbal axis.

[0043] Optionally the fixture arrangement comprises a ball-and-socket joint; the ball-and-socket joint comprises a ball in a socket; the first clevis couples the first rigid pipe section to the ball; and the second clevis couples the second rigid pipe section to the ball.

[0044] Optionally the flexible pipe section comprises a bellows pipe.

[0045] A fifth aspect of the invention provides an aircraft wing comprising the aircraft assembly of the fourth aspect.

[0046] A sixth aspect of the invention provides an aircraft comprising the aircraft wing of the fifth aspect.

[0047] Features of any of the various aspects of the invention may be combined.

BRIEF DESCRIPTION OF THE DRAWINGS

[0048] Embodiments of the invention will now be described with reference to the accompanying drawings, in which:

[0049] Figure 1 shows an aircraft;

[0050] Figure 2 is a sectional view of a wing box of the starboard wing;

[0051] Figure 3 shows the wing box extending along a wing;

[0052] Figure 4 shows a rib;

[0053] Figure 5 shows a first example of an aircraft assembly;

[0054] Figure 6 shows a detailed view of a spacing arrangement of the first example;

[0055] Figure 7 shows a perspective view of the first example;

[0056] Figure 8 shows a second example of an aircraft assembly;

[0057] Figure 9 shows a cross-section of the aircraft assembly of the second example;

[0058] Figure 10 shows a detailed view of the aircraft assembly of the second example shown in Figure 9;

[0059] Figure 11 shows a third example of an aircraft assembly;

[0060] Figure 12 shows a cross-section of the aircraft assembly of the third example;

[0061] Figure 13 shows a first example of a fuel pipe extending through a series of ribs of an aircraft wing;

[0062] Figure 14 shows a second example of a fuel pipe extending through a series of ribs of an aircraft wing;

[0063] Figure 15 shows a cross-section view of a further example of an aircraft assembly, viewed from a side;

[0064] Figure 16 shows the assembly of Figure 15 with certain parts removed, viewed from the same side as Figure 15;

[0065] Figure 17 is an isometric view of certain parts of the assembly of Figure 15;

[0066] Figure 18 shows the assembly of Figure 15 with certain parts removed, viewed from above; and

[0067] Figure 19 is an isometric view of certain parts of the assembly of Figure 15.

DETAILED DESCRIPTION OF EMBODIMENT(S)

[0068] Figure 1 shows an aircraft 1 with port and starboard wings 2, 3. Each wing has a cantilevered structure with a length extending in a generally spanwise direction 42 from a root to a tip (shown in Figure 3), the root being joined to an aircraft fuselage 4. The wings 2, 3 are similar in construction so only the starboard wing 3 will be described in detail with reference to Figures 2 and 3.

[0069] The main structural element of the wing 3 is a wing box 20 that may be formed by upper and lower covers 21, 22 and front and rear spars 6, 7 shown in cross-section in Figure 2. The covers 21, 22 and spars 6, 7 may each be formed of Carbon Fibre Reinforced Polymer (CFRP) laminate components. Each cover 21, 22 comprises a panel assembly and may have a curved aerodynamic outer surface (e.g. the upper surface of the upper cover 21 and the lower surface of the lower cover 22) over which air flows during flight of the aircraft 1. Each cover 21, 22 has an inner surface carrying a series of stiffeners 8 extending in the spanwise direction 42 (only some of the stiffeners 8 are labelled so as to improve the clarity of the figures). Each stiffener 8 is joined to one cover 21, 22 but not the other.

[0070] It will be understood that any number of stiffeners 8 may be applied across the chord of the wing 3, although only five are shown coupled to each cover 21, 22 in Figures 2 and 3 for the purposes of clarity.

[0071] The wing box 20 may have a plurality of transverse ribs, each rib being joined to the covers 21, 22 and the spars 6, 7. The ribs 10 may include an inner-most inboard rib 10a located at the root of the wing box 20, an outer-most rib 10c at the tip of the wing box 20, and one or more mid-span ribs 10b between the inner-most and outer-most ribs 10a, 10c. The inner-most rib 10a may be an attachment rib which forms the root of the wing box 20 and is joined to a centre wing box 18 within the body of the fuselage 4. Each rib 10a, 10b, 10c may connect the upper cover 21 to the lower cover 22. The stiffeners 8 may pass through rib recesses (not shown) in the ribs 10b.

[0072] An aperture 11 is formed in one or more of the ribs 10, such as shown in Figure 4. A pipe assembly 30a, 30b extends through the aperture 11 so that a longitudinal axis 12a of the pipe assembly 30a, 30b extends through the aperture 11. The pipe assembly 30a, 30b comprises a first rigid pipe section 31 and a second rigid pipe section 32 extending either side of a plane the rib 10. The example shown in Figures 5 and 6 comprises an outer pipe assembly 30a enveloping an inner pipe assembly 30b, although it will be appreciated there may be a single pipe assembly 30a, 30b (i.e. single walled) in alternative examples (such as the further example of Figures 15-19, described below).

[0073] The first and second rigid pipe sections 31, 32 may comprise or be formed of metal e.g. stainless steel. The first and second rigid pipe sections 31, 32 may have a constant thickness and diameter.

[0074] A flexible pipe section 33 extends between the first rigid pipe section 31 and second rigid pipe section 32 of each pipe assembly 30a, 30b, with each flexible pipe section 33 located at the plane of the rib 10 such that at least a portion of each flexible pipe section 33 extends either side of the plane of the rib 10. By ensuring the flexible pipe section 33 is located at the plane of the rib 10, any relative bending of the second pipe section 32 with respect to the first pipe section 31 occurs either side of the plane of the rib 10.

[0075] The flexible pipe section 33 may be a bellows pipe or other suitable arrangement for absorbing movements in the pipe assembly 30a, 30b.

[0076] The flexible pipe section 33 of the outer pipe assembly 30a may be integrally formed with the respective first and second rigid pipe sections 31, 32 of the outer pipe assembly 30a. The flexible pipe section 33 of the inner pipe assembly 30b may be integrally formed with the respective first and second rigid pipe sections 31, 32 of the inner pipe assembly 30b. In other words, the outer and inner pipe assemblies 30a, 30b may be continuous across the rib 10 and absent of any disassemblable couplings.

[0077] The flexible pipe section 33 may be formed of metal, e.g. stainless steel. The flexible pipe section 33 may be welded to the respective first and second rigid pipe sections 31, 32. The flexible pipe section 33 may be a bellows arrangement comprising a series of undulations, such as shown in Figure 5. The undulations may have a constant wall thickness. Alternatively, the flexible pipe 33 may be a braided pipe arrangement.

[0078] Each flexible pipe section 33 facilitates relative moment between the respective first and second rigid pipe sections 31, 32 to which they connect. The movement may be axial and/or rotational. In this manner, load transfer between the outer pipe assembly 30a and the rib 10 is reduced. For instance, if the outer pipe assembly 30a comprised a continuous rigid pipe section (not shown), the loads on the outer pipe assembly 30a caused by twisting and/or bending of the wing 3 could be transferred from the outer pipe assembly 30a to the rib 10, and thereby require additional strengthening of the rib 10. In addition, in double walled pipes having outer and inner pipe assemblies 30a, 30b, if the outer pipe assembly 30a comprises a flexible pipe section 33 and the inner pipe assembly 30b comprises a continuous rigid pipe section (not shown), the inner pipe assembly 30b would be resistant to bending and thereby clash with the outer pipe assembly 30a so as to transfer undesirable load to the rib 10.

[0079] In the present arrangement, the load transfer is reduced or mitigated by the flexible pipe section 33 providing for relative movement between the first and second rigid pipe sections 31, 32.

[0080] One of the pipe sections 31, 32, 33 of the outer pipe assembly 30a is fixed axially relative to the rib 10 by a fixture arrangement 25, so as to prevent unintended movement of the pipe assembly 30a along the wing box 20. In particular, the fixture arrangement 25 may comprise a sleeve 26 fixedly attached to an outer surface of the outer pipe assembly 30a. The sleeve 26 of the fixture arrangement 25 extends across at least a

portion of the pipe assembly 30a, so as to overlap a portion of each of the first and second rigid pipe sections 31, 32. The fixture arrangement 25 may be located at a plane of the rib 10.

[0081] The fixture arrangement 25 may comprise a substantially electrically non-conductive material, e.g. the material may be a non-conductive polymer material. This helps to isolate the pipe assembly 30a, 30b from the rib 10 so that no metal-to-metal contact is formed. This helps to mitigate the effects of lightning strikes.

[0082] In the example shown in Figures 5 to 7, the first rigid pipe section 31 of the outer pipe assembly 30a is fixed relative to the rib 10 and the second rigid pipe section 32 and flexible pipe section 33 of the outer pipe assembly 30a are moveable relative to the rib 10. Alternatively, the second rigid pipe section 32 or flexible pipe section 33 of the outer pipe assembly 30a may be fixed relative to the rib 10.

[0083] To accommodate the relative movement between the rigid pipe sections 31, 32, the sleeve 26 may be formed of a first sleeve portion 26i and a second sleeve portion 26j.

[0084] To fix one of the pipe sections 31, 32, 33 of the outer pipe assembly 30a to the rib 10, the fixture arrangement 25 comprises a flange 28 that is fixed to the rib 10 with one or more fasteners 19. It will be appreciated that the rib 10 may be integrally formed with the fixture arrangement 25.

[0085] To ensure that the outer pipe assembly 30a maintains a substantially fixed distance from the rib 10, and thereby avoid impact against the rib 10 and in particular the aperture 11 of the rib 10, the fixture arrangement 25 may comprise a spacing arrangement 40. An example of such a spacing arrangement 40 is shown in Figures 5 and 6.

[0086] The spacing arrangement 40 may comprise a first joint section 41 fixedly attached to the first rigid pipe section 31 of the outer pipe assembly 30a and a second joint section 42 fixedly attached to the second rigid pipe section 32 of the outer pipe assembly 30a (e.g. via the sleeve portions 26i, 26j). The first joint section 41 and the second joint section 42 overlap at the plane of the rib 10. The first joint section 41 is configured to contact the second joint section 42 and maintain the contact between the first and second joint sections 41, 42 during relative movement between the first rigid

pipe section 31 and the second rigid pipe section 32 (e.g. axial movement and/or rotational movement).

[0087] Figure 6 shows a close-up view of the spacing arrangement 40, in which the first joint section 41 includes a straight profile 41a when viewed in cross-section as in Figure 6, and the second joint section 42 includes a curved (spherical) profile 42a, when viewed in cross-section as in Figure 6, which contacts the straight profile 41a of the first joint section 41. A bearing surface is defined between the first and second joint sections 41, 42 such that relative axial and/or rotational movement between the first and second rigid pipe sections 31, 32 is facilitated whilst maintaining a clearance distance between the second rigid pipe section 32 of the outer pipe assembly 30a and the fixture arrangement 25.

[0088] As the curved profile 42a of the second joint section 42 contacts a straight profile 41a of the first joint section 41, the second joint section 42 is able to facilitate rotation of the second rigid pipe section 32 relative to the first rigid pipe section 31 whilst preventing a clash between the second rigid pipe section 32 and the fixture arrangement 25.

[0089] In some examples, the fixture arrangement 25 may be arranged such that the outer pipe assembly 30a is rotatably coupled to the rib 10 by the fixture arrangement 25, such as shown in Figure 8. In particular, the outer pipe assembly 30a is fixed axially substantially at the plane of the rib 10 but may rotate about at least one axis.

[0090] The sleeve 26 may comprise a protruding portion 26a, with the protruding portion 26a arranged to rotatably couple to a correspondingly recessed portion 27 of the fixture arrangement 25. Alternatively, the sleeve 26 may comprise a recessed portion 27 corresponding to a protruding portion 26a of the fixture arrangement 25. The protruding portion 26a and the recessed portion 27 have corresponding curved profiles.

[0091] In the case of Figures 8-10 the fixture arrangement comprises a ball-and-socket joint, the ball-and-socket joint comprising a ball (protruding portion 26a) and a socket fitting 27).

[0092] The socket fitting 27 comprises a concave spherical bearing surface which forms a socket. The ball 26a comprises a convex spherical bearing surface which is received in the socket, engaging the concave spherical bearing surface.

[0093] The fixture arrangement 25 restricts movement of the outer pipe assembly 30a in the longitudinal direction relative to the rib 10 and allows rotation of the outer pipe assembly 30a relative to the rib 10. In particular, the protruding portion 26a and the corresponding recessed portion 27 may have correspondingly spherically curved bearing surfaces forming a spherical bearing therebetween to allow rotation of the pipe assembly 30a relative to the rib 10. A spherical bearing between the protruding portion 26a and the recessed portion 27, for example as shown in Figure 8, allows rotation of the pipe assemblies 30a, 30b relative to the rib 10 about three perpendicular axes 12a, 12b, 12c. The spherical bearing surfaces can slide relative to each other to allow this rotation of the pipe assembly. Rotation of the pipe assembly 30a via the above-mentioned bearing surface between the protruding portion 26a and the recessed portion 27 may supplement the clearance distance between the second rigid pipe section 32 of the outer pipe assembly 30a and the fixture arrangement 25 provided for by the spacing arrangement 40.

[0094] As well as enabling rotation of the pipe assembly, the spherical bearing surfaces also perform the function of restricting movement of the pipe assembly in the longitudinal direction relative to the rib 10, due to their spherical shape. Thus the protruding portion 26a acts as a stop member configured to engage with the fixture arrangement 25 to restrict movement of the pipe assembly 30a, 30b in the longitudinal direction relative to the wing structure. More specifically, the right-hand side of the protruding portion 26a acts as a first stop feature configured to engage with a first part of the fixture arrangement (the right-hand side of the recess 27) to restrict movement of the pipe assembly to the right, in the view of Figure 6. Similarly the left-hand side of the protruding portion 26a acts as a second stop feature configured to engage with a second part of the fixture arrangement (the left-hand side of the recess 27) to restrict movement of the pipe assembly to the left.

[0095] Depending on the fit between the bearing surfaces, a certain amount of play may be permitted in the longitudinal direction. The fixture arrangement 25 may be configured to restrict movement of at least a portion of the pipe assembly in the longitudinal direction relative to the wing structure with play no greater than 10mm, or with play no greater than 5mm, or with play no greater than 2mm, or with play no greater than 1mm.

[0096] The rotation of the pipe assemblies 30a, 30b, relative to the rib 10, allows loads acting on the wing 3 to be accounted for. In particular, bending of the wing 3 may cause the outer pipe assembly 30a to clash with the edge of the aperture 11 if the distance of the outer pipe assembly 30a from the edge of the aperture 11 is not maintained by the fixture arrangement 25. If the pipe assembly were fixed to the rib 10, twisting and/or bending of the wing 3 could cause significant loads to be transferred from the pipe assembly 30a to the rib 10, and thereby require additional strengthening of the rib 10.

[0097] By permitting rotation of the pipe assembly 30a about the longitudinal axis 12a of the pipe assembly 30a and/or about one or more of the perpendicular axes 12b, 12c in a plane of the rib 10, the loads transferred from the pipe assembly 30a due to twisting and/or bending of the wing 3 are reduced or mitigated.

[0098] Meanwhile, by restricting movement of the pipe assembly 30a along its longitudinal axis 12a, the pipe assembly 30a is prevented from sliding freely through the wing box 20.

[0099] The outer and inner pipe assemblies 30a, 30b may be configured to convey a fuel, for example a petroleum based fuel such as kerosene, or a hydrogen fuel. Whilst it will be appreciated that the assembly may comprise a single pipe assembly 30a, 30b, it is particularly advantageous to provide a double-walled pipe arrangement with an outer pipe assembly 30a and an inner pipe assembly 30b when conveying cryogenic fuels, such as hydrogen.

[0100] In particular, the inner pipe assembly 30b may be configured to convey hydrogen fuel, with a space defined between the outer pipe assembly 30a and the inner pipe assembly 30b that provides a thermal barrier between the hydrogen fuel and the temperature in the wing box 20, thereby reducing heat transfer to maintain the low temperature of the hydrogen fuel.

[0101] The cryogenic temperatures required for the storage of hydrogen fuels, in contrast to the temperature of the surrounding wing box 20, may give rise to additional loads that act on the outer and inner pipe assemblies 30a, 30b that can be reduced or mitigated by the fixture arrangement 25. In particular, the cryogenic temperatures may cause the pipe assemblies 30a, 30b to contract. If the pipe assemblies 30a, 30b were

fixed to the rib 10, these loads could be transferred to the rib 10, and thereby necessitate additional reinforcement of the rib 10.

[0102] The hydrogen fuel may be a gaseous hydrogen fuel or a liquid hydrogen fuel. In examples in which the hydrogen fuel is a gaseous hydrogen fuel, the space between the outer pipe assembly 30a and the inner pipe assembly 30b may comprise an inert gas such as nitrogen gas. The inert gas may have a high concentration (e.g. 98% or 99%) so as to prevent any reaction of the gaseous hydrogen with oxygen. In examples in which the hydrogen fuel is a liquid hydrogen fuel, the space between the outer pipe assembly 30a and the inner pipe assembly 30b may comprise a vacuum. The vacuum reduces heat transfer between the inner and outer pipe assemblies 30a, 30b.

[0103] The protruding portion 26a may be solid, or thermal insulation between the outer pipe assembly 30a and the rib 10 may be further enhanced by making the protruding portion 26a hollow.

[0104] In the example shown in Figure 8, the flanges 28 each extend around a half-circumference of the aperture 11, so as to envelope the pipe assemblies 30a, 30b, and are joined by fasteners 19a. However, it will be appreciated that the flanges 28 may be of any suitable configuration. In the example shown in Figure 7, a single flange 28 extends around the full circumference of the pipe assemblies 30a, 30b. In some examples, the flange(s) may extend around only a portion of the circumference of the pipe assemblies 30a, 30b.

[0105] As shown in Figure 8, the flanges 28 may be located on a single side of the rib 10, with the recessed portion 27 of the fixture arrangement 25 integrally formed. In alternative examples, a flange may be attached on both sides of the rib 10, so that the recessed portion 27 is formed of two or more sections.

[0106] Figures 9 and 10 show an example in which the fixture arrangement 25 comprises a protruding portion 26a configured to engage a recessed portion 27, as well as a spacing arrangement 40. As will be appreciated, rotation of the pipe assembly 30a via the bearing surface between the protruding portion 26a and the recessed portion 27 may supplement movement provided by the flexible portions 33 of the pipe assemblies 30a, 30b, as well as the clearance distance achieved by the spacing arrangement 40.

[0107]

[0108] Whilst the examples shown in Figures 5 to 10 provide for rotation of the pipe assemblies 30a, 30b about three perpendicular axes 12a, 12b, 12c, it will be appreciated that other examples may provide rotation about one or two perpendicular axes 12a, 12b, 12c.

[0109] Figures 11 and 12 show an example in which the sleeve 26 has a cylindrically shaped protruding portion 26a, with the recessed portion 27 having a corresponding profile such that the outer pipe assembly 30a may rotate about the longitudinal axis 12a of the pipe assembly 30a, but substantially prevents rotation about the transverse axes 12b, 12c parallel to the plane of the rib 10. This allows the loads due to twisting of the wing 3, which may otherwise transfer to the pipe assembly 30a, to be reduced or mitigated.

[0110] The bearing surfaces in Figure 11 and 12 each have a generally cylindrical shape which allows rotation of the pipe assembly relative to the rib about the longitudinal axis 12a extending in the longitudinal direction. The generally cylindrical shape of the bearing surfaces also restricts rotation of the pipe assembly relative to the rib about two perpendicular axes 12b, 12c, wherein the two perpendicular axes are perpendicular to each other and perpendicular to the longitudinal axis 12a.

[0111] As in the embodiments of Figure 9 and 10 (with a spherical bearing) the bearing surfaces in Figures 11 and 12 are also shaped to provide stop features which restrict movement of at least a portion of the pipe assembly in the longitudinal direction relative to the rib 10.

[0112] In this example, it will be appreciated that the flexible portion 33 still allows some relative movement between the first rigid pipe section 31 and the second rigid pipe section 32.

[0113] The wing 3 may comprise a plurality of ribs 10a, 10b, 10c within the wing box 20, such as shown in Figure 3. Each rib may comprise a corresponding flexible pipe section 33 located at a plane of the rib 10b, with first and second pipe sections 31, 32 extending either side of the plane of the rib 10b. Figure 13 shows an example in which a flexible pipe section 33 is located at each rib 10 in the wing box 20. Similarly, a fixture arrangement 25 may be located at each rib 10.

[0114] In some examples, it may not be necessary to provide a flexible pipe section 33 at each rib 10. For example, the size of the aperture 11 and the expected loading on the pipe assemblies 30a, 30b may be such that a flexible pipe section 33 may be located at the plane of a first set of ribs 10i, whilst a second set of ribs 10j are absent a flexible pipe section 33 at the plane of each rib 10. At least some ribs 10 of the second set of ribs 10j may be located between ribs 10 of the first set of ribs 10i, such as shown in Figure 14. Similarly, a fixture arrangement 25 may be located at the plane of the first set of ribs 10i and not the second set of ribs 10j.

[0115] An aircraft assembly shown in Figure 15 comprises: an aircraft structure 50; and a pipe assembly coupled to the aircraft structure 50. The aircraft structure 50 may be a wing rib, a fuselage frame, or any other aircraft structure.

[0116] The pipe assembly comprises a first rigid pipe section 51, a second rigid pipe section 52 and a flexible pipe section 53 (in this case a bellows) extending between the first and second rigid pipe sections. The flexible pipe section 53 is configured to allow relative movement between the first rigid pipe section 51 and the second rigid pipe section 52.

[0117] Unlike the previous examples, the pipe assembly of Figure 15 is singled-walled rather than double-walled. In other embodiments, the pipe assembly of Figure 15 may be replaced by a double-walled pipe arrangement as in the previous embodiments.

[0118] A fixture arrangement 54 couples the pipe assembly 51, 52, 53 to the aircraft structure 50. The fixture arrangement 54 comprises a ball-and-socket joint, the ball-and-socket joint comprising a ball 55 and a socket fitting 56. The socket fitting 56 comprises a flange 59 which is attached to the aircraft structure 50 by fasteners (not shown).

[0119] The socket fitting 56 comprises a concave spherical bearing surface 57 which forms a socket. The ball 55 comprises a convex spherical bearing surface 58 which is received in the socket, engaging the concave spherical bearing surface 57. The ball 55 forms a continuous ring around the pipe assembly, as shown in Figure 17.

[0120] The rigid pipe sections 51, 52 are coupled to the ball 55 by a gimble joint arrangement comprising a first clevis 60 shown most clearly from the side as in Figure 16, and an identical second clevis 70 shown most clearly from above as in Figure 18.

[0121] Figures 15 and 16 are cross-sectional side views showing the first clevis 60, which couples the first rigid pipe section 51 to the ball 55. The first clevis 60 comprises a pair of clevis arms 63, 64 with pins 65, 66 on a vertical first gimble axis 61 which each form a respective rotary joint with the ball 55 as shown in Figure 15. The rotary joints allow rotation of the first rigid pipe 51 section relative to the ball 55 about the vertical first gimble axis 61. As shown in Figure 16, the first gimbal axis 61 is perpendicular to a longitudinal axis 62 of the first rigid pipe section 51.

[0122] Figure 18 is a view from above showing the second clevis 70, which couples the second rigid pipe section 52 to the ball 55. The second clevis 70 comprises a pair of clevis arms 73, 74 with pins 75, 76 on a horizontal second gimble axis 71 which each form a respective rotary joint with the ball 55. These rotary joints are not visible in Figure 15 since they lie out of the plane of the cross-section, but they are identical to the rotary joints with the first clevis 60 shown in Figure 15. The rotary joints allow rotation of the second rigid pipe 52 section relative to the ball 55 about the second gimble axis 71. The second gimbal axis 71 is perpendicular to a longitudinal axis 72 of the second rigid pipe section 52, and also perpendicular to the first gimble axis 61.

[0123] The gimble joint arrangement allows each rigid pipe section to rotate relative to the other pipe section about a respective gimble axis 61, 71. The bellows pipe 53 is configured to allow this relative rotation between the first rigid pipe section 51 and the second rigid pipe section 52.

[0124] The embodiments of Figure 9 and Figure 15 will now be compared and contrasted. Both embodiments provide a certain degree of freedom of the rigid pipe sections relative to the aircraft structure, avoiding bending moments from the rigid pipe sections acting on the aircraft structure.

[0125] In the embodiment of Figure 9, the sliding joint between the first joint section 41 and the second joint section 42, in combination with the bellows 33, allows axial translation of the second rigid pipe section 32 relative to the first rigid pipe section 31. In the embodiment of Figure 15, the gimble joint arrangement prevents such relative axial translation of the second rigid pipe section 52. This feature of the gimble joint arrangement may be beneficial, in that it avoids collapse or over-extension of the

bellows 53. The gimble joint arrangement also has high durability when resisting axial inertia and vibration.

[0126] In both the embodiments of Figure 9 and Figure 15, the bellows pipe may be sufficiently rigid to substantially prevent either rigid pipe section rotating relative to the other rigid pipe section about its longitudinal axis (i.e. relative "twist" between the rigid pipe sections).

[0127] In both the embodiments of Figure 9 and Figure 15, the ball-and-socket joint allows rotation of both the first and second rigid pipe sections relative to the aircraft structure about three orthogonal axes. This may avoid twist loading (for instance arising from wing twist) acting on the pipework.

[0128] In the embodiment of Figure 9, the spherical profile of the second joint section 42 allows the second rigid pipe section 32 to rotate relative to the first rigid pipe section 31 about a pair of transverse axes, orthogonal to the longitudinal axis of the second rigid pipe section 32. In the embodiment of Figure 15, the gimble joint arrangement restricts such relative rotation to the two gimble axes. On the other hand, the gimble joint arrangement of Figure 15 enables rotation of both rigid pipe sections relative to the ball (in Figure 9 the first rigid pipe section 31 is fixed to the ball).

[0129] In both the embodiments of Figure 9 and Figure 15, so-called "snaking" of the bellows is avoided, whilst also permitting a relative rotation between the rigid joint sections. Snaking occurs when one of the rigid pipe sections translates relative to the other rigid joint section, transverse to its longitudinal axis and without rotating. This results in a misalignment of the longitudinal axes of the rigid pipe sections and is ideally avoided.

[0130] In the embodiments of the invention described above, the pipe assembly extends through an aperture of an aircraft structure, such as a rib of a wing or a fuselage frame, and the flexible pipe section is located at a plane of the aircraft structure. In other embodiments of the invention, the pipe assembly may not extend through an aperture of the aircraft structure, and/or may not be located at a plane of the aircraft structure. For example the pipe assembly may extend along a length of a wing spar or wing stringer, and a fixture arrangement similar to any of the fixture arrangements described above may couple the pipe assembly to the wing spar or wing stringer.

[0131] Where the word 'or' appears this is to be construed to mean 'and/or' such that items referred to are not necessarily mutually exclusive and may be used in any appropriate combination.

[0132] Although the invention has been described above with reference to one or more preferred embodiments, it will be appreciated that various changes or modifications may be made without departing from the scope of the invention as defined in the appended claims.

CLAIMS

1. An aircraft assembly comprising:

   a rib of a wing;

   an aperture in the rib;

   a pipe assembly extending through the aperture, the pipe assembly comprising a first rigid pipe section, a second rigid pipe section and a flexible pipe section between the first and second rigid pipe sections; and

   a fixture arrangement that couples one of the pipe sections to the rib, wherein the flexible pipe section is located at a plane of the rib and configured to allow relative movement between the first rigid pipe section and the second rigid pipe section.

2. The aircraft assembly of claim 1, wherein the first rigid pipe section is configured to be fixed relative to the rib and the second rigid pipe section is configured to be moveable relative to the rib.

3. The aircraft assembly of claim 1 or 2, wherein the fixture arrangement comprises a first joint section fixedly attached to the first rigid pipe section and a second joint section fixedly attached to the second rigid pipe section, and wherein the first joint section is configured to contact the second joint section and maintain said contact during relative movement between the first rigid pipe section and the second rigid pipe section.

4. The aircraft assembly of claim 3, wherein the first joint section and the second joint section overlap at the plane of the rib.

5. The aircraft assembly of claim 3 or 4, wherein the first joint section comprises a planar profile and the second joint section comprises a curved profile, wherein the first and second joint sections contact at a bearing surface between the planar profile and the curved profile.

6. The aircraft assembly of any preceding claim, wherein the pipe assembly is an outer pipe assembly, and the aircraft assembly comprises an inner pipe assembly enveloping the outer pipe assembly.

7. The aircraft assembly of claim 6, wherein the inner pipe assembly comprising a first rigid pipe section, a second rigid pipe section and a flexible pipe section between the first and second rigid pipe sections.

8. The aircraft assembly of any preceding claim, wherein the pipe assembly is configured to convey hydrogen fuel.

9. The aircraft assembly of claim 8 when dependent on claim 6 or 7, wherein the inner pipe assembly is configured to convey hydrogen fuel.

10. The aircraft assembly of claim 8 or 9, wherein the hydrogen fuel is liquid hydrogen fuel.

11. The aircraft assembly of claim 8 or 9, wherein the hydrogen fuel is gaseous hydrogen.

12. The aircraft assembly of any preceding claim when dependent on claim 6, wherein the inner pipe assembly is spaced from the outer pipe assembly.

13. The aircraft assembly of claim 12, wherein the space between the inner pipe assembly and the outer pipe assembly comprises a vacuum or an inert gas.

14. The aircraft assembly of any preceding claim, wherein the fixture arrangement comprises a substantially electrically non-conductive material configured to isolate the rib from the pipe assembly, and preferably wherein the material is a polymer material.

15. The aircraft assembly of any preceding claim, wherein the pipe assembly is continuous across the rib.

16. The aircraft assembly of any preceding claim, wherein the fixture arrangement is configured to restrict movement of at least a portion of the pipe assembly in a longitudinal direction of the pipe assembly and allow rotation of the pipe assembly relative to the rib.

17. The aircraft assembly of claim 14, wherein the fixture arrangement is configured to allow rotation of the pipe assembly, relative to the rib, about a longitudinal axis extending in the longitudinal direction.

18. The aircraft assembly of claim 16 or 17, wherein the fixture arrangement is configured to allow rotation of the pipe assembly, relative to the rib, about two perpendicular axes, and preferably about three perpendicular axes.

19. The aircraft assembly of any one of claims 16 to 18, wherein the fixture arrangement and the rib have correspondingly curved surfaces forming a bearing surface therebetween so as to allow rotation of the pipe assembly relative to the rib.

20. The aircraft assembly of claim 19, wherein the bearing surface is formed by a protruding portion of the fixture arrangement and a recessed portion of the rib.

21. The aircraft assembly of any preceding claim, wherein the flexible pipe section comprises a bellows pipe.

22. The aircraft assembly of any preceding claim, wherein the fixture arrangement comprising a spherical bearing surface which allows rotation of the one of the pipe sections relative to the rib.

23. The aircraft assembly of claim 22, wherein the fixture arrangement comprises a ball-and-socket joint.

24. The aircraft assembly of claim 23, wherein the ball-and-socket joint comprises a ball in a socket, and the one of the pipe sections is coupled to the ball.

25. An aircraft wing comprising the aircraft assembly of any preceding claim.

26. The aircraft wing of claim 25, comprising a plurality of aircraft assemblies according to any one of claims 1 to 25.

27. An aircraft comprising the aircraft wing of claim 25 or 26.

28. An aircraft assembly comprising:

an aircraft structure;

a pipe assembly comprising a first rigid pipe section, a second rigid pipe section and a flexible pipe section extending between the first and second rigid pipe sections, wherein the flexible pipe section is configured to allow relative movement between the first rigid pipe section and the second rigid pipe section; and

a fixture arrangement that couples the first rigid pipe section to the aircraft structure, the fixture arrangement comprising a spherical bearing surface which allows rotation of the first rigid pipe section relative to the aircraft structure.

29. The aircraft assembly of claim 28, wherein the flexible pipe section is configured to allow relative translation between the first rigid pipe section and the second rigid pipe section in an axial direction, wherein the axial direction is parallel with a longitudinal axis of the first or second rigid pipe section.

30. The aircraft assembly of claim 29 or 30, wherein the assembly is configured to allow relative rotation between the first rigid pipe section and the second rigid pipe section about a transverse axis, wherein the transverse axis is perpendicular to a longitudinal axis of the first rigid pipe section.

31. The aircraft assembly of any of claims 28 to 30, wherein the fixture arrangement comprises a ball-and-socket joint.

32. The aircraft assembly of claim 31, wherein the ball-and-socket joint comprises a ball in a socket, and the first rigid pipe section is coupled to the ball.

33. The aircraft assembly of any of claims 28 to 32, further comprising a first joint section fixedly attached to the first rigid pipe section and a second joint section fixedly attached to the second rigid pipe section, wherein the first joint section is configured to contact the second joint section and maintain said contact during relative movement between the first rigid pipe section and the second rigid pipe section.

34. The aircraft assembly of any of claims 28 to 33, further comprising a first clevis which couples the first rigid pipe section to the fixture arrangement and allows rotation of the first rigid pipe section relative to the fixture arrangement about a first gimble axis; and a second clevis which couples the second rigid pipe section to the fixture arrangement and allows rotation of the second rigid pipe section relative to the fixture arrangement about a second gimble axis, wherein the second gimbal axis is perpendicular to the first gimbal axis.

35. The aircraft assembly of claim 34, wherein the fixture arrangement comprises a ball-and-socket joint; the ball-and-socket joint comprises a ball in a socket; the first clevis

couples the first rigid pipe section to the ball; and the second clevis couples the second rigid pipe section to the ball.

36. The aircraft assembly of any of claims 28 to 35, wherein the flexible pipe section comprises a bellows pipe.

37. An aircraft wing comprising the aircraft assembly of any of claims 28 to 36.

38. An aircraft comprising the aircraft wing of claim 37.

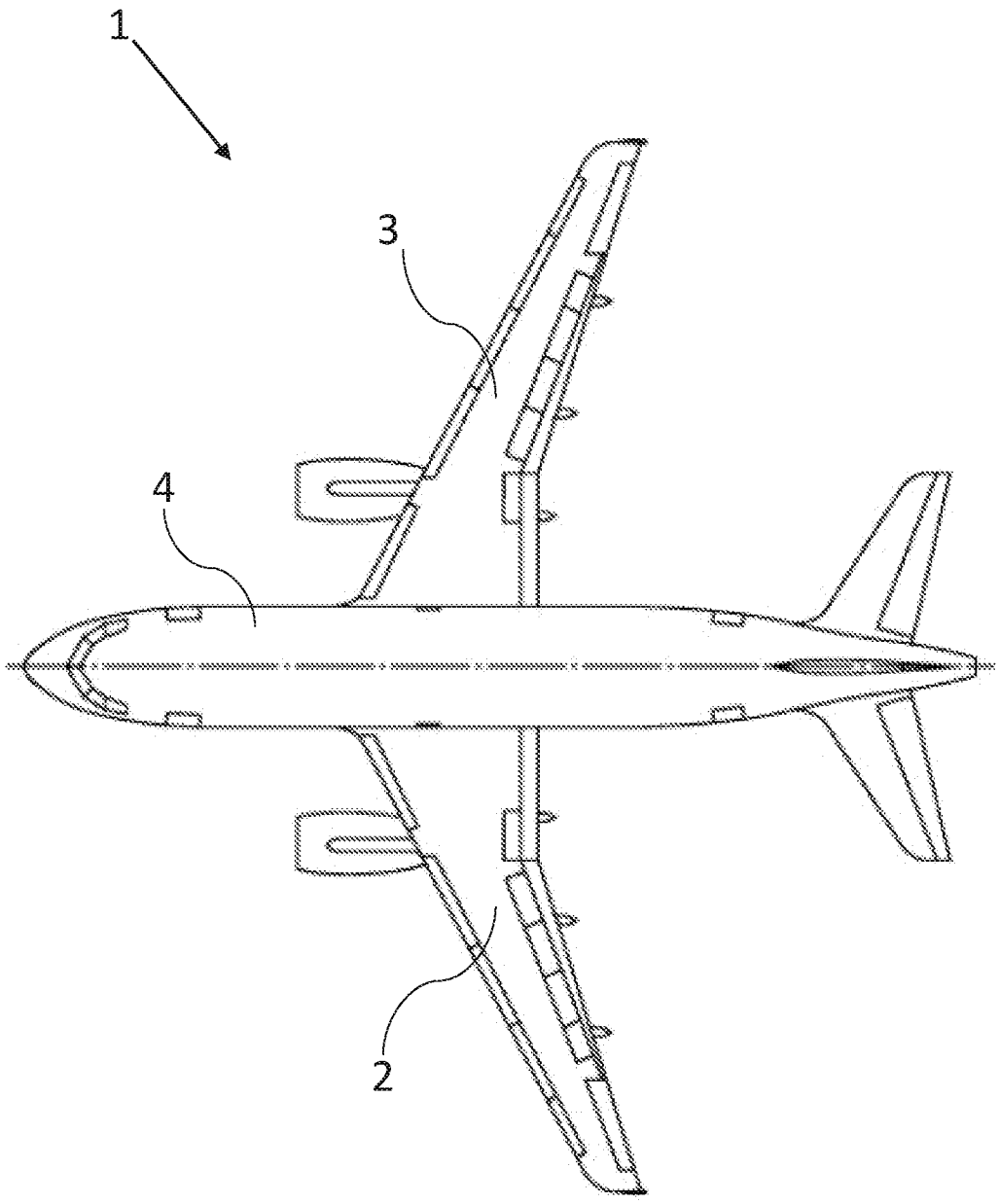

FIG. 1

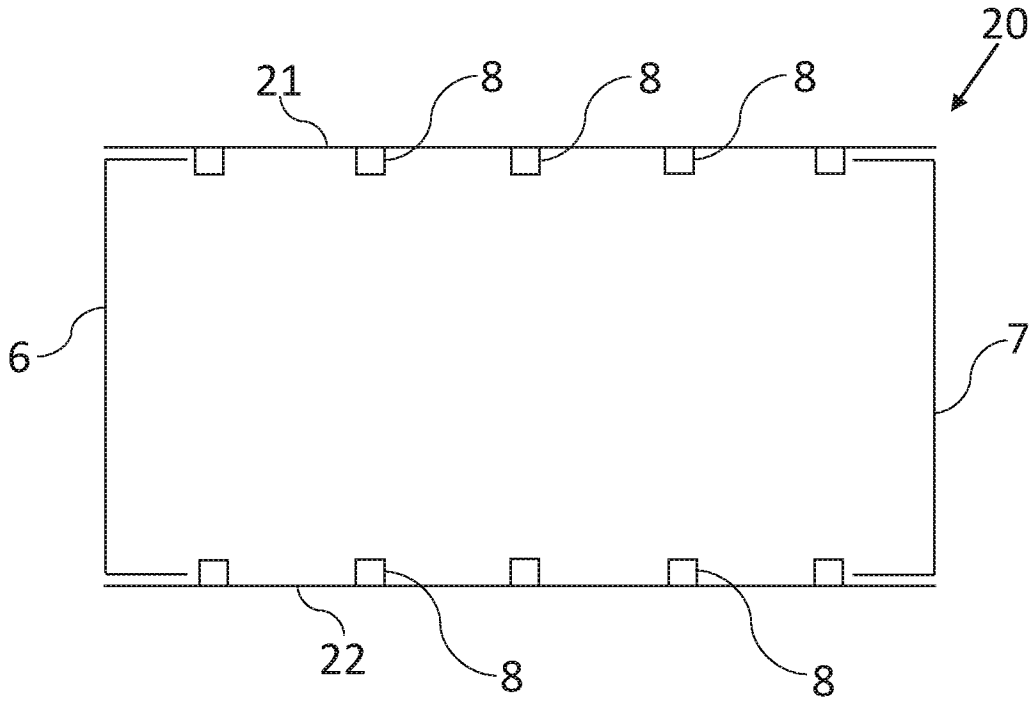

FIG. 2

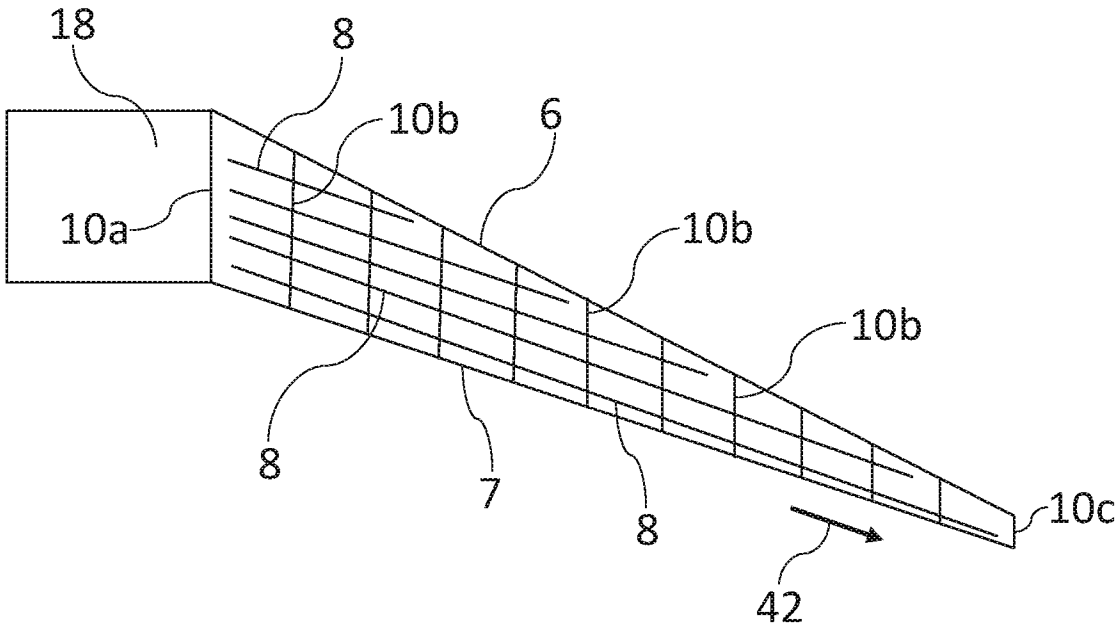

FIG. 3

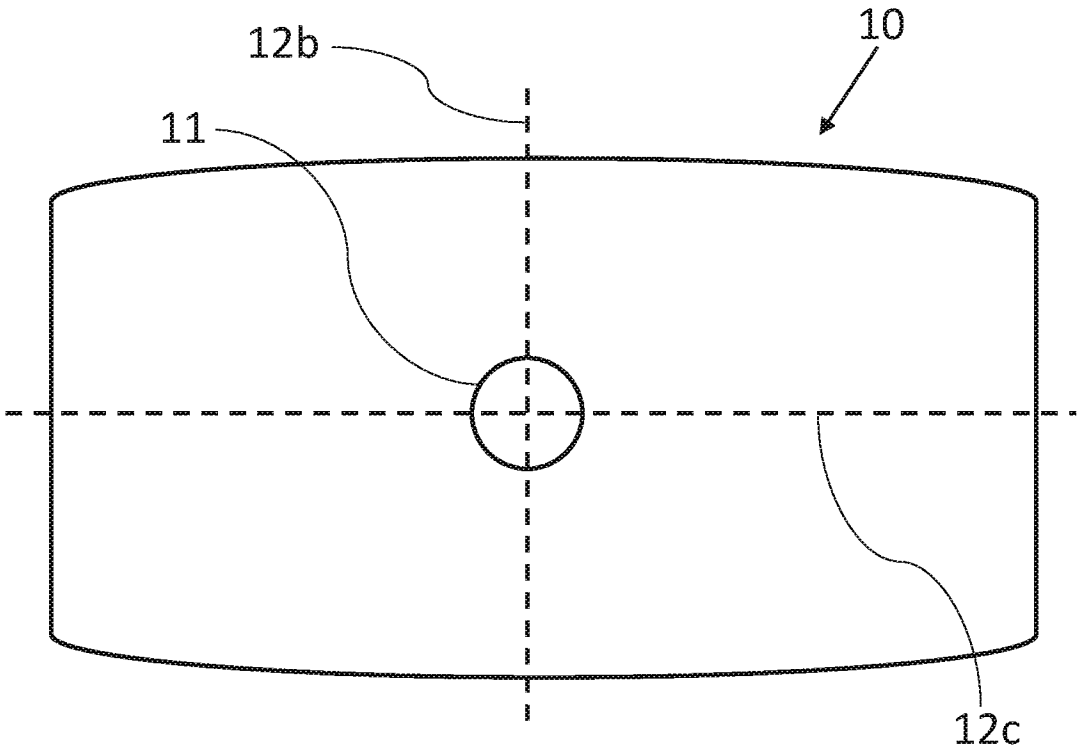

FIG. 4

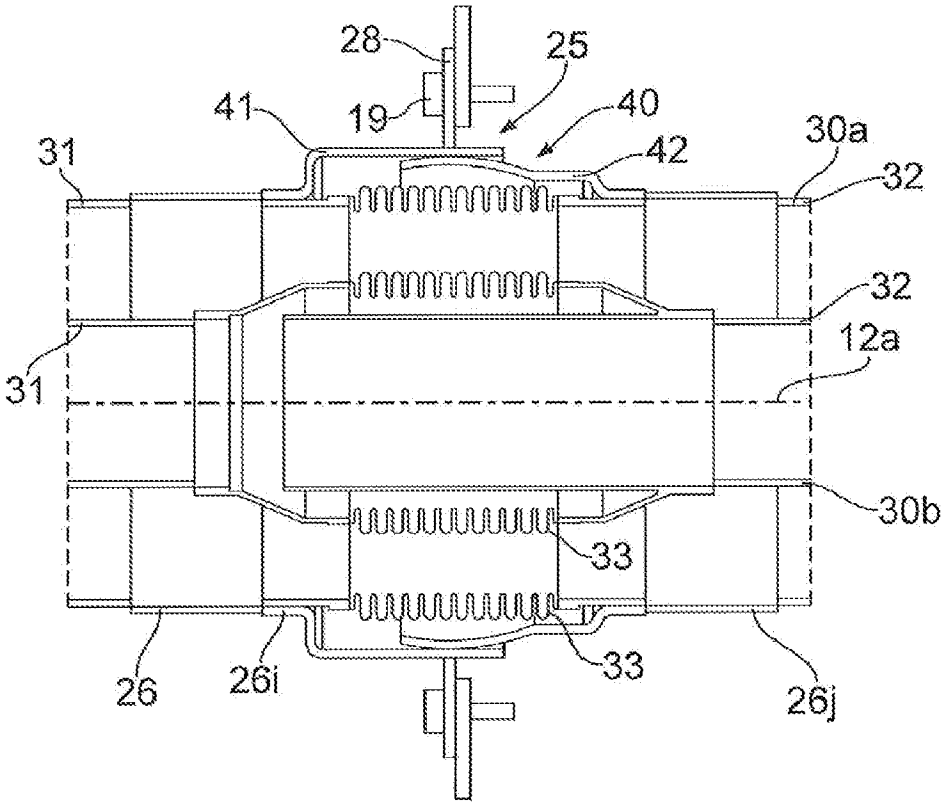
28
25
41
19
40
30a
31
42
32
32
12a
31
30b
33
33
26
26i
26j

FIG. 5

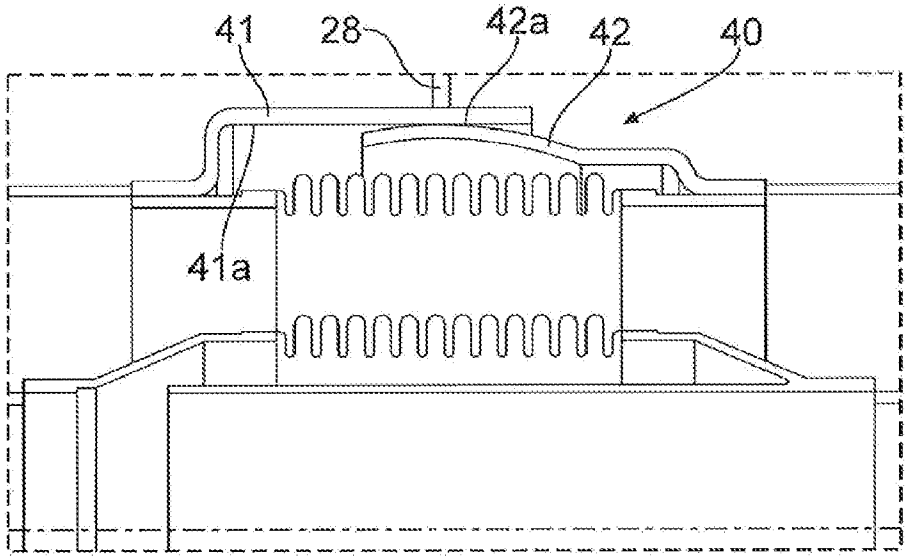
41
28
42a
42
40
41a

FIG. 6

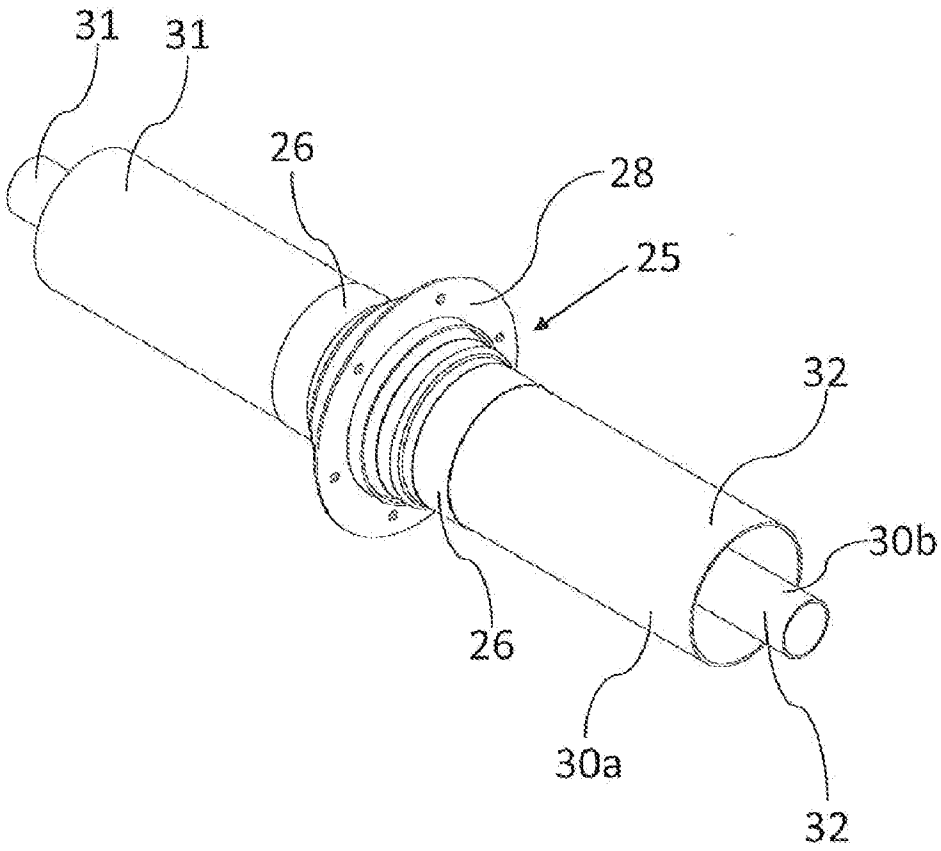

FIG. 7

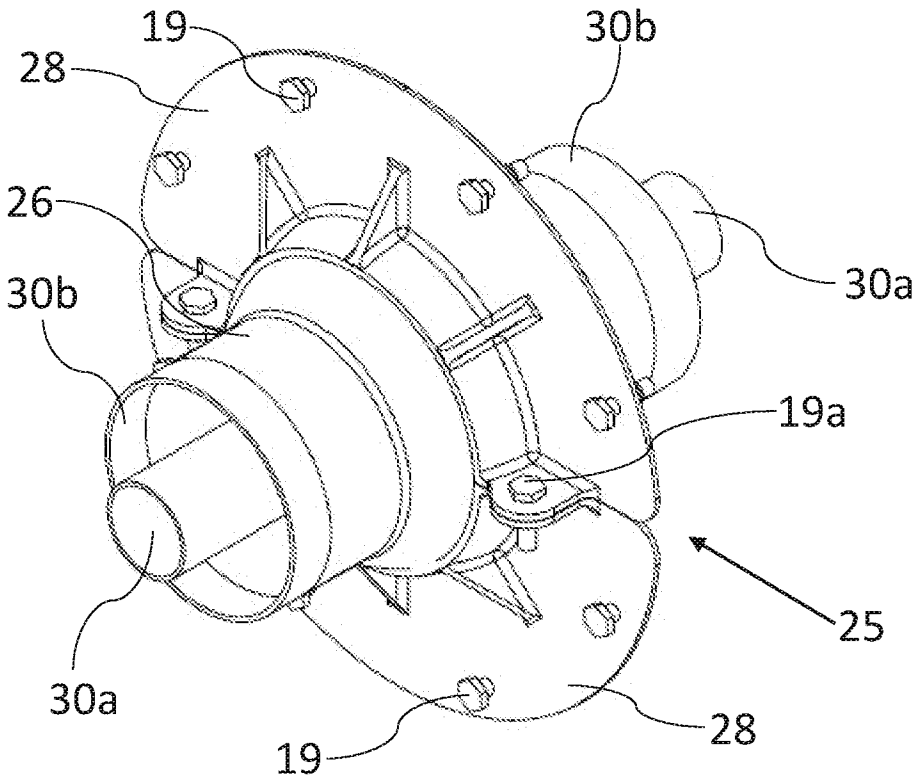

FIG. 8

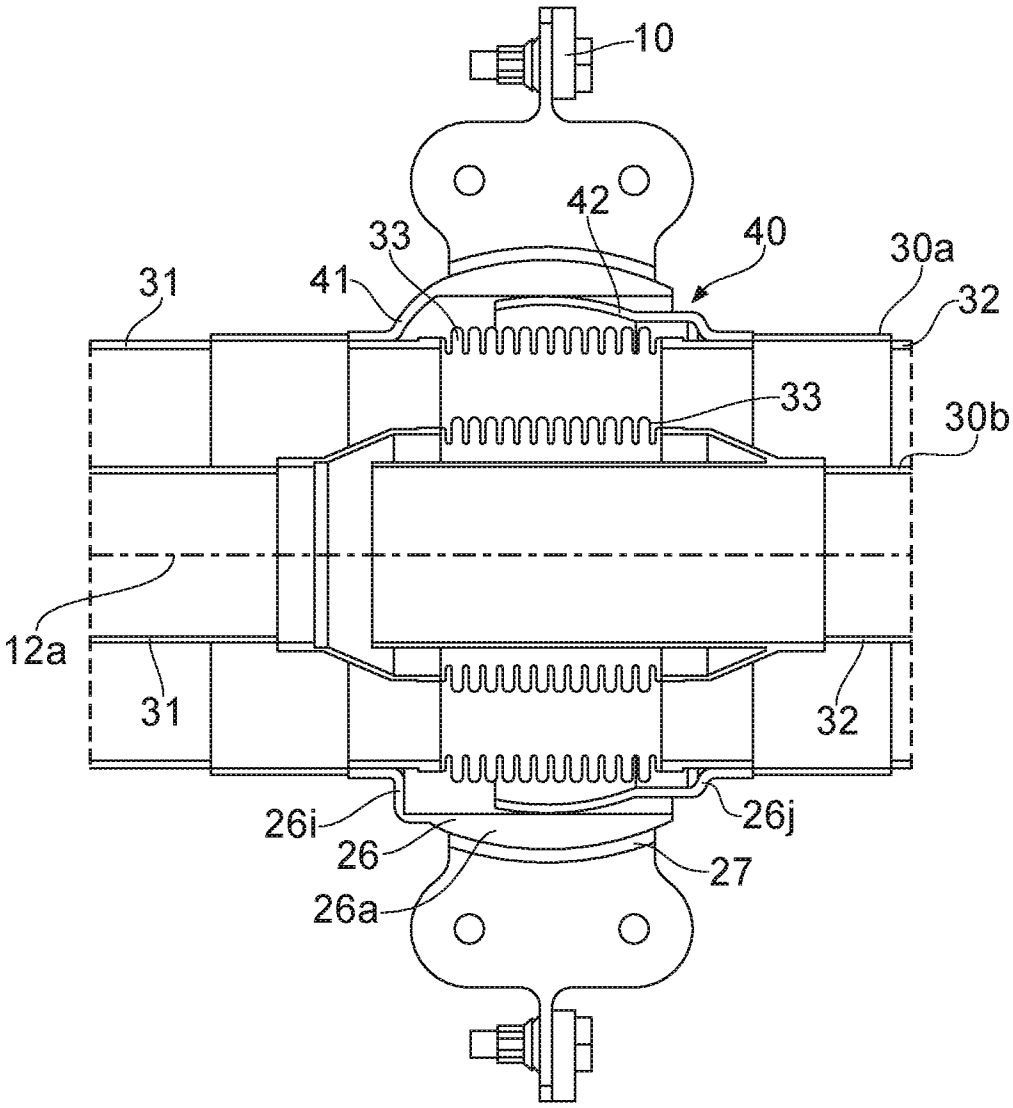
10
42
33
40
30a
31
41
32
33
30b
12a
31
32
26i
26j
26
27
26a

FIG. 9

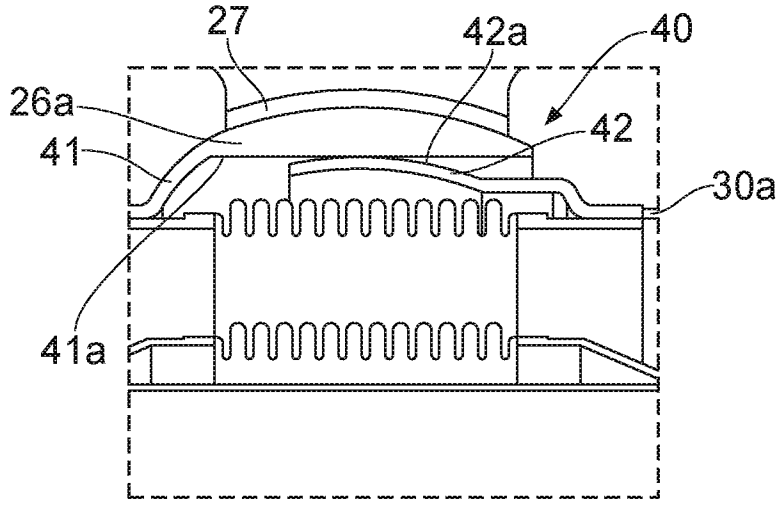
27
42a
40
26a
42
41
30a
41a

FIG. 10

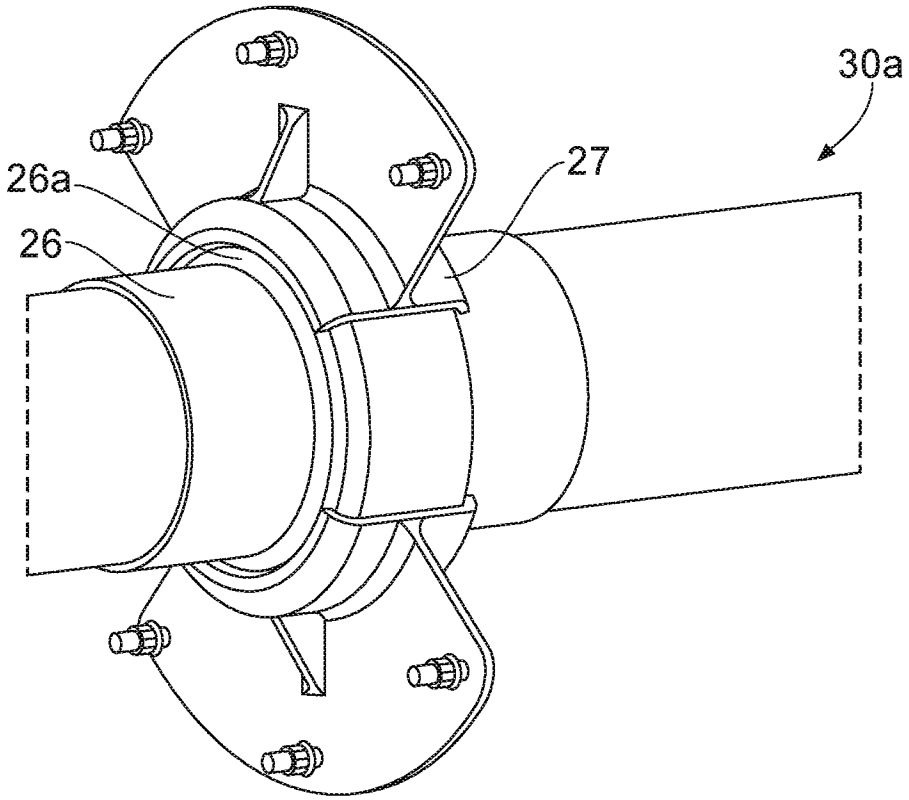

FIG. 11

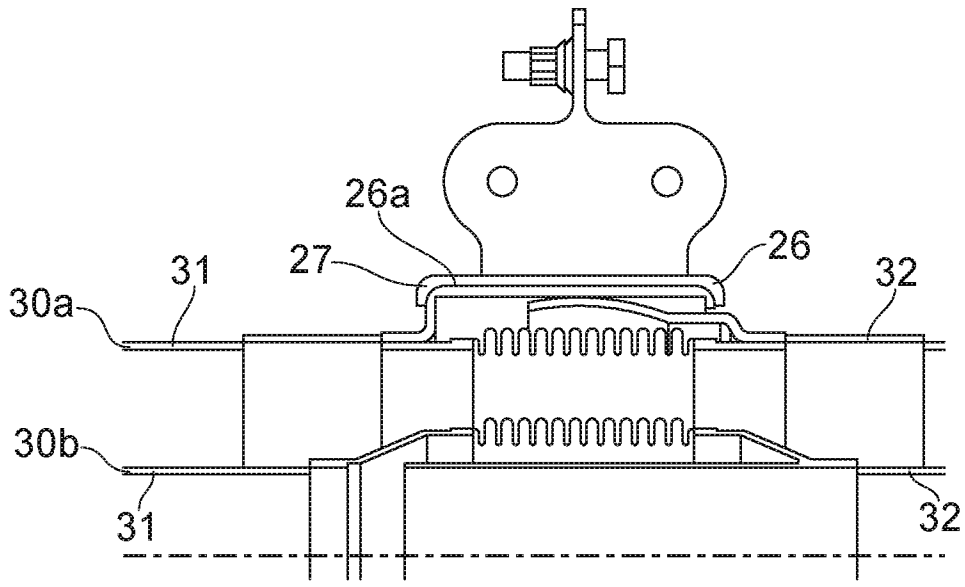

FIG. 12

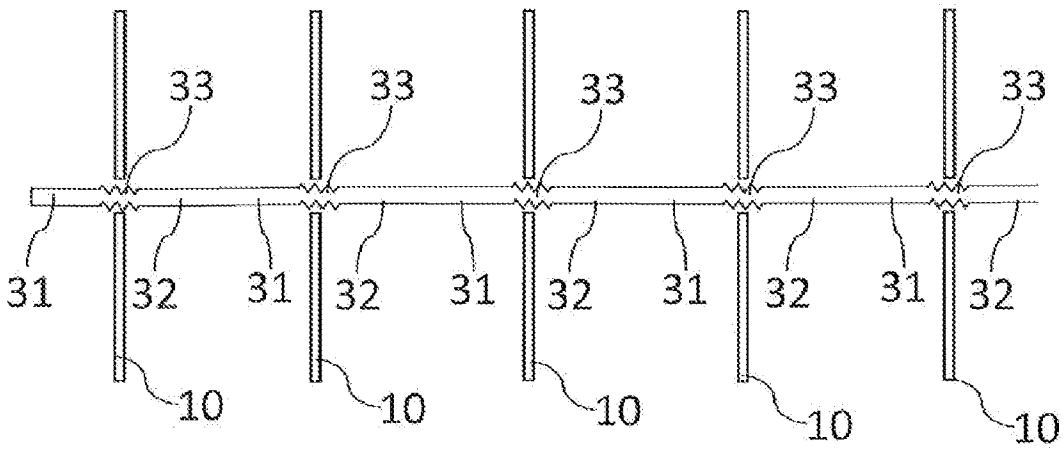
33
33
33
33
33
31
32
31
32
31
32
31
32
31
32
10
10
10
10
10

FIG. 13

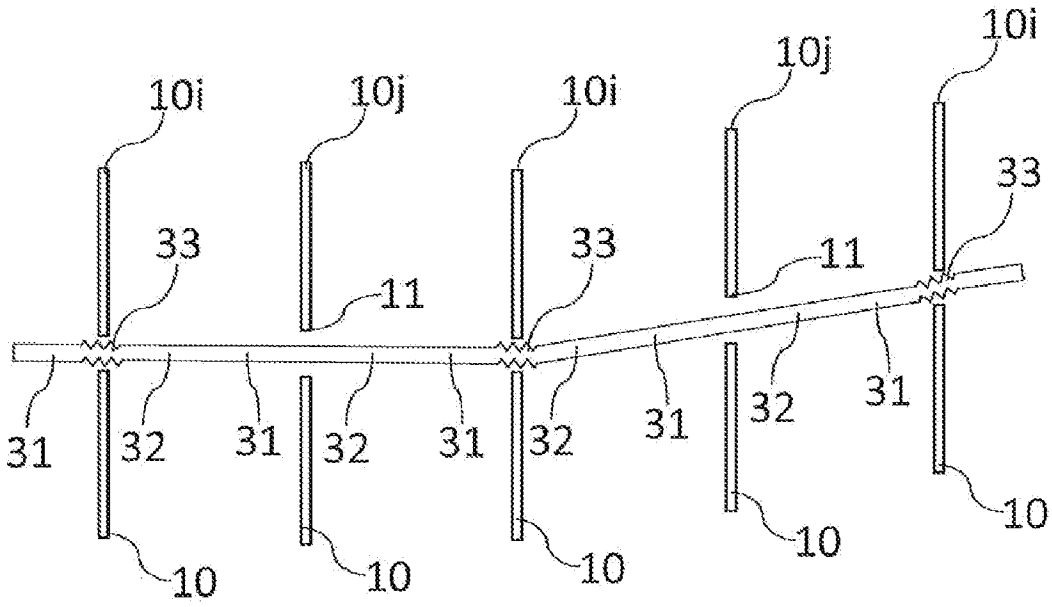
10i
10j
10i
10j
10i
33
33
33
11
11
31
32
31
32
31
32
31
32
31
32
10
10
10
10
10

FIG. 14

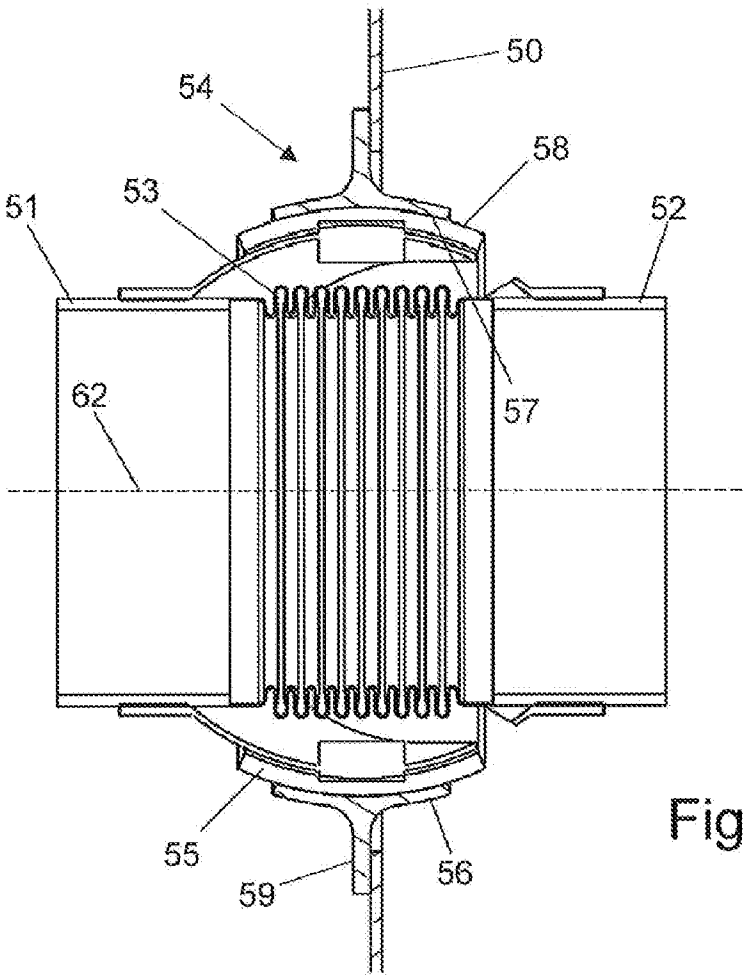

Fig. 15

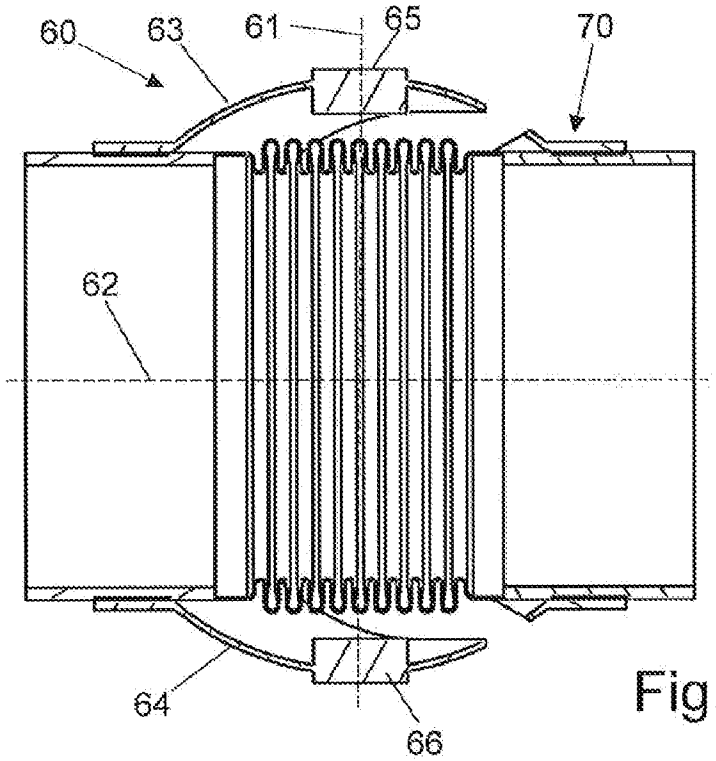

Fig. 16

Fig. 17

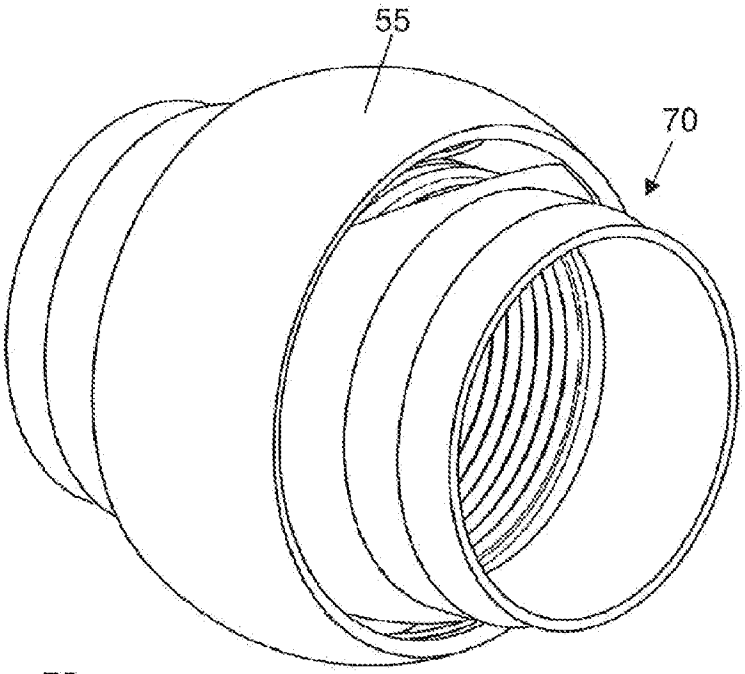

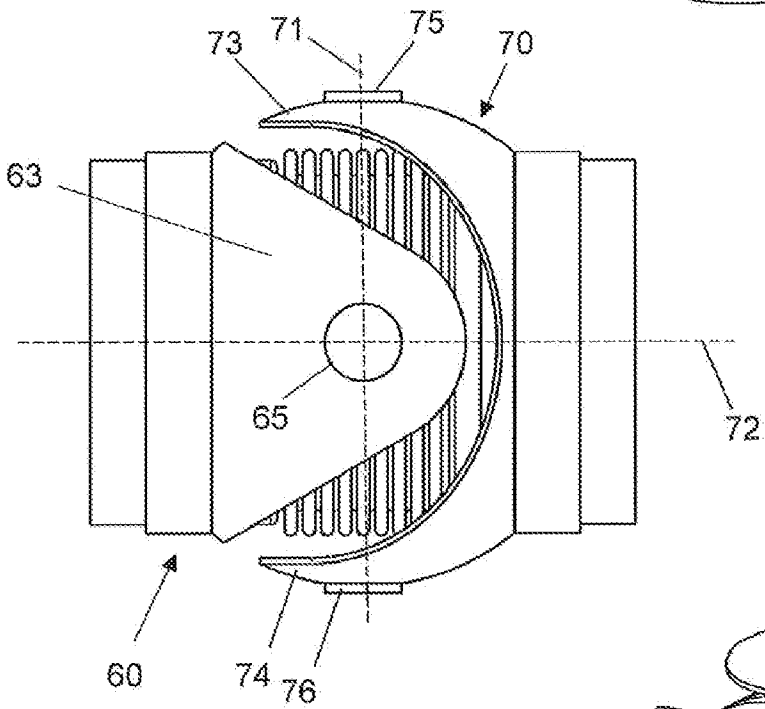

Fig. 18

Fig. 19

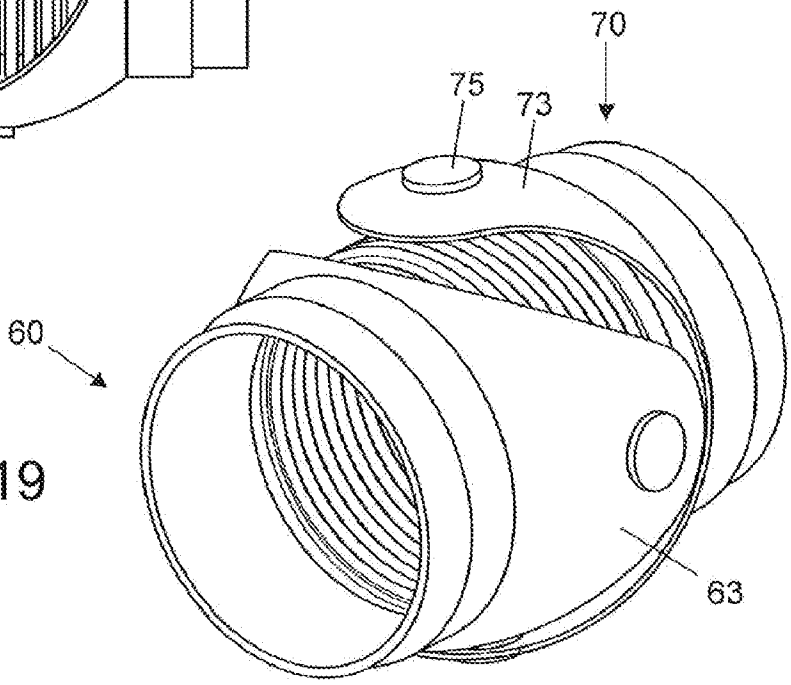

INTERNATIONAL SEARCH REPORT

International application No
PCT/GB2023/051547

A. CLASSIFICATION OF SUBJECT MATTER
INV. F16L27/10 B64C3/34 F16L5/00 B64D37/00 B64D37/30
ADD.

According to International Patent Classification (IPC) or to both national classification and IPC

B. FIELDS SEARCHED

Minimum documentation searched (classification system followed by classification symbols)
F16L B64C B64D

Documentation searched other than minimum documentation to the extent that such documents are included in the fields searched

Electronic data base consulted during the international search (name of data base and, where practicable, search terms used)
EPO-Internal, WPI Data

C. DOCUMENTS CONSIDERED TO BE RELEVANT

Category*	Citation of document, with indication, where appropriate, of the relevant passages	Relevant to claim No.
X A	US 5 067 690 A (BAC JEAN-CLAUDE [FR]) 26 November 1991 (1991-11-26) column 2, line 39 - line 46; figures 1,2,4,6 column 3, line 7 - line 19	1,14-16, 18,25-27 2-13,17, 19-24
X A	US 2 451 252 A (STOECKLY EUGENE E) 12 October 1948 (1948-10-12) column 2, line 2 - column 31; figures 1, 2	28-33,36 34,35
A	GB 920 428 A (POWER JETS RES & DEV LTD) 6 March 1963 (1963-03-06) figures 1-3	1
Y	GB 855 384 A (FLEXONICS CORP) 30 November 1960 (1960-11-30) page 2, line 14 - line 109; figures 1,2,7	28,34, 35,37,38

-/--

[x] Further documents are listed in the continuation of Box C.

[x] See patent family annex.

* Special categories of cited documents :

"A" document defining the general state of the art which is not considered to be of particular relevance

"E" earlier application or patent but published on or after the international filing date

"L" document which may throw doubts on priority claim(s) or which is cited to establish the publication date of another citation or other special reason (as specified)

"O" document referring to an oral disclosure, use, exhibition or other means

"P" document published prior to the international filing date but later than the priority date claimed

"T" later document published after the international filing date or priority date and not in conflict with the application but cited to understand the principle or theory underlying the invention

"X" document of particular relevance;; the claimed invention cannot be considered novel or cannot be considered to involve an inventive step when the document is taken alone

"Y" document of particular relevance;; the claimed invention cannot be considered to involve an inventive step when the document is combined with one or more other such documents, such combination being obvious to a person skilled in the art

"&" document member of the same patent family

Date of the actual completion of the international search	Date of mailing of the international search report
23 August 2023	01/09/2023

Name and mailing address of the ISA/	Authorized officer
European Patent Office, P.B. 5818 Patentlaan 2 NL - 2280 HV Rijswijk Tel. (+31-70) 340-2040, Fax: (+31-70) 340-3016	Sodtke, Christof

1

Form PCT/ISA/210 (second sheet) (April 2005)

INTERNATIONAL SEARCH REPORT

International application No
PCT/GB2023/051547

C(Continuation). DOCUMENTS CONSIDERED TO BE RELEVANT

Category*	Citation of document, with indication, where appropriate, of the relevant passages	Relevant to claim No.
Y	US 2013/187013 A1 (MINAMI KEISUKE [JP]) 25 July 2013 (2013-07-25) paragraph [0086] - paragraph [0088]; figures 19-21	28,34, 35,37,38
A	US 2 470 989 A (SIDNEY KELLER ET AL) 24 May 1949 (1949-05-24) paragraph [0001]; figures 1-2	1,28
A	US 2021/180733 A1 (GUPTA ALOK [GB] ET AL) 17 June 2021 (2021-06-17) paragraph [0055]; figures 1-3	1,28
A	FR 3 027 371 A1 (AIRBUS OPERATIONS SAS [FR]) 22 April 2016 (2016-04-22) figures 1, 3	1,28
A	US 2014/144002 A1 (CONCHI JR WILLIAM R [US]) 29 May 2014 (2014-05-29) figure 1	1,28
A	US 2013/026751 A1 (PETIT DAVID P [GB] ET AL) 31 January 2013 (2013-01-31) figures 1, 7A	1,28

1

INTERNATIONAL SEARCH REPORT

Information on patent family members

International application No
PCT/GB2023/051547

Patent document cited in search report	Publication date	Patent family member(s)	Publication date
US 5067690 A	26-11-1991	CA 2011354 A1	03-09-1990
		DE 387132 T1	23-05-1991
		DE 69003278 T2	21-04-1994
		EP 0387132 A1	12-09-1990
		FR 2643892 A1	07-09-1990
		US 5067690 A	26-11-1991
US 2451252 A	12-10-1948	NONE	
GB 920428 A	06-03-1963	NONE	
GB 855384 A	30-11-1960	NONE	
US 2013187013 A1	25-07-2013	BR 112013008743 A2	28-06-2016
		CA 2813917 A1	03-05-2012
		CN 103154588 A	12-06-2013
		EP 2634467 A1	04-09-2013
		JP 5737903 B2	17-06-2015
		JP 2012092890 A	17-05-2012
		US 2013187013 A1	25-07-2013
		WO 2012057039 A1	03-05-2012
US 2470989 A	24-05-1949	NONE	
US 2021180733 A1	17-06-2021	CN 112984254 A	18-06-2021
		EP 3839315 A1	23-06-2021
		US 2021180733 A1	17-06-2021
FR 3027371 A1	22-04-2016	NONE	
US 2014144002 A1	29-05-2014	CA 2831513 A1	29-05-2014
		CN 103851271 A	11-06-2014
		EP 2738434 A2	04-06-2014
		ES 2753991 T3	15-04-2020
		JP 6473565 B2	20-02-2019
		JP 2014111987 A	19-06-2014
		RU 2013152984 A	10-06-2015
		US 2014144002 A1	29-05-2014
US 2013026751 A1	31-01-2013	EP 2551573 A1	30-01-2013
		US 2013026751 A1	31-01-2013