Jan. 22, 1935. O. J. SEGUIN 1,988,813

LUG BOLT AND CAP FOR SAME

Filed July 11, 1934

Fig. 1.

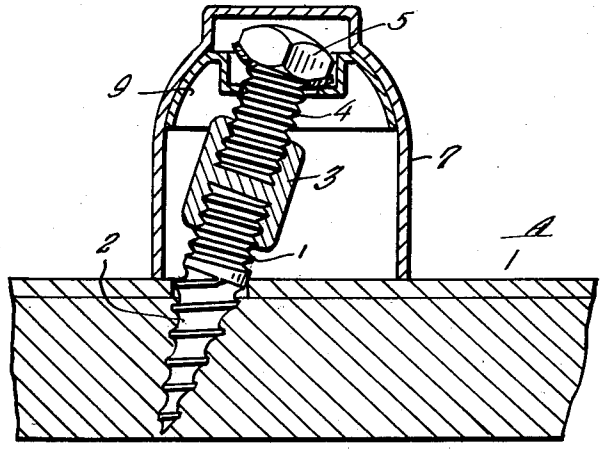

Fig. 2.

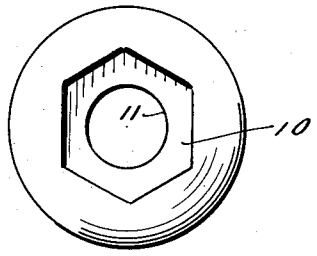

Fig. 4.



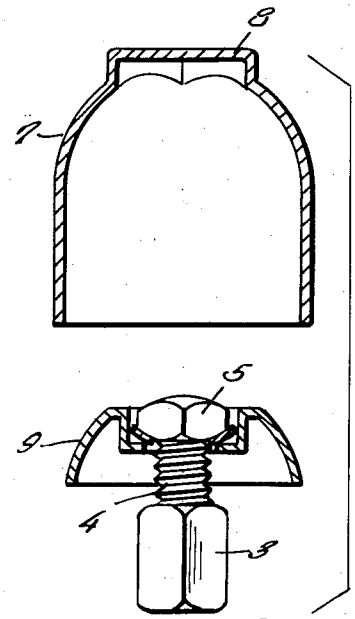

Fig. 3.

Inventor

O. J. Seguin

By Clarence A. O'Brien

Attorney

Patented Jan. 22, 1935

1,988,813

UNITED STATES PATENT OFFICE

1,988,813

LUG BOLT AND CAP FOR SAME

Oscar J. Seguin, Springfield, Mass.

Application July 11, 1934, Serial No. 734,683

2 Claims. (Cl. 85—1)

This invention relates to a lug bolt and a cap for covering the same, the general object of the invention being to provide means whereby the cap will set level on the member through which the bolt passes even though the bolt is not vertical.

This invention also consists in certain other features of construction and in the combination and arrangement of the several parts to be hereinafter fully described, illustrated in the accompanying drawing and specifically pointed out in the appended claims.

In describing the invention in detail, reference will be had to the accompanying drawing wherein like characters denote like or corresponding parts throughout the several views, and in which:

Figure 1 is a sectional view showing the invention in use.

Figure 2 is a view of the inner cap member.

Figure 3 is a view of the outer cap member or shell and the inner cap member with the upper section of the bolt removed from the shell.

Figure 4 is a view of the washer.

In this drawing, the numeral 1 indicates the lower section of the lug bolt which is formed with the spirally threaded tapered lower part 2, the upper part of said section being threaded, as shown, and the numeral 3 indicates a double nut having a pair of threaded sockets therein, the lower one of which engages the upper end of the section 1 while the upper one of which receives the upper section 4 of the bolt. The head 5 of the bolt has a rounded under face which rests snugly within the substantially concavo-convex washer 6. The outer cap member or shell is shown at 7 and has a non-circular upper end 8 for receiving a wrench or the like, this shell being of substantially dome shape. An inner cap member 9 has curved side walls for engaging the curved side walls of the shell and the parts are welded or otherwise connected together. The top of the member 9 is flat and has a non-circular depression 10 therein for receiving the washer 6 and the head of the bolt. This member 9 is also provided with the centrally arranged hole 11 through which the upper section of the bolt passes.

As will be seen the nut 3 is threaded on the lower section of the bolt and then a wrench is engaged with the nut to force the part 2 into the member, such as A. Then the shell with the upper section of the bolt placed over the parts with the lower end of the upper section engaging the socket of the nut. Then the shell is turned to thread the upper section into the nut.

It will thus be seen that the cap will rest in a straight position on the member even though the lug or bolt is at an angle and that the cap will hide all the parts enclosed thereby.

It is thought from the foregoing description that the advantages and novel features of the invention will be readily apparent.

It is to be understood that changes may be made in the construction and in the combination and arrangement of the several parts provided that such changes fall within the scope of the appended claims.

What is claimed is:

1. A sectional bolt consisting of an upper and a lower section located in axial alignment and having a non-circular head at the upper end of the upper section, a nut for connecting the two sections together, a shell enclosing parts of the bolt and the nut, a partition member in the shell having a non-circular recess therein for receiving the head of the bolt whereby turning movement of the shell and the partition member will rotate the bolt, said partition member having an opening therein through which the upper section of the bolt passes.

2. A sectional bolt consisting of an upper and a lower section located in axial alignment and having a non-circular head at the upper end of the upper section, a nut member having upper and lower sockets screw threaded for receiving the adjacent ends of the sections, a shell, a member fitting in the shell and having a non-circular recess therein for partly receiving the head of the bolt whereby turning movement of the shell will rotate the bolt and said member having an opening therein through which the upper section of the bolt passes and a washer located in the recess for engaging the under face of the head of the bolt.

OSCAR J. SEGUIN.