N. GREY.

PHONOGRAPH.

APPLICATION FILED DEC. 24, 1919.

1,361,717. **Patented Dec. 7, 1920.**

2 SHEETS—SHEET 1.

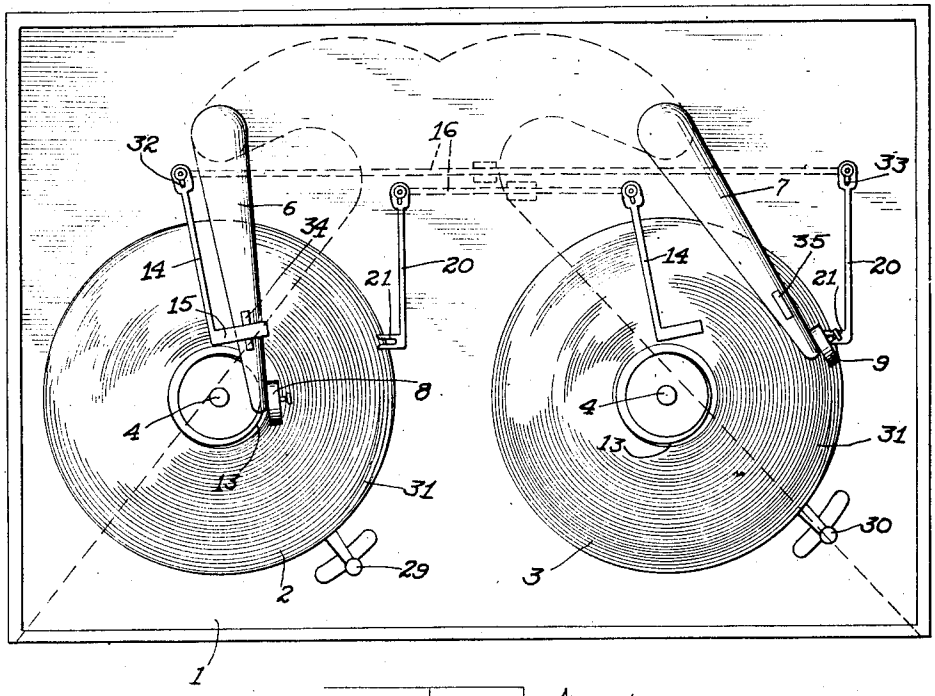

FIG. 1

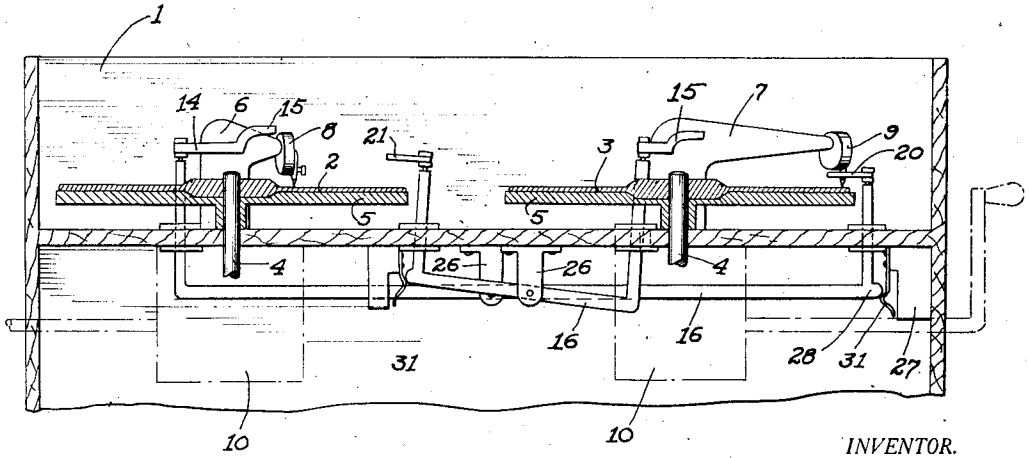

FIG. 2

INVENTOR.

Nicholas Grey

BY

Harry Jacobson

ATTORNEY.

N. GREY.

PHONOGRAPH.

APPLICATION FILED DEC. 24, 1919.

1,361,717.

Patented Dec. 7, 1920.

2 SHEETS—SHEET 2.

FIG. 3

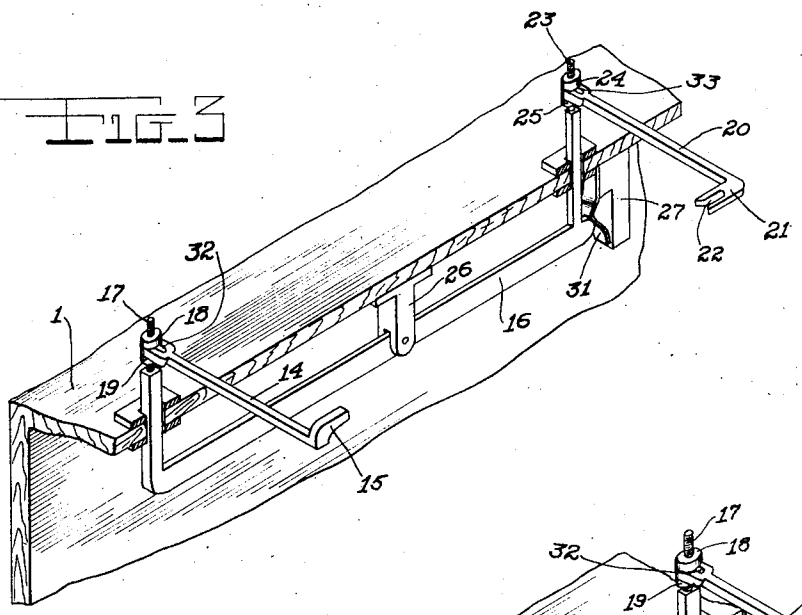

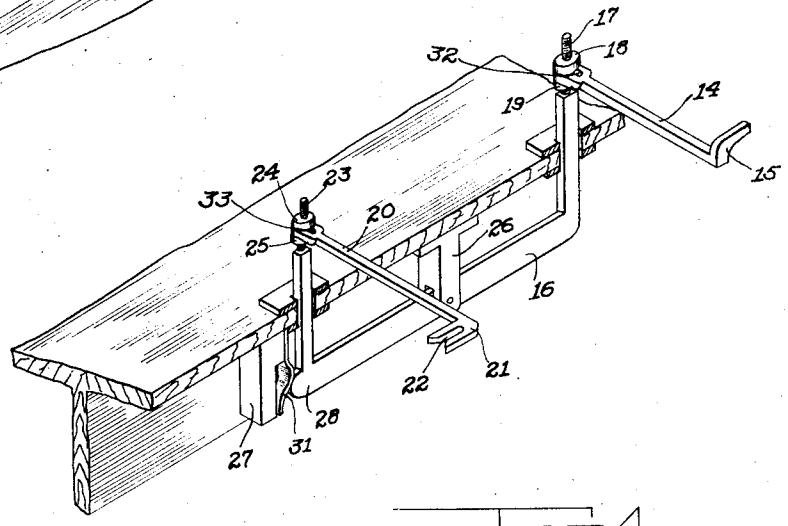

FIG. 4

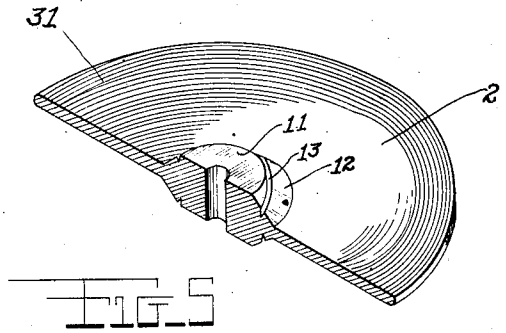

FIG. 5

INVENTOR.

Nicholas Grey

BY

Harry Jacobson

ATTORNEY.

UNITED STATES PATENT OFFICE.

NICHOLAS GREY, OF NEW BRUNSWICK, NEW JERSEY.

PHONOGRAPH.

1,361,717. Specification of Letters Patent. Patented Dec. 7, 1920.

Application filed December 24, 1919. Serial No. 347,165.

To all whom it may concern:

Be it known that I, NICHOLAS GREY, citizen of the United States, and resident of New Brunswick, in the county of Middlesex and State of New Jersey, have invented certain new and useful Improvements in Phonographs, of which the following is a specification.

This invention relates to sound reproducing machines, and has for its object the provision of automatic means by which phonograph disk records may be continuously played in succession without interruption of the sound when a change is made from one record to another.

A further object of this invention is the provision of a phonograph disk record which will act as the means for initiating the change from one playing mechanism and record to another similar mechanism and record.

For the attainment of these and other objects, I employ the mechanism shown in its preferred form in the accompanying drawings, in which,

Figure 1 is a plan view of my invention.

Fig. 2 is a vertical section of the same.

Fig. 3 is a perspective view of one of the devices for disengaging the playing means from one record and for causing a second playing means to engage another record.

Fig. 4 is a similar view of the other of said devices, made of opposite hand to that shown in Fig. 3.

Fig. 5 is a perspective view of a fragment of the record.

In the practical embodiment of my invention, the cabinet or stand 1 is provided with two sets of the usual sound reproducing mechanism for playing records 2 and 3, which are mounted on the usual pins 4 and turntables 5, by means of which tables said records are revolved.

The sound arms 6 and 7 and the reproducing diaphragms 8 and 9 are of the type ordinarily used for that purpose. The turntables 5 are revolved by means of the usual motors 10 not shown in detail and are adapted to receive records 2 and 3. Each of said records as 2 is provided with a centrally located hub 11, Fig. 5, thicker than the remainder of the disk record. The inclined surface 12 joins the upper face of hub 11 with the playing face of the record and has a spiral groove 13 therein which is a continuation of the playing groove in the record. Spiral groove 31 of comparatively steep pitch is provided at the outer rim of record 3 for rapidly leading the needle into the playing groove of the record. It is obvious that both sides of said record may be made as described, if desired, as is shown by the drawings.

The automatic mechanism for beginning the playing of one record immediately after the playing of the other has been completed is made in two sets, one right hand, Fig. 3, and one left hand, Fig. 4. In said mechanism, arm 14 has a right angle bend 15 at the end thereof shaped on the under side to fit sound arms 6 and 7, said arm 14 being adjustably attached to the U-shaped lever 16 at the threaded portion 17, by means of nut 18 above the forked portion 32 at the end of arm 14, and nut 19 under said fork. Hook arm 20 having a right angle bend 21 at the end thereof, has a slot 22 in said bend through which the playing needle of diaphragm 8 or 9 may be passed, the diaphragm being supported by said bend. Said arm 20 is attached to lever 16 by passing forked end 33 around the threaded end 23 of said lever and securing the arm in place by means of nuts 24 and 25. The upright portions of lever 16 pass through suitable openings in the cabinet top, said lever being pivotally supported at its middle by bracket 26 attached to the under side of said cabinet top. Protection plates 34 and 35 of suitable material are attached to the upper side of sound arms 6 and 7 respectively for preventing undue wear thereof, when said sound arms engage arms 14. For preventing undirected rocking of lever 16, a light spring 31 supported by block 27 presses against projection 28 of the horizontal portion of said lever. The usual operating levers 29 and 30 are provided for starting and stopping the revolution of the records.

The operation of my improved mechanism is as follows:—

Record 2 having been placed in position on table 5, sound arm 6 is swung until the needle of diaphragm 8 can be inserted into slot 22 of arm bend 21, and the diaphragm supported by said bend, arm 20 being raised sufficiently to enable the needle to clear the record. Lever 29 is now shifted to start the record revolving, and arm 20 slightly depressed until the needle enters the playing groove of the record, which groove gradually leads the needle toward the central part

of said record. After playing of the record is begun, record 3 is placed on its turntable 5 and sound arm 7 swung into proper position for starting the playing of said record, wherein it is supported by arm 20 which has been raised so that the needle of diaphragm 9 clears record 3. Lifting of arm 20 raises the corresponding end of lever 16 whereby the other end of said lever is lowered and arm 14 with its bend 15 placed in such a position that when record 2 is completely played, the needle of diaphragm 8 runs up the beveled surface 12 along groove 13, thereby raising arm 6 which in turn raises bend 15, arm 14 and the corresponding end of lever 16, whereby the other end of said lever is lowered as is hook arm 20 and diaphragm 9 supported thereby, the needle being slowly dropped on to record 3, which has first been caused to revolve by shifting lever 30 just before the playing of record 2 has been completed.

It is obvious that the operation of lowering arm 7 to begin the playing of record 3 is automatic, so that the playing of records 2 and 3 in succession is uninterrupted. Record 2 may now be replaced by another record while record 3 is being played, and the operation repeated, so that a concert lasting through any interval may be continuously played or a speech of any length reproduced without interruption.

Adjustment of arms 14 and 20 is provided for, so that the action above described may take place smoothly, and adjustment made for records varying somewhat in diameter.

What I claim is:

1. In an automatic device for playing phonograph records in uninterrupted succession, a substantially flat disk record, a hub at the center of said record thicker than the remainder thereof, a beveled surface having spiral groove therein joining the face of said hub with the face of said disk, a sound reproducing mechanism, means for engaging said spiral groove for lifting said reproducing mechanism, and means operatively connected to said reproducing mechanism for lowering a second reproducing mechanism on to a second record when said first mentioned reproducing mechanism is lifted.

2. In an automatic device for playing phonograph records in uninterrupted succession, sound reproducing mechanism, a substantially flat disk record thicker at the center than at the remainder of said record, means for causing said reproducing mechanism to ride up on said thicker portion after said record has been played, and means operable by the lifting of said mechanism for starting the playing of a second record immediately after the playing of the first record has been completed comprising an arm arranged to be lifted by said mechanism, a second reproducing mechanism, and a pivoted lever operatively connecting said arm and said second reproducing mechanism.

3. In an automatic device for playing phonograph records in uninterrupted succession, a sound reproducing mechanism, a record thicker at the center than at the remainder of said record, means on said record for lifting said reproducing mechanism after said record has been played, and means operable by said reproducing mechanism for lowering a second sound reproducing mechanism on to a second record immediately after said first mentioned reproducing mechanism has been lifted comprising a pivoted lever and arms extending from said lever, each of said arms being arranged to engage one of said reproducing mechanisms.

4. In an automatic device for playing phonograph records in uninterrupted succession, a sound reproducing mechanism, a record, means on said record for lifting said reproducing mechanism after said record has been played, and means for automatically beginning the playing of a second record immediately after said first-mentioned record has been played comprising an arm for engaging said reproducing mechanism, a lever pivoted near the middle thereof attached at one end to said arm, a hook arm attached to the other end of said lever arranged to be lowered when said reproducing mechanism is raised and a second reproducing mechanism supported by said hook arm.

5. In an automatic device for playing phonograph records in uninterrupted succession, playing mechanism arranged to be lifted when a record has been completely played, and means for automatically beginning the playing of a second record immediately after said first-mentioned record has been played comprising an arm arranged to be lifted by said playing mechanism, a U-shaped lever attached at one end to said arm, a bracket pivoting said lever near the middle thereof, and a hook arm attached to the other end of said lever arranged to be lowered when said playing mechanism is lifted.

6. In a sound reproducing machine, a disk record, a hub at the center of said record, a beveled surface having a spiral groove therein joining the face of said hub with the face of said disk, a sound reproducing mechanism, a needle carried by said reproducing mechanism running in said spiral groove for lifting said reproducing mechanism after said record has been played, and means operable by the lifting of said mechanism for starting the playing

of a second record immediately after the playing of said first-mentioned record has been completed, comprising an arm arranged to be lifted by said mechanism, a lever pivoted at the middle thereof and attached to said arm to be rocked thereby, a hook arm attached to said lever, and a second sound reproducing mechanism supported by said hook arm.

Signed at New Brunswick, in the county of Middlesex and State of New Jersey this 22d day of Dec. A. D. 1919.

NICHOLAS GREY.