G. P. DAVIS.

ADVERTISING DEVICE.

APPLICATION FILED OCT. 4, 1915.

1,258,750.

Patented Mar. 12, 1918.

4 SHEETS—SHEET 1.

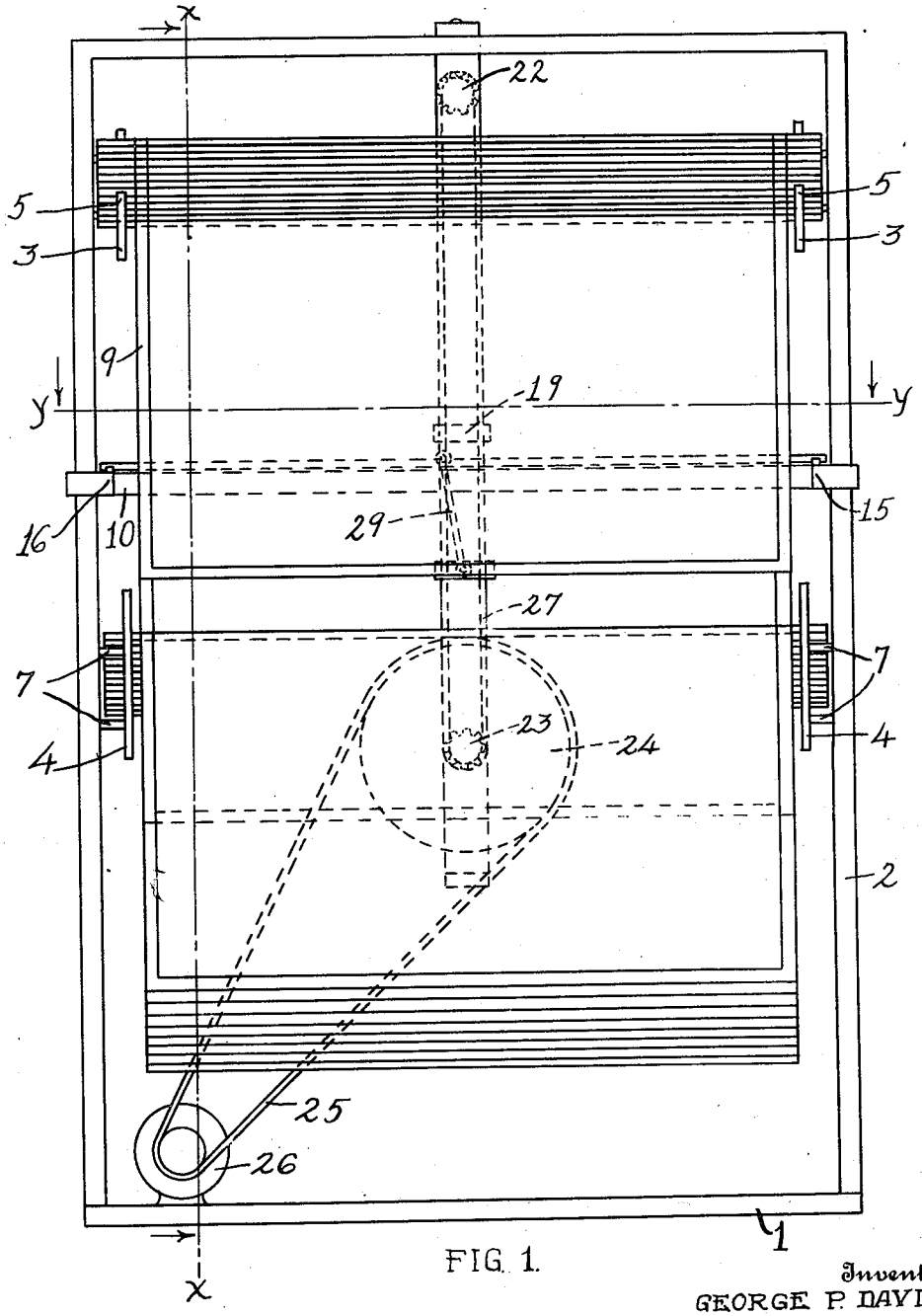

FIG. 1.

Inventor
GEORGE P. DAVIS.

Witness
Emma B. Wisner.

By Charles E. Wisner

Attorney

G. P. DAVIS.

ADVERTISING DEVICE.

APPLICATION FILED OCT. 4, 1915.

1,258,750.

Patented Mar. 12, 1918.

4 SHEETS—SHEET 2.

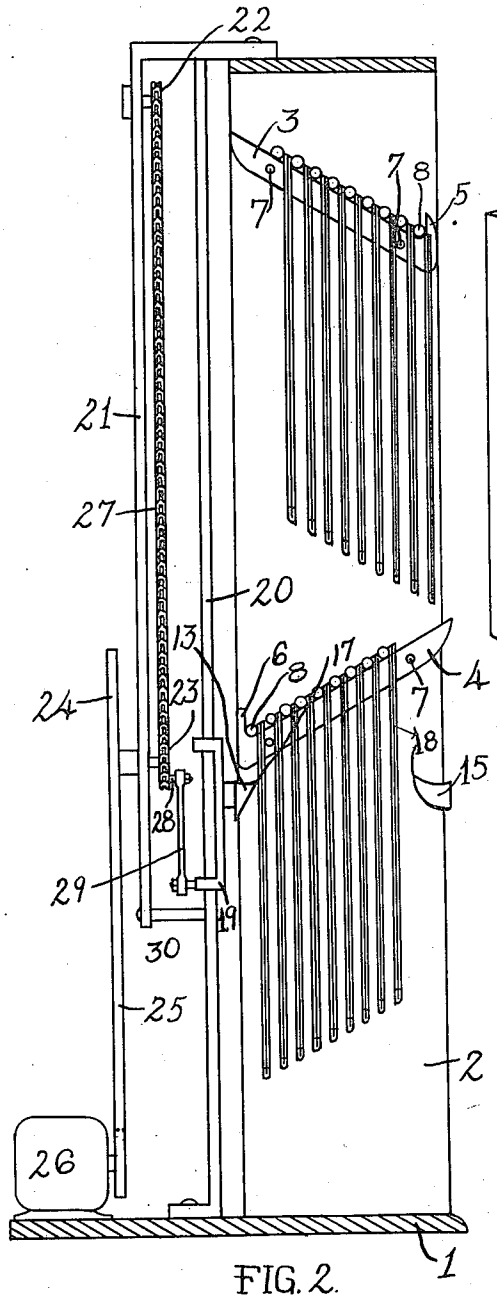

FIG. 2.

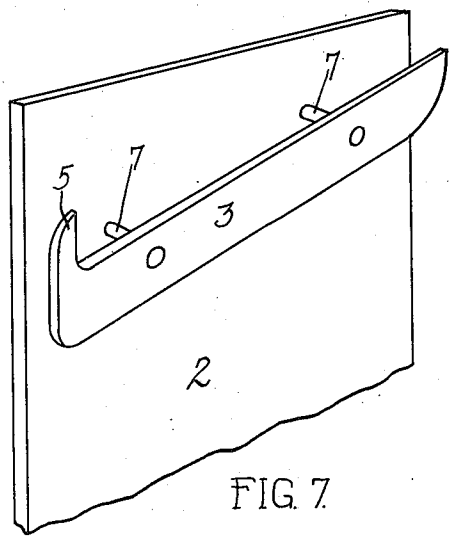

FIG. 7.

FIG. 8.

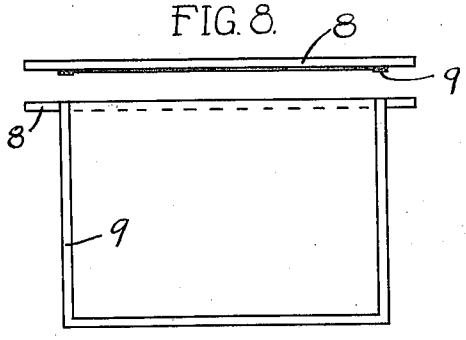

FIG. 9.

Witness
Emens Wisner.

Inventor
GEORGE P. DAVIS

By Charles E. Wisner

Attorney

G. P. DAVIS.

ADVERTISING DEVICE.

APPLICATION FILED OCT. 4, 1915.

1,258,750.

Patented Mar. 12, 1918.

4 SHEETS—SHEET 3.

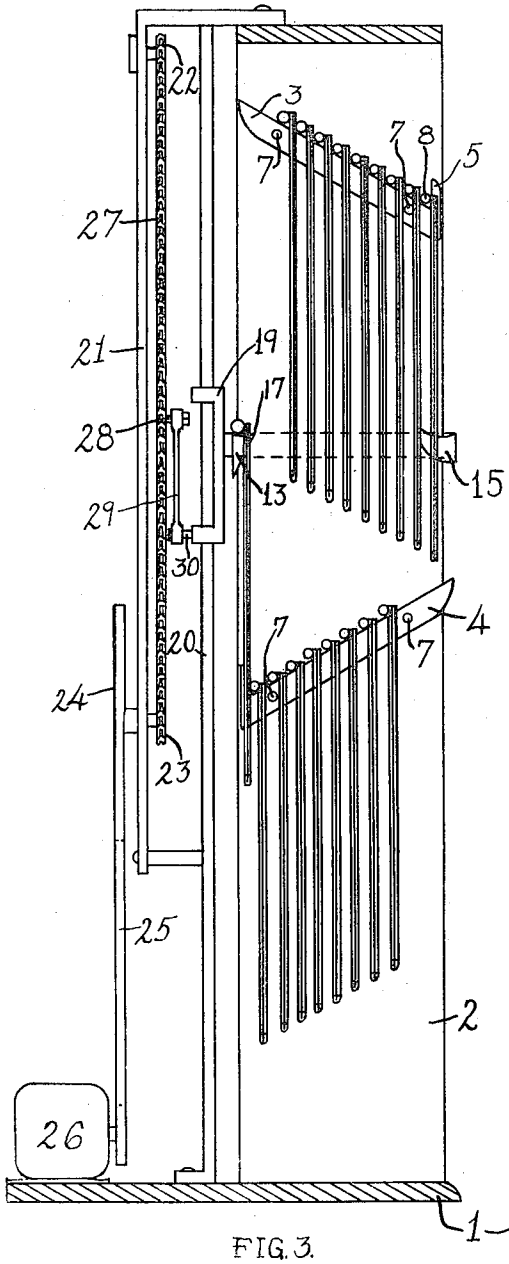

FIG. 3.

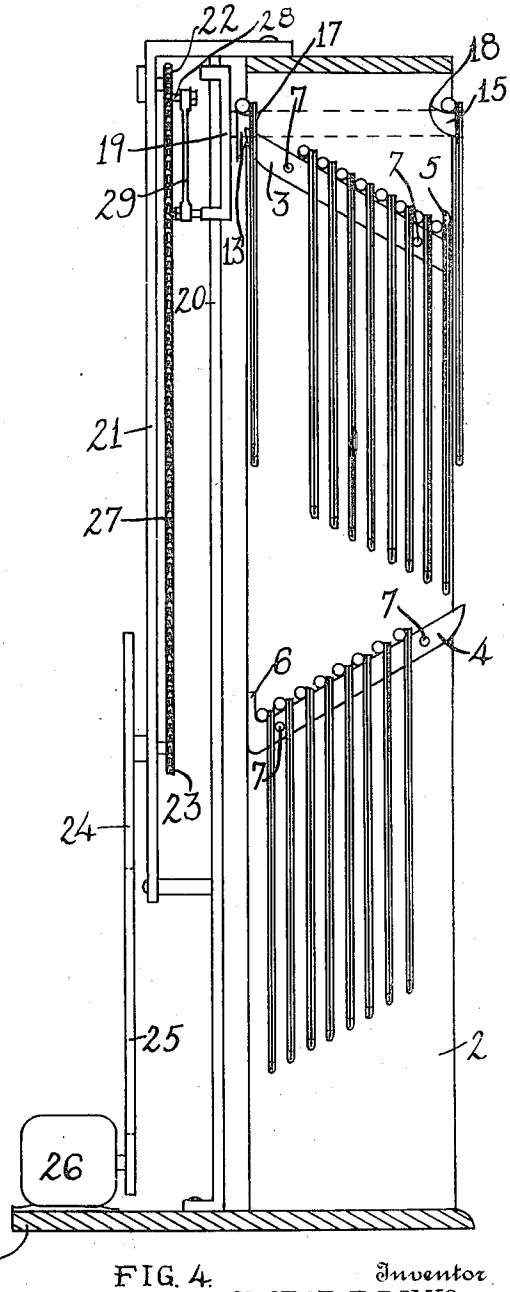

FIG. 4.

Inventor
GEORGE P. DAVIS.

Witness
Emma B. Wiener.

By Charles E. Wiener
Attorney

G. P. DAVIS.

ADVERTISING DEVICE.

APPLICATION FILED OCT. 4, 1915.

1,258,750.

Patented Mar. 12, 1918.

4 SHEETS—SHEET 4.

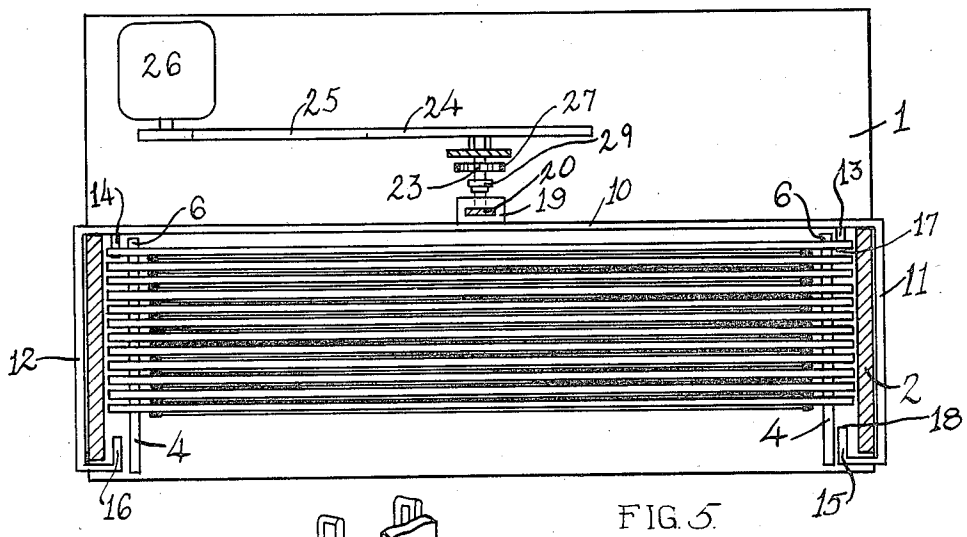

FIG. 5.

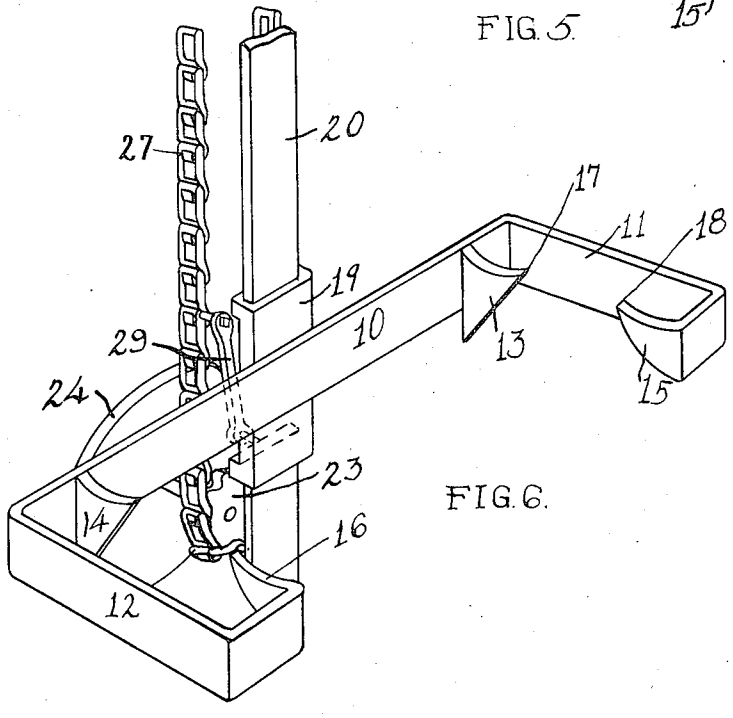

FIG. 6.

Inventor
GEORGE P. DAVIS.

Witness
Emens B. Wisner.

By Charles E. Wisner
Attorney

UNITED STATES PATENT OFFICE.

GEORGE P. DAVIS, OF DETROIT, MICHIGAN, ASSIGNOR TO BULLETIN MACHINE COMPANY, OF BUFFALO, NEW YORK, A CORPORATION OF NEW YORK.

ADVERTISING DEVICE.

1,258,750. Specification of Letters Patent. Patented Mar. 12, 1918.

Application filed October 4, 1915. Serial No. 53,934.

To all whom it may concern:

Be it known that I, GEORGE P. DAVIS, a citizen of the United States, residing at Detroit, county of Wayne, State of Michigan, have invented a certain new and useful Improvement in Advertising Devices, and declare the following to be a full, clear, and exact description of the same, such as will enable others skilled in the art to which it pertains to make and use the same, reference being had to the accompanying drawings, which form a part of this specification.

This invention relates to advertising devices and an object thereof is a device for displaying successively a series of cards or mats, bearing advertising matter or other matter for display, each of which is exposed to view for a certain length of time. A further object is a device of the character stated that is simple in construction and automatic in operation and that occupies but small space horizontally adapting the device to be used in show windows or other places of limited size.

The device is preferably formed of a framework provided with a pair of oppositely inclined guideways one above the other arranged in parallel relation upon opposite sides of the framework on which the rods of the card supporting frame are adapted to ride and down which they travel by gravity. A card on each of the upper and lower sets of guideways is exposed to view at the same time and a transfer device or carrier is reciprocatingly mounted on the framework adapted to remove a card and frame from the front of the upper guideways and deposit it upon the lower guideways, and also remove a card from the lower guideways and deposit it on the upper guideways. Thus, by reciprocating the carrier, the cards are successively changed and each is exposed to view in consecutive order for a considerable period, as the card is first exposed to view on the upper pair of guideways, is continued in view while being deposited on the lower guideway, and remains in view until a succeeding card is deposited on the lower guideway. This arrangement of the cards in banks one above the other also enables a large number of cards to be carried in much smaller space horizontally than if carried in a single bank.

These and other objects and novelties of the invention are hereinafter more fully described and claimed, and the preferable means by which these objects may be attained is shown in the accompanying drawings in which—

Figure 1 is a front elevation of an advertising device embodying my invention.

Fig. 2 is a vertical section of the device taken on line x—x of Fig. 1, showing the carrier or transfer device at the bottom of its movement.

Fig. 3 is a similar section showing the carrier transferring a card from the lower set of guideways to the upper set.

Fig. 4 is a similar section showing the carrier near the uppermost point of its movement.

Fig. 5 is a horizontal section taken on line y—y of Fig. 1.

Fig. 6 is a perspective view of the carrier and part of the operating mechanism.

Fig. 7 is a detail of one of the inclined guideways.

Fig. 8 is a plan view of the card frame.

Fig. 9 is an elevation thereof.

Similar characters refer to similar parts throughout the drawing and specification.

The device consists of a base 1 having an upright, substantially rectangular, framework 2 mounted thereon. On each vertical side member of the frame, as is indicated more clearly in Fig. 1, there is a pair of oppositely inclined guideways 3 and 4. The two upper guideways 3, 3, on opposite sides of the device are in parallel relation and inclined toward the front of the machine as is indicated in Fig. 2, and the two lower guideways 4, 4 are inclined toward the back of the machine. Each guideway 3 is provided with a stop 5 at the lower end thereof to prevent the cards from passing off from the guideway and these stops 5 are pointed at the upper end as shown, for reasons hereinafter given. The lower guide members 4 are also each provided with a stop 6 to prevent the cards from passing by gravity from the guideways. Each of the guide members 3 and 4 is spaced from the supporting vertical member 2 and is carried by bolts or lugs 7, 7 as indicated more particularly in Fig. 7, and into this space between the guide members and the supporting frame portions of the transfer device or carrier project to engage the said frames as hereinafter described.

The cards or mats on which the matter to

be displayed appears are preferably supported in a metal frame shown more particularly in Figs. 8 and 9. This frame consists of a tube or rod 8 and a channel supporting frame secured on the face of the rod in any approved manner. All edges of the card except the upper edge may be inserted in the channel frame 9 which is preferably used to prevent a warping of the cards. The rod 8 is greater in length than the attached frame 9 and, as is indicated more clearly in Fig. 1, when the frame and cards are in position in the machine, these projecting ends of the rod ride on the inclined guideways 3 and 4, with a card displayed between each pair of similarly inclined guideways and the ends of the rods extend beyond the guideways over the space between the guideways and the supporting side frame.

The carrier frame, as shown more particularly in Fig. 6, consists of a cross-bar 10 and two end bars 11 and 12. On the cross bar 10 are the carriers 13 and 14 secured in parallel relation on the bar 10 spaced from the end members 11 and 12 respectively, and each of the end bars 11 and 12 terminate in similar carriers 15 and 16 spaced from the end members in horizontal alinement with the carriers 13 and 14 respectively. Both sets of carriers have curved upper edges as indicated in the drawing and terminate in pointed ends 17 and 18, which ends are adapted to pass between the card supporting rods as hereinafter described. The cross-bar 10 of the carrier is secured to a reciprocable block 19 adapted to ride on the upright bar 20 at the back of the machine.

As indicated more clearly in Figs. 2 to 4, an upright member 21 is supported on the frame at the rear of the member 20, and at the upper end of this member is a sprocket wheel 22 and near the lower end of the member is a similar sprocket wheel 23. On the shaft of the sprocket 23 is a drive wheel 24 connected by means of a belt 25 with an electric motor 26 providing the source of power. On the two sprocket wheels 22 and 23 is a sprocket chain 27, provided with a link having a lug 28 thereon on which is pivotally mounted the pitman 29, the opposite end of which is connected to a similar lug 30 on the reciprocable member 19. This pitman is pivotally connected to both the lugs 28 and 30 and rotation of the chain about the sprocket wheels 22 and 23 reciprocates the member 19 on its supporting bar 20, which raises and lowers the carrier frame. The end members 11 and 12 of the carrier frame pass on the outside of the vertical side members 2, with the carrier lugs on the inside of said members which are thus adapted to ride in the space between the guideways 3 and 4 and the said side members.

The operation of transferring the cards from one set of guideways to the other is shown more particularly in Figs. 2 to 4. In Fig. 2 the carrier is at the lowermost point of its movement, and on its moving upward from the position there shown, the carrier 13 and its companion 14 engage the ends of the rod 8 of the lowermost card frame on the guideways 4. The pointed end 17 of the carriers passes between the first rod and the adjacent one, thus separating the card frame from the stack and lifting it therefrom in its upward movement as indicated in Fig. 3. It is to be noted that, in this first upward movement of the carrier frame, the forward carriers 15 and 16 do not engage any of the card frames on the lower guideways 4, there being sufficient space between the front card and the front end of the guideway to allow the carriers 15 and 16 to pass freely thereby. As the carrier moves upward however, the carriers 15 and 16 pick up the forward card frame rod 8 in the upper guideways 3, raising it up from the stack as indicated in Fig. 4. Also as the carrier frame moves upward the card frame on the rear carriers 13 and 14 passes by the rear rounded end of the inclined guideways 3, as may be understood in Fig. 4, and in so passing the rod is moved backward by the guideways on the curved upper face of the carrier to allow it to so pass the end, and as the rod passes said end it moves back on the curved face in such position that on the return movement of the carrier the rod is deposited on the ends of the guideways 3, and moves forward by gravity in the upper stack. The forward carriers 15 and 16 also have a curved upper face as stated, and on picking up the rod of the front card frame in the upper stack, the said frame rides forward on the said curved face so that when the frame again moves downward the pointed upper end of the stop 5 on the upper guideways 3 prevents the same from again being deposited on the upper guideways. The front ends of the guideways 4 project into the path of movement of the frame carried by the carrier members 15 and 16 so that it is deposited on the said guideways during the downward movement of the carrier. The carrier frame in reciprocating, thus picks up a card from the back of the stack on the lower guideways and deposits it on the upper guideways, and the upward movement of the carrier also picks up the front card of the stack on the upper guideways 3 and deposits it on the lower guideways on its downward movement, which action is continuous and automatic during the operation of the machine.

While I have shown an electric motor as being a convenient source of power it is to be understood that power may be derived from any desirable source. From the foregoing description it becomes evident that

the device is simple and automatic in operation and inexpensive to manufacture as it is formed of comparatively few parts that do not require great accuracy in workmanship or assembly.

Having thus briefly described my invention, its utility and mode of operation, what I claim and desire to secure by Letters Patent of the United States is—

1. In a device of the character described, a framework, oppositely inclined guideways arranged in sets in parallel relation upon opposite sides of the framework, the guideways consisting of independent bars or members inclined to allow free movement of the cards thereon by gravity and provided with stops at the lower ends, cards or mats supported in said guideways down which they are adapted to travel by gravity, and a carrier reciprocatably mounted in the framework adapted in its movement to transfer a card from the lower to the upper guideways, the carrier movement being such as to first raise the cards from behind the stops on the guideways and arranged to withdraw the card from possible engagement with the stop on succeeding downward movement and from the upper to the lower guideways.

2. In a device of the character described, a framework, oppositely inclined guideways arranged in sets in parallel relation upon opposite sides of the framework, a series of cards or mats supported in each set of parallel guideways down which they are adapted to travel by gravity, said guideways being formed with stops at the lower end to prevent the cards from passing off from the guideways by gravity, and a transfer device or carrier reciprocatably mounted in the framework adapted to alternately transfer cards from the lower to the upper guideways and from the upper to the lower guideways, the transfer device having pick-up members adapted to remove a single card from each bank on upward movement thereof and withdraw the same from possibility of engagement with the stops on succeeding downward movement.

3. In a device of the character described, a framework, a pair of upper and a pair of lower guideways, the pairs being oppositely inclined, a series of cards or mats supported in each set of upper and lower guideways down which they are adapted to travel by gravity, means for preventing removal of the cards from the guideways by gravity, a reciprocable transfer device having arms extending to the front and rear of each set of guideways on opposite sides thereof adapted to remove a card from the lower end of the lower guideways and deposit it on the upper end of the upper guideways and remove a card from the lower end of the upper guideways and deposit it on the upper end of the lower guideways in alternate relation.

4. In a device of the character described, a framework, a pair of oppositely inclined guideways in vertical alinement upon each side of the framework, and in parallel relation upon opposite sides thereof, a series of cards or mats supported on each set of parallel guideways down which they are adapted to travel by gravity, stops formed at the lower end of each guideway preventing movement of the cards off from the guideways by gravity, a reciprocatable carrier frame, means for reciprocating the frame, and a pair of forwardly and a pair of rearwardly positioned carrier members on said frame, each pair of carriers being adapted to separate a single card from the series on one set of guideways and transfer it to the other set, the pairs of carriers being connected to move simultaneously in either direction and the guideways being formed to coöperate in such a manner that a card is first separated from one bank and delivered to the other bank and then the card taken from said other bank and delivered to the first bank in alternate relation.

5. In a device of the character described, a framework, a pair of oppositely inclined guideways in vertical alinement upon each side of the framework and in parallel relation upon opposite sides thereof, a series of cards or mats supported on each set of parallel guideways down which they are adapted to travel by gravity, stationary stops preventing removal of the cards by gravity, a transfer device reciprocatably mounted in the framework, carriers mounted thereon adapted to remove cards successively from the lower end of each set of parallel guideways and deliver them onto the upper end of the other set, and means for reciprocating the transfer device.

6. In a device of the character described, a framework, means for supporting two sets of cards or mats therein in such manner that the cards of each set travel in opposite directions by gravity, a rod for each card having ends extending outwardly on opposite sides of the supporting set of guideways, a reciprocable transfer device having arms disposed on opposite sides of the sets of guideways, a front and rear rod engaging device on each arm, the two pairs of devices being adapted to alternately remove cards from the one set and deposit it with the other on reciprocation of the transfer device.

7. In a device of the character described, framework, means for supporting two sets of cards or mats therein in such manner that the cards of each set may travel in opposite directions by gravity, a transfer device adapted to alternately separate a single card from each set and deposit it with the other set, a block to which the transfer device is secured, a drive chain, a pitman pivotally secured to the chain and to the block where-

by the chain may reciprocate the block and attached transfer device, and means for driving the chain.

8. In a device of the character described, a framework, a pair of upper and a pair of lower oppositely inclined guideways, the guideways of each set being in parallel relation, a series of cards or mats supported on each set of guideways down which they are adapted to travel by gravity, each of said guideways being formed with an upwardly projecting portion at the lower end providing a stop for the supported cards, a transfer device reciprocatably mounted in the framework adapted to separate a single card from each set and deposit it on the guideways for the other set, a drive chain, a pitman pivotally connecting the chain and the transfer device, and means for driving the chain, the transfer device providing the sole means of supporting the cards during movement from one set or bank to the other.

9. In a device of the character described, a framework, a pair of upper and a pair of lower guideways mounted on the vertical side members of the framework, the said pairs being in oppositely inclined relation and spaced from the vertical side members, each of the guideways being provided with a stop at the lower end thereof, a series of card carrying frames for each set of guideways, each of the frames having portions resting on the supporting pair of guideways and extending over the space between the guideways and the vertical supporting member, a transfer device reciprocatably mounted on the framework, carriers on said device riding in the space between the guideways and supporting member and adapted to alternately separate a single card from each set and deposit it on the guideways for the other set, and means for reciprocating the transfer device.

In testimony whereof, I sign this specification.

GEORGE P. DAVIS.