March 2, 1965 H. C. FOWLER ETAL 3,171,447

GARBAGE AND TRASH DISPOSAL DEVICE

Filed April 25, 1962

3 Sheets-Sheet 1

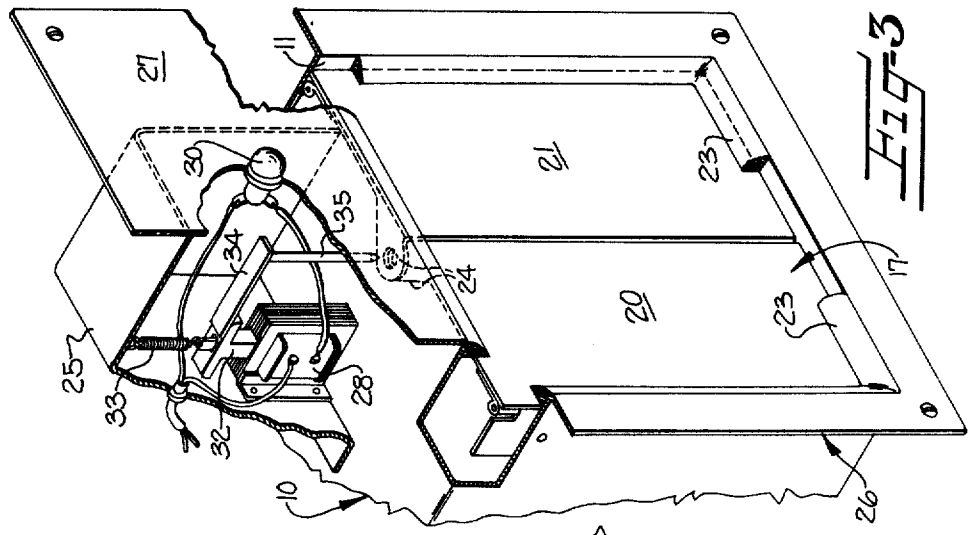

Fig-3

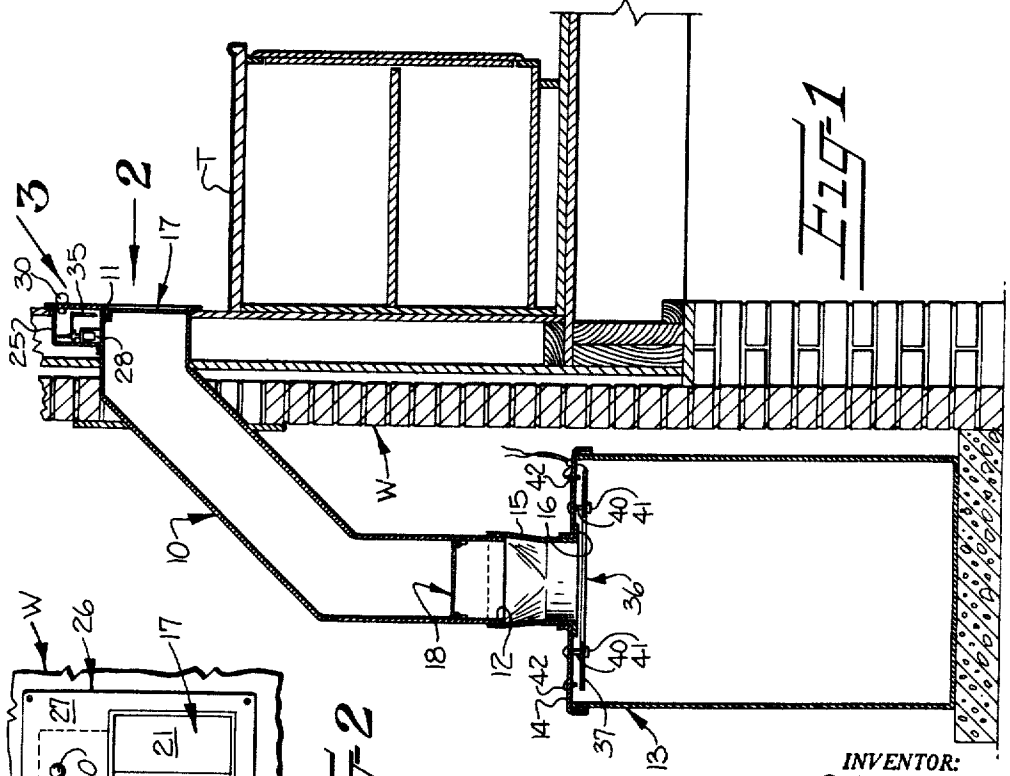

Fig-1

Fig-2

INVENTOR:
HARRY C. FOWLER
and HARRY L. FOWLER, deceased
by (MRS.) CATHERINE Y. FOWLER, executrix
BY Eaton, Bell, Hunt & Sutter
ATTORNEYS

March 2, 1965 H. C. FOWLER ETAL 3,171,447

GARBAGE AND TRASH DISPOSAL DEVICE

Filed April 25, 1962 3 Sheets-Sheet 2

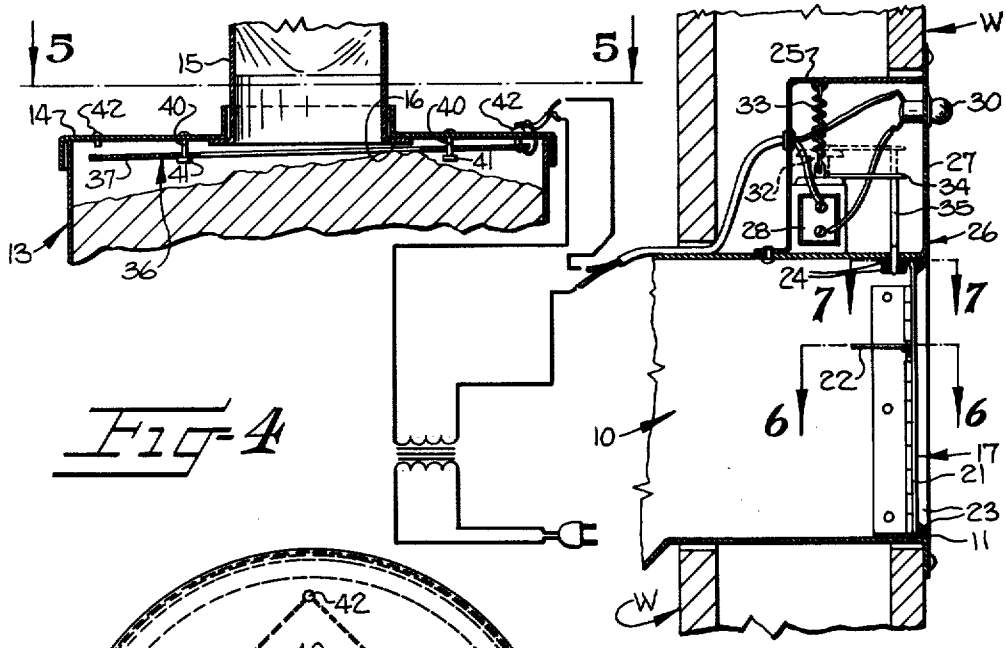

Fig-4

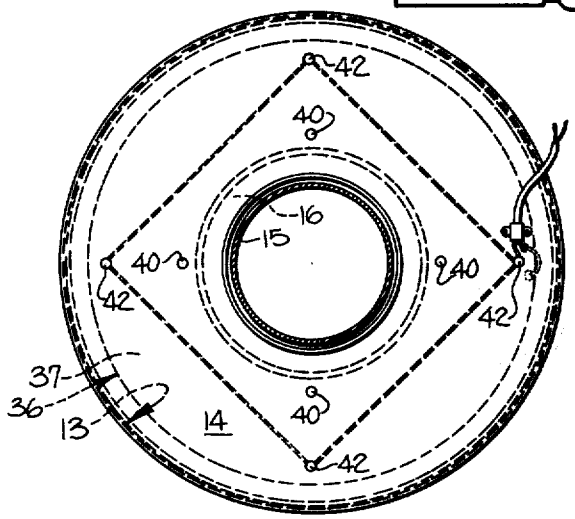

Fig-5

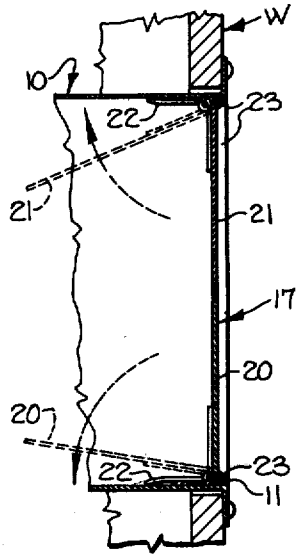

Fig-6

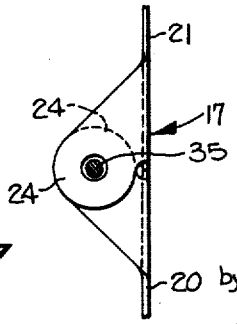

Fig-7

INVENTOR:
HARRY C. FOWLER
and HARRY L. FOWLER, deceased
by (MRS.) CATHERINE Y. FOWLER, executrix
BY Eaton, Bell, Hunt & Deltzer
ATTORNEYS

March 2, 1965 H. C. FOWLER ETAL 3,171,447

GARBAGE AND TRASH DISPOSAL DEVICE

Filed April 25, 1962 3 Sheets-Sheet 3

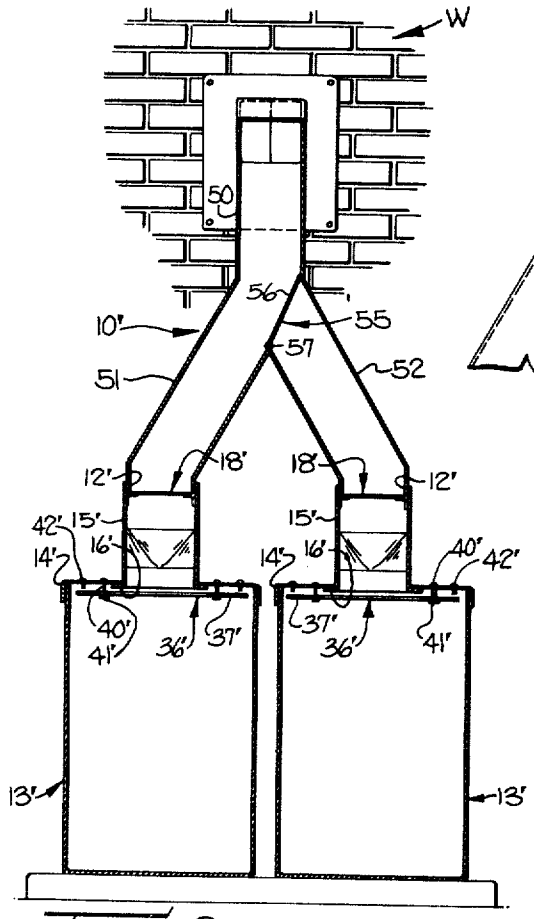

Fig-8

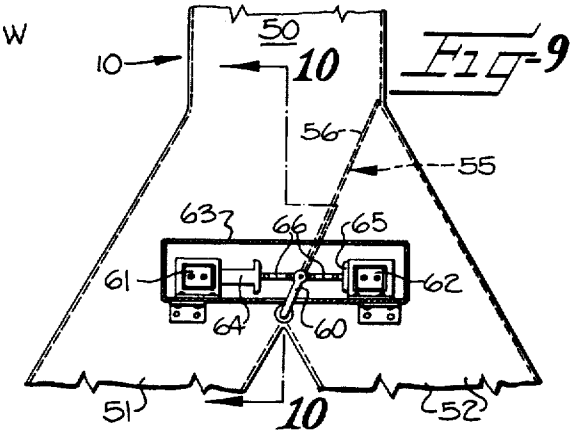

Fig-9

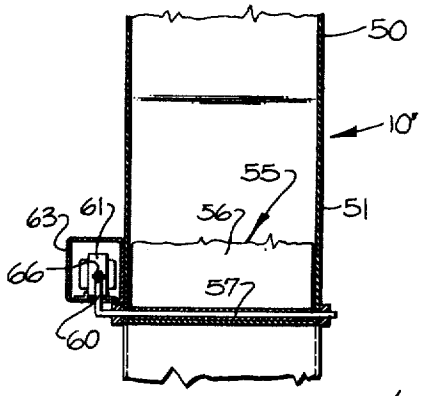

Fig-10

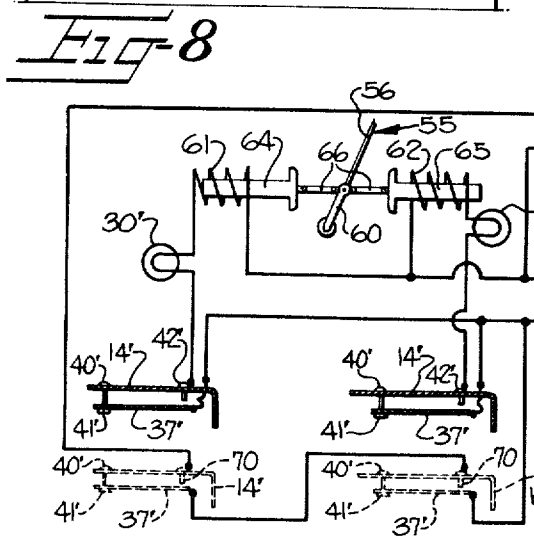

Fig-11

INVENTOR.
HARRY C. FOWLER
and HARRY L. FOWLER, deceased
by (MRS.) CATHERINE Y. FOWLER, executrix
By Eaton, Bell, Hunt & Seltzer
ATTORNEYS

United States Patent Office

3,171,447
Patented Mar. 2, 1965

3,171,447

GARBAGE AND TRASH DISPOSAL DEVICE

Harry C. Fowler, 1939 Thurmond Place, Charlotte, N.C., and Harry L. Fowler, deceased, late of Charlotte, N.C., by Catherine Y. Fowler, executrix, Box 161–F, Rte. 8, Charlotte, N.C.

Filed Apr. 25, 1962, Ser. No. 190,179
9 Claims. (Cl. 141—95)

This invention relates to a new and improved garbage and trash disposal device for installation in the wall of a building, such as a house, so as to extend therethrough to provide for the disposal of refuse material from the interior of the building into a container positioned on the exterior side of the building wall.

Garbage and trash disposal devices of this general type have been proposed heretofore. Such devices provide satisfactory service in instances where a person attending to the disposal of garbage and trash is careful to observe when the container located outside of the building has been substantially filled with refuse material and does not attempt to dispose of additional refuse material by using the device until the container has been emptied. Failure to observe that the container has been substantially filled with refuse material may cause overloading of the container with the result that the excessive refuse material either spills outwardly of the container about the surface on which it stands or backs up in the discharge end of the garbage and trash delivery chute communicating with the container. In the latter case, an attempted removal of the container to empty the refuse material therein is likely to cause the person so engaged in emptying the container to be subjected to the flow of the excessive refuse material backed up in the discharge end of the garbage and trash delivery chute. Such an occurrence would be extremely distasteful to the person involved. Overloading of the container of garbage and trash disposal device of the type described in either instance would contribute to a generally unsanitary condition of the premises about the refuse-receiving container.

It is therefore a primary object of this invention to provide an improved garbage and trash disposal device of the type described which includes a control mechanism associated with a refuse-receiving container disposed on the exterior side of the building wall with the control mechanism being responsive to the filling of the container with refuse material to a predetermined level for actuating an indicator means to inform an attendant that the container should be emptied of refuse material.

It is another object of this invention to provide an improved garbage and trash disposal device of the type described having an operable closure for the inlet end of a chute means through which refuse material is dispensed from the interior of the building into a container positioned on the exterior side of the building wall with a latching mechanism actuatable in response to the filling of the container with refuse material to a predetermined level to lock the closure in covering relation to the inlet end of the chute means for preventing further disposal of refuse material through the chute means until the container is emptied, thereby avoiding an unsanitary overloaded condition of the container.

It is another more specific object of this invention to provide an improved garbage and trash disposal device of the type utilizing a chute means for dispensing refuse material from the interior of a building through a building wall and to a location on the exterior side of the building wall, wherein the chute means includes branch chutes respectively leading to first and second refuse-receiving containers positioned on the exterior side of the building wall for selectively directing refuse material into either of the containers depending upon the position of a valve member alternately movable between positions closing one or the other of the branch chutes. In the latter respect, once the disposal device has been placed in operation with refuse material being discharged from one branch chute into a first container associated therewith, and with the other branch chute being closed by the valve member, upon the first container attaining a substantially filled condition, the valve member is caused to move to a position closing the branch chute associated with the first container and opening the other branch chute to thereafter permit refuse material to be discharged through the other branch chute into the second container associated therewith.

Some of the objects of the invention having been stated, other objects will appear as the description proceeds when taken in connection with the accompanying drawings, in which—

FIGURE 1 is a vertical sectional view taken through the wall of a building equipped with a garbage and trash disposal device in accordance with the present invention;

FIGURE 2 is a fragmentary enlarged end elevational view looking in the direction of the arrow designated 2 in FIGURE 1 and showing the closure for the inlet end of the chute and the indicator panel associated therewith;

FIGURE 3 is a fragmentary enlarged isometric view, with parts being broken away, of the inlet end of the chute looking generally in the direction of the arrow designated 3 in FIGURE 1;

FIGURE 4 is a fragmentary schematic view, partially shown in varied section, of an electrical circuit incorporated in the garbage and trash disposal device of FIGURE 1;

FIGURE 5 is a transverse sectional view taken along the line 5—5 in FIGURE 4;

FIGURE 6 is a transverse sectional view taken along the line 6—6 in FIGURE 4;

FIGURE 7 is an enlarged transverse sectional view taken along the line 7—7 in FIGURE 4;

FIGURE 8 is a vertical sectional view of a modified form of the garbage and trash disposal device in accordance with the present invention, taken along a vertical plane disposed outwardly of the building wall through which the device is installed;

FIGURE 9 is an enlarged, fragmentary front elevational view of the modified form of the garbage and trash disposal device illustrated in FIGURE 8, and showing the juncture between the main chute and the branch chutes diverging downwardly therefrom—a housing mounted across the juncture being shown in vertical section for purposes of clarity to expose a valve regulating mechanism contained therein;

FIGURE 10 is a vertical sectional view taken substantially along the line **10—10** in FIGURE 9; and

FIGURE 11 is a diagrammatic view of the electrical system employed in the modified form of the garbage and trash disposal device illustrated in FIGURES 8–10, inclusive.

Referring more specifically to the drawings, FIGURE 1 illustrates one embodiment of the invention which is installed through the wall W of a building, such as a house, so that garbage and trash may be dispensed from the interior of the building to a refuse-receiving container located on the exterior side of the building wall W permitting convenient removal of refuse material from the premises. In this connection, the garbage and trash disposal device is preferably installed so as to locate its inlet end in the wall W immediately above a counter-top T in the vicinity of a sink, as in the kitchen of a house.

The garbage and trash disposal device comprises a chute **10** which includes an upper end portion providing an inlet **11** for receiving refuse material dispensed thereinto and a lower end portion providing an outlet **12** for discharging refuse material from the chute **10**. A container **13** for receiving refuse material is positioned on the exterior side of the building wall W below the outlet **12** of the chute **10**. It will be observed that the container **13** is provided with a cover **14** having a central opening vertically alined with the outlet **12** of the chute **10**. A connecting sleeve **15** extends between the chute **10** and the container **13**, the upper end of the sleeve **15** being frictionally received about the outlet end of the chute **10** and the lower end of the sleeve **15** being slidably received within the central opening formed in the cover **14** for the container **13**. The lower end of the connecting sleeve **15** terminates in a laterally outwardly extending retainer flange **16** underlying the cover **14** about the central opening formed therein for supporting the cover **14** in a position vertically alining its central opening with the outlet **12** of the chute **10**.

A closure **17** is provided for the inlet **11** of the chute **10**, the closure **17** comprising a pair of door members **20**, **21** respectively hingedly mounted to opposite side walls of the chute **10** at the inlet end thereof for pivotal movement between positions opening and closing the inlet **11**. In this connection, it will be observed in FIGURES 4 and 6 that each of the door members **20**, **21** is provided with a spring member **22** associated with the hinge mounting thereof and having a pair of spring arms extending at right angles to each other in juxtaposition with the corresponding side wall of the chute **10** and the interior surface of the respective door member **20** or **21**. The door members **20**, **21** are normally urged by the spring members **22**, **22** to pivot outwardly with respect to the chute **10** for assuming positions in flush relationship with each other to close the inlet **11** of the chute **10**, as shown in FIGURE 3. In the latter respect, the door members **20**, **21** may be set inwardly of the mouth of the inlet **11**, and a strip of resilient molding material **23** may be installed along the walls of the chute **10** at the mouth of the inlet **11** so as to overlie the outer marginal edges of the door members **20**, **21**. Thus, the strip of molding material **23** serves as a restraining means or bumper to limit the outward pivotal movement of the door members **20**, **21** under the influence of the spring members **22**, **22**, wherein the door members **20**, **21** will assume a flush relationship with each other in closing the inlet **11** of the chute **10**. It will be understood that the door members **20**, **21** are adapted to pivot or swing inwardly upon the application of a force against their outer exposed surfaces overcoming the biasing effect of the spring members **22**, **22**, such as by pushing against the door members **20**, **21**, to open the inlet **11** of the chute **10** for dispensing refuse material thereinto.

A closure **18** similar in structure and in operation to the closure **17** is provided in the chute **10** adjacent the outlet end thereof for preventing the accumulation of

noxious odors from the container **13** having refuse material therein within the chute **10** to avoid the transmission of such odors backwardly through the chute **10** and into the interior of the building when the inlet **11** of the chute **10** is open during use of the device. The closure **18** opens under the weight of refuse material passing downwardly through the chute **10** to permit the refuse material to be discharged from the outlet **12** of the chute **10** through the sleeve **15** and into the container **13**, while returning to a closed position when no refuse material is being dispensed through the chute **10** to prevent the admission of noxious odors from the container **13** to the portion of the chute **10** above the closure **18**.

Referring to FIGURES 3, 4 and 7, it will be observed that a pair of apertured lugs **24** are provided on the door members **20**, **21** along the upper end portions thereof so as to extend inwardly of the chute **10** in stacked relationship with the apertures therethrough being arranged in vertical alinement when the door members **20**, **21** assume a position closing the inlet **11** of the chute **10** for a purpose to be subsequently described.

In accordance with the present invention, an indicator means and a latching means are incorporated in the garbage and trash disposal device—the indicator means informing an attendant when the container **13** is substantially filled with refuse material so that the container **13** can be promptly emptied, and the latching means locking the door members **20**, **21** in a position closing the inlet **11** of the chute **10** at the same time to avoid an overloaded condition of the container **13**. To this end, a housing **25** is mounted in the building wall W so as to face toward the interior of the building, the housing **25** being preferably supported on the chute **10** at the inlet end thereof. In the latter respect, the inlet end of the chute **10** terminates in a laterally extending marginal flange **26** having an enlarged upper border (FIGURES 3 and 4) forming a panel **27** which closes the housing **25**, the marginal flange **26** being suitably secured to the interior surface of the building wall W. The housing **25** contains a solenoid **28** adapted to be energized when the container **13** has been substantially filled with refuse material, as will be subsequently described, to illuminate a light bulb **30** which is mounted in the panel **27** closing the housing **25**, the light bulb **30** extending therethrough so as to be visible from the interior of the building.

It will be observed in FIGURE 3 that the solenoid **28** has a plunger **32** which is held in an extended position with respect to the solenoid housing by a coil spring **33** secured to the plunger **32** and to the top wall of the housing **25**. The solenoid plunger **32** carries an actuator arm **34** extending laterally outwardly of the solenoid **28**. A vertical latching pin **35** is carried by the actuator arm **34** at the end thereof remote from the solenoid plunger **32**, the vertical pin **35** depending below the actuator arm **34** and disposed in vertical alinement with the apertures in the lugs **24**, **24** on the door members **20**, **21** when the door members **20**, **21** are arranged in flush relationship closing the inlet **11** of the chute **10**. As shown in FIGURE 3, when the solenoid **28** is not energized the light bulb **30** will not be illuminated and the plunger **32** will be extended by the spring **33** so as to dispose the actuator arm **34** in an upper position for retaining the vertical pin **35** in a position poised above the lugs **24**, **24** on the door members **20**, **21**.

Means are provided in association with the container **13** to control energization of the solenoid **28** and thereby control the illumination of the light bulb **30** and the actuation of the latching mechanism. The control means takes the form of a load-responsive switch mechanism **36** which includes an electrically conductive annular plate **37** floatingly suspended from the cover **14** within the container **13** by a plurality of non-conducting fasteners depending from the cover **14** and disposed about the central opening therethrough. Each of the non-conductive fasteners comprises a bolt **40** and a nut **41** threadably

received about the lower end of the bolt **40**. The annular plate **37** is provided with a plurality of apertures therethrough loosely receiving the bolts **40**. The nuts **41** threadably received about the lower ends of the bolts **40** are of greater size than the apertures in the annular plate **37** through which the bolts **40** extend so as to retain the annular plate **37** in floating suspended relationship beneath the cover **14** of the container **13**. It will be observed in FIGURES 4 and 5 that the cover **14** is provided with a plurality of electrical contact members **42** protruding below the interior surface thereof in proximity to the annular plate **37**. The electrical contact members **42** are electrically interconnected by respective electrical conductors or wires extending between adjacent contact members **42**.

As the level of garbage and trash accumulated within the container **13** rises in the container **13**, eventually the accumulated refuse material within the container **13** will bear against the lower surface of the floating annular plate **37**. Upon further accumulation of refuse material in the container **13**, it will be understood that the rising level of such refuse material within the container **13** will cause the annular plate **37** to be lifted above the retaining nuts **41** and moved vertically so as to engage at least one of the plurality of electrical contact members **42** protruding from the cover **14**. Upon contact being established between the annular plate **37** and one of the contact members **42**, an electrical circuit is completed which energizes the solenoid **28** drawing its plunger **32** downwardly and illuminating the light bulb **30**. The downward movement of the solenoid plunger **32** carries the actuator arm **34** affixed thereto downwardly to effect downward movement of the pin **35** depending from the actuator arm **34**. Such downward movement of the pin **35** locks the door members **20, 21** in a position closing the inlet **11** of the chute **10**, inasmuch as the pin **35** is received in the apertures formed in the overlapping lugs **24, 24** provided on the door members **20, 21**. The illumination of the light bulb **30** indicates to an attendant that the container **13** on the outside of the building wall W has been substantially filled with refuse material and should be emptied. Additionally, the locked door members **20, 21** closing the inlet **11** of the chute **10** prevent inadvertent use of the chute **10** for discarding refuse material at a time when the container **13** requires emptying to avoid an overloaded condition of the container **13**.

In emptying the container **13**, an attendant raises the cover **14** by sliding it upwardly on the sleeve **15** and removes the container **13** from beneath the cover **14**. Thereafter, the contents of the container **13** are disposed of in a customary manner, and the container **13** is replaced beneath the cover **14**. The act of raising the cover **14** breaks the electrical circuit for the solenoid **28** by spacing the annular plate **37** from the contact members **42** protruding from the cover **14** to de-energize the solenoid **28**. Upon de-energization of the solenoid **28**, the light bulb **30** is extinguished and the spring **33** returns the solenoid plunger **32** to the position shown in FIGURE 3 which raises the pin **35** above the lugs **24, 24** to unlatch the door members **20, 21**—thereby readying the device for subsequent usage.

FIGURES 8–11, inclusive, illustrate a modified form of the garbage and trash disposal device in accordance with the present invention, wherein a pair of refuse-receiving containers are utilized with chute means. Where structural elements similar to those in the previously described form of the invention illustrated in FIGURES 1–7, inclusive, occur in the modified form of FIGURES 8–11, inclusive, these structural elements have been identified by the same reference numerals employed in FIGURES 1–7, inclusive, with prime notations being added thereto. Thus, it will be observed that the modified garbage and trash disposal device of FIGURES 8–11, inclusive, has a chute means **10'** adapted to be installed in the wall W of a building. The chute means **10'** includes a main delivery chute **50** and a pair of branch chutes **51, 52** joined to the main chute **50** and extending downwardly therefrom. The main delivery chute **50** extends from its upper inlet end, which opens into the interior of the building, to a location disposed on the exterior side of the building wall W. There, the main delivery chute **50** is connected to the branch chutes **51, 52** which form a common connecting juncture therewith and diverge downwardly therefrom. The branch chutes **51, 52** are respectively arranged so as to dispose their outlets **12', 12'** above a pair of containers **13', 13'** so as to provide communication between the branch chutes **51, 52** with the interior of the containers **13', 13'** through central openings in the covers **14', 14'** for the containers **13', 13'**—the central openings being vertically alined with the corresponding outlets **12', 12'** of the branch chutes **51, 52**.

In like manner to the form of the invention illustrated in FIGURES 1–7, inclusive, connecting sleeves **15', 15'** extend between the branch chutes **51, 52** and the containers **13', 13'** corresponding thereto with the upper ends of the sleeves **15', 15'** being frictionally received about the outlets **12', 12'** of the chutes **51, 52** and the lower ends of the sleeves **15', 15'** being slidably received within the central openings formed in the covers **14', 14'** for the containers **13', 13'** and terminating in the laterally outwardly extending retainer flanges **16', 16'**.

The containers **13', 13'** are adapted to be alternately used for receiving refuse material depending upon the position assumed by a pivotal valve member **55** which is positioned within the chute means **10'** at the juncture between the main chute **50** and the branch chutes **51, 52**. The valve member **55** is adapted to be movable about a pivotal axis coinciding with the joint formed between the branch chutes **51, 52** between positions alternately opening and closing the branch chutes **51, 52** with respect to the main chute **50** by means to be presently described. Referring to FIGURES 9 and 10, it will be noted that the valve member **55** comprises a pivotal plate **56** rigidly secured along its lower edge to an elongated shaft **57** having a crank arm **60** integral therewith and extending at a perpendicular angle from one end thereof. The elongated shaft **57** of the valve member **55** is appropriately journaled through the walls of the chute means **10'** for oscillatory movement with respect thereto to effect pivotal movement of the plate **56** between positions alternately opening and closing the branch chutes **51, 52**.

The oscillatory movement of the shaft **57** is regulated by means of a pair of spaced apart solenoids **61, 62** disposed on opposite sides of the crank arm **60** and mounted within a housing or casing **63** secured to the exterior of the chute walls so as to extend across the juncture between the main chute **50** and the branch chutes **51, 52**, as shown in FIGURE 9. It will be observed that the spaced apart solenoids **61, 62** are provided with respective solenoid plungers **64, 65** which are connected to each other by suitable linkage **66**. The crank arm **60** extending angularly from the shaft **57** of the valve member **55** is pivotally connected to the linkage **66** intermediate the ends thereof so as to be arcuately movable in response to movement of the respective solenoid plungers **64, 65** between retracted-extended and extended-retracted positions upon energization or de-energization of the solenoids **61, 62** corresponding thereto. It will be understood that arcuate movement of the crank arm **60** in response to energization and de-energization of the solenoids **61, 62**, as will be subsequently described, imparts pivotal movement to the plate **56** through the partial rotation of the shaft **57**, thereby moving the valve member **55** from a position closing one of the branch chutes **51, 52** to a position closing the other of the branch chutes **51, 52**.

Referring to FIGURE 11, an electrical wiring diagram employed with the modified form of the garbage and trash disposal device for controlling movement of the valve member **55** between positions alternately opening and closing the branch chutes **51, 52** with respect to the

main chute 50 and for latching the door members 20', 21' in a position closing the inlet 11' to the main chute 50 is illustrated. In this connection, it will be observed that each of the two containers 13', 13' is associated with its own light bulb 30', 30' to inform an attendant whether one or both of the containers 13', 13' have been substantially filled with refuse material by the illumination of either or both of the light bulbs 30', 30'.

Assuming that the modified garbage and trash disposal device of FIGURES 8–10, inclusive, is placed in operation with both of the containers 13', 13' being in an empty condition, it will be understood that the control means associated with each of the containers 13', 13' and respectively comprising an annular plate 37' suspended beneath the cover 14' in spaced relationship from the plurality of electrical contact members 42' protruding below the interior surface of the cover 14' will interrupt the electrical circuits passing through the solenoids 61 and 62 which determine the position of the valve member 55, thereby de-energizing the solenoids 61, 62. At this time, neither of the light bulbs 30', 30' will be illuminated. It will be further noted that the cover 14' of each of the containers 13', 13' carries another set of electrical contact members 70 separate and distinct from the plurality of electrical contact members 42', the contact members 70 being arranged in a separate electrical circuit for energizing the solenoid 28' associated with the latching mechanism for locking the door members 20', 21' in a position closing the inlet 11' to the main chute 50 of the chute means 10'.

With the valve member 55 being disposed in the position illustrated in FIGURE 8, communication between the main chute 50 and the branch chute 52 will be blocked to prevent the discharge of refuse material through the branch chute 52 of the chute means 10' and into the container 13' corresponding thereto. Accordingly, refuse material will be directed through the main chute 50, the branch chute 51 and discharge through the outlet 12' of the branch chute 51 into the container 13', hereafter referred to as the first container 13', in communication with the branch chute 51. Upon the accumulation of refuse material within the first container 13' to a predetermined level, the movement of the annular plate 37' upwardly into engagement with the electrical contact members 42' and 70 corresponding to the first container 13' is accomplished. The engagement of the electrical contact members 42' with the annular plate 37' completes an electrical circuit through the light bulb 30' corresponding to the first container 13' and the solenoid 61 to energize the solenoid 61 for retracting the solenoid plunger 64. The energization of the solenoid 61 retracting the plunger 64 causes the linkage 66 to be moved toward the solenoid 61, the linkage 66 carrying the crank arm 60 therewith to effect pivotal movement of the plate 56 for placing the valve member 55 in a position opening the branch chute 52 and closing the branch chute 51. Thus, it will be seen that the light bulb 30' corresponding to the first container 13' will be illuminated to inform an attendant that the first container 13' has been substantially filled with refuse material, while the branch chute 51 leading to the first container 13' will be blocked off from the main chute 50 by the valve member 55 to prevent further refuse material from being directed to the first container 13', thereby avoiding an overloaded condition of the first container 13'. At the same time, communication is established between the branch chute 52 and the main chute 50 to allow refuse material to be discharged through the chute means 10' into the second container 13' which acts as an auxiliary container for receiving refuse material when the first container 13' is substantially filled. The electrical circuit through the solenoid 28' is still not completed, however, because the electrical contact members 70 associated with the cover 14' for the other container 13', hereafter referred to as the second container 13', remain out of engagement with the annular plate 37' corresponding thereto.

Normally, the first container 13' is emptied of refuse material at this time to permit the annular plate 37' associated therewith to move downwardly away from engagement with the electrical contacts 42' and 70 on the cover 14' corresponding thereto, thereby breaking the electrical circuit through the solenoid 61 and the light bulb 30' corresponding to the first container 13', and readying the valve member 55 to be returned to a position blocking the branch chute 52 leading to the second container 13' and opening the branch chute 51 when the second container 13' has been substantially filled with refuse material to cause the annular plate 37' associated therewith to engage the electrical contacts 42' and 70 corresponding thereto. In this instance, the light bulb 30' corresponding to the second container 13' will be illuminated and the solenoid 62 will be energized to draw the valve member 55 toward the solenoid 62 for closing the branch chute 52 and opening the branch chute 51, in the same manner previously explained in connection with the energization of solenoid 61.

In normal usage, the electrical circuit for the solenoid 28' will not be completed, since only one of the two actuating switches formed by the respective sets of electrical contacts 70 on the covers 14', 14' with the annular plates 37' corresponding thereto will be closed in a particular instance. Thus, the closure 17' will ordinarily remain unlatched so that the door members 20', 21' may be pushed inwardly to open the inlet 11' to the chute means 10' for delivering refuse material through the chute means 10' into either the first or the second container 13' depending upon which of the branch chutes 51, 52 is in communication with the main chute 50.

Should an attendant fail to empty a container when it has been filled with refuse material, thereby allowing the solenoid 61 or 62 corresponding thereto to remain energized and the annular plate 37' associated therewith to remain in engagement with the electrical contacts 42' and 70 on the cover 14' corresponding thereto, the subsequent filling of the other container by causing the annular plate 37' associated therewith to engage the electrical contacts 70 corresponding thereto will effect the completion of the electrical circuit through the solenoid 28'. The energization of the solenoid 28' draws its plunger 32' downwardly, which carries the actuator arm 34' and the pin 35' depending therefrom downwardly, with the pin 35' being received in the apertures formed in the overlapping lugs 24' 24' on the door members 20', 21'. The door members 20', 21', are accordingly locked in a position closing the inlet 11' of the chute means 10' when both containers 13', 13' have been filled with refuse material to prevent use of the chute means 10' for discarding refuse material at this time, and an attendant must empty at least one of the containers 13' to de-energize the solenoid 28' for releasing the latch on the door members 20', 21' before the chute means 10' can again be employed to discard refuse material.

From the foregoing description, it will be seen that both forms of the garbage and trash disposal device herein disclosed afford a convenient means for disposing of refuse material from the interior of a building into a container located on the exterior side of the building wall, while preventing an unsanitary overloaded condition of the container.

In the drawings and specification there have been set forth preferred embodiments of the invention and, although specific terms are employed, they are used in a generic and descriptive sense only and not for purposes of limitation, the scope of the invention being defined in the claims.

We claim:

1. In a garbage and trash disposal device including a downwardly extending chute for mounting in the wall of a building and having a refuse-receiving inlet at its upper end and a refuse-discharging outlet at its lower

end, and a container below said outlet and having an opening for receiving refuse material therefrom; the combination therewith of

(*a*) closure means movable between positions opening and closing said inlet at the upper end of said chute,

(*b*) latching means operably associated with said closure means for locking said closure means in a position closing said inlet when said container has been filled with refuse material to a predetermined level,

(*c*) means associated with said container and connected to said latching means for controlling the actuation thereof, and

(*d*) said control means actuating said latching means to lock said closure means in the position closing said inlet in response to the filling of said container with refuse material to the predetermined level.

2. In a garbage and trash disposal device including a downwardly extending chute for mounting in the wall of a building and having a refuse-receiving inlet at its upper end and a refuse-discharging outlet at its lower end, and a container below said outlet and having an opening for receiving refuse material therefrom; the combination therewith of

(*a*) means adjacent said inlet at the upper end of said chute for indicating upon actuation thereof when said container has been filled with refuse material to a predetermined level,

(*b*) closure means movable between positions opening and closing said inlet,

(*c*) latching means operably associated with said closure means for locking said closure means in a position closing said inlet when said container has been filled with refuse material to a predetermined level,

(*d*) means associated with said container and connected to said indicator means and said latching means for controlling the actuation thereof, and

(*e*) said control means actuating said indicator means and said latching means to lock said closure means in the position closing said inlet in response to the filling of said container with refuse material to the predetermined level.

3. In a garbage and trash disposal device including a downwardly extending chute for mounting in the wall of a building and having a refuse-receiving inlet at its upper end and a refuse-discharging outlet at its lower end, and a container below said outlet and having an opening for receiving refuse material therefrom; the combination therewith of

(*a*) an electrical circuit,

(*b*) closure means movable between positions opening and closing said inlet,

(*c*) latching means in said electrical circuit and operably associated with said closure means for locking said closure means in a position closing said inlet,

(*d*) switch means in said electrical circuit and being normally open to interrupt said electrical circuit,

(*e*) said switch means being disposed at the top portion of said container and comprising at least one fixed electrical contact member and a movable electrical contact member in spaced relation to said fixed contact member, said movable contact member being adapted to engage said fixed contact member for completing said electrical circuit, and

(*f*) said electrical circuit being completed by movement of said movable contact member into engagement with said fixed contact member in response to the filling of said container with refuse material to the predetermined level to actuate said latching means to lock said closure means in the position closing said inlet.

4. In a garbage and trash disposal device including a downwardly extending chute for mounting in the wall of a building and having a refuse-receiving inlet at its upper end and a refuse-discharging outlet at its lower end, and a container below said outlet and having an opening for receiving refuse material therefrom; the combination therewith of

(*a*) an electrical circuit,

(*b*) means in said electrical circuit for indicating when said container has been filled with refuse material to a predetermined level,

(*c*) closure means movable between positions opening and closing said inlet,

(*d*) latching means in said electrical circuit and operably associated with said closure means for locking said closure means in a position closing said inlet,

(*e*) switch means in said electrical circuit and being normally open to interrupt said electrical circuit,

(*f*) said switch means being disposed at the top portion of said container and comprising at least one fixed electrical contact member and a movable electrical contact member in spaced relation to said fixed contact member, said movable contact member being adapted to engage said fixed contact member for completing said electrical circuit, and

(*g*) said electrical circuit being completed by movement of said movable contact member into engagement with said fixed contact member in response to the filling of said container with refuse material to the predetermined level to actuate said indicating means and said latching means to lock said closure means in the position closing said inlet.

5. A garbage and trash disposal device comprising

(*a*) downwardly extending chute means for mounting in the wall of a building,

(*b*) said chute means comprising an upper main delivery chute having a refuse-receiving inlet at its upper end and a pair of branch chutes joined to said main delivery chute at its lower end,

(*c*) each of said branch chutes having a refuse-discharging outlet at its lower end,

(*d*) a pair of containers corresponding to said branch chutes and positioned below the respective outlets thereof,

(*e*) each of said containers having an opening providing communication between said branch chute corresponding thereto and the interior of said container,

(*f*) valve means in said chute means at the juncture of said main delivery chute and said branch chutes and movable between positions alternately blocking communication between said main delivery chute and each of said branch chutes, said valve means selectively closing one of said branch chutes by blocking communication between said main delivery chute and said one branch chute,

(*g*) means associated with each of said containers and connected to said valve means for controlling the movement thereof, and

(*h*) said control means actuating said valve means in response to the filling of said container corresponding to the other of said branch chutes with refuse material to the predetermined level to move said valve means to a position opening said one branch chute and closing the other of said branch chutes.

6. A garbage and trash disposal device comprising

(*a*) downwardly extending chute means for mounting in the wall of a building,

(*b*) said chute means comprising an upper main delivery chute having a refuse-receiving inlet at its upper end and a pair of branch chutes joined to said main delivery chute at its lower end,

(*c*) each of said branch chutes having a refuse-discharging outlet at its lower end,

(*d*) closure means movable between positions opening and closing said inlet at the upper end of said main delivery chute,

(*e*) a pair of containers corresponding to said branch

chutes and positioned below the respective outlets thereof,

(*f*) each of said containers having an opening providing communication between said branch chute corresponding thereto and the interior of said container,

(*g*) valve means in said chute means at the juncture of said main delivery chute and said branch chutes and movable between positions alternately blocking communication between said main delivery chute and each of said branch chutes, said valve means selectively closing one of said branch chutes by blocking communication between said main delivery chute and said one branch chute,

(*h*) latching means operably associated with said closure means for locking said closure means in a position closing said inlet,

(*i*) means associated with each of said containers and connected to said valve means and said latching means for controlling the movement of said valve means and the actuation of said latching means,

(*j*) said control means actuating said valve means in response to the filling of said container corresponding to the other of said branch chutes with refuse material to the predetermined level to move said valve means to a position opening said one branch chute and closing the other of said branch chutes, and

(*k*) said control means actuating said latching means dependent upon both of said containers being filled with refuse material to the predetermined level at the same time to lock said closure means in the position closing said inlet.

7. A garbage and trash disposal device comprising

(*a*) downwardly extending chute means for mounting in the wall of a building,

(*b*) said chute means comprising an upper main delivery chute having a refuse-receiving inlet at its upper end and a pair of branch chutes joined to said main delivery chute at its lower end,

(*c*) each of said branch chutes having a refuse-discharging outlet at its lower end,

(*d*) a pair of containers corresponding to said branch chutes and releasably connected to the respective outlets thereof,

(*e*) each of said containers having an opening providing communication between said branch chute corresponding thereto and the interior of said container,

(*f*) valve means in said chute means for alternately blocking communication between said main delivery chute and each of said branch chutes, said valve means selectively closing one of said branch chutes by blocking communication between said main delivery chute and said one branch chute,

(*g*) an electrical circuit for each of said containers,

(*h*) means to regulate said valve means for opening and closing said branch chutes alternately, said valve regulating means being disposed in each of said electrical circuits for said containers,

(*i*) each of said electrical circuits including a switch means, said switch means being normally open to interrupt its respective electrical circuit,

(*j*) said switch means being disposed at the top portion of said container corresponding thereto and comprising at least one fixed electrical contact member and a movable electrical contact member in spaced relation to said fixed contact member, said movable contact member being adapted to engage said fixed contact member for completing the respective electrical circuit, and

(*k*) the respective one of said electrical circuits being completed by movement of said movable contact member included therein into engagement with said fixed contact member corresponding thereto in response to the filling of said container corresponding to the other of said branch chutes with refuse material to the predetermined level to energize said valve regulating means for actuating said valve means to open said one branch chute and close the other of said branch chutes.

8. A garbage and trash disposal device comprising

(*a*) downwardly extending chute means for mounting in the wall of a building,

(*b*) said chute means comprising an upper main delivery chute having a refuse-receiving inlet at its upper end and a pair of branch chutes joined to said main delivery chute at its lower end,

(*c*) each of said branch chutes having a refuse-discharging outlet at its lower end,

(*d*) a pair of containers corresponding to said branch chutes and releasably connected to the respective outlets thereof,

(*e*) each of said containers having an opening providing communication between said branch chute corresponding thereto and the interior of said container,

(*f*) valve means in said chute means at the juncture of said main delivey chute and said branch chutes and movable between positions alternately blocking communication between said main delivery chute and each of said branch chutes, said valve means selectively closing one of said branch chutes by blocking communication between said main delivery chute and said one branch chute,

(*g*) an electrical circuit for each of said containers,

(*h*) means to regulate the position assumed by said valve means for opening and closing said branch chutes alternately, said valve regulating means being disposed in each of said electrical circuits for said containers,

(*i*) each of said electrical circuits including a switch means, said switch means being normally open to interrupt its respective electrical circuit,

(*j*) said switch means being disposed at the top portion of said container corresponding thereto and comprising at least one fixed electrical contact member and a movable electrical contact member in spaced relation to said fixed contact member, said movable contact member being adapted to engage said fixed contact member for completing the respective electrical circuit, and

(*k*) the respective one of said electrical circuits being completed by movement of said movable contact member included therein into engagement with said fixed contact member corresponding thereto in response to the filling of said container corresponding to the other of said branch chutes with refuse material to the predetermined level to energize said valve regulating means for moving said valve means to a position opening said one branch chute and closing the other of said branch chutes.

9. A garbage and trash disposal device as defined in claim 8, further including

(*a*) closure means movable between positions opening and closing said inlet at the upper end of said main delivery chute,

(*b*) latching means operably associated with said closure means for locking said closure means in a position closing said inlet,

(*c*) a separate electrical circuit in which said latching means is disposed,

(*d*) said separate electrical circuit including a pair of normally open switch means respectively corresponding to said containers and interrupting said separate electrical circuit,

(*e*) each of said switch means in said separate electrical circuit being disposed at the top portion of said container corresponding thereto and comprising at least one fixed electrical contact member and a movable electrical contact member in spaced relation thereto, and

(*f*) the actuation of said latching means for locking said closure means in the position closing said inlet being dependent upon both of said containers being filled with refuse material to the predetermined level at the same time for completing said separate electrical circuit by movement of said movable contact members included therein into engagement with said fixed contact members corresponding thereto to close said pair of switch means in said separate electrical circuit.

References Cited in the file of this patent

UNITED STATES PATENTS

1,325,602	Albright	Dec. 23, 1919
1,489,938	Hale	Apr. 8, 1924
1,900,907	Buxton	Mar. 15, 1933
2,523,517	Potter	Sept. 26, 1950
3,006,387	Rodemich	Oct. 31, 1961