April 29, 1947. J. P. LAICO ET AL 2,419,572

ELECTRON DISCHARGE DEVICE

Filed April 5, 1944 2 Sheets-Sheet 1

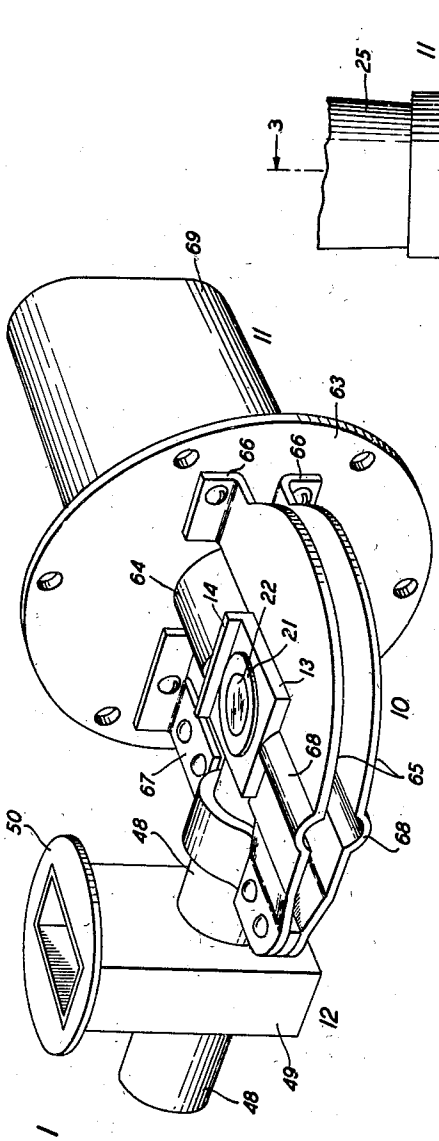

FIG. 1

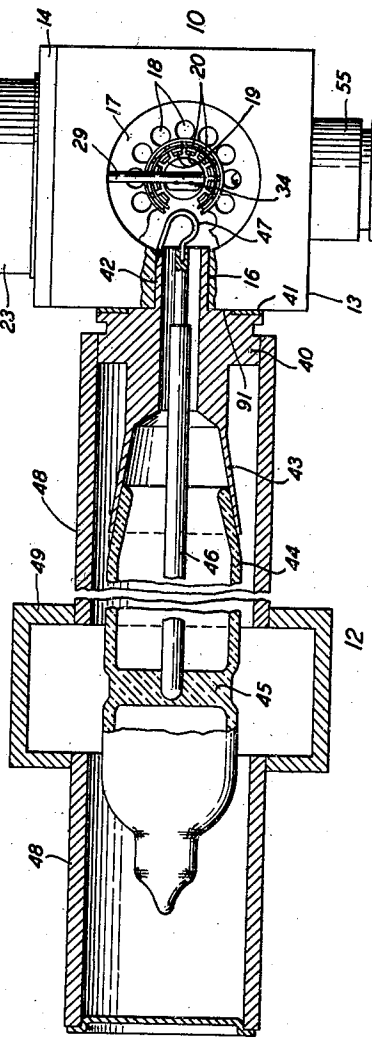

FIG. 2

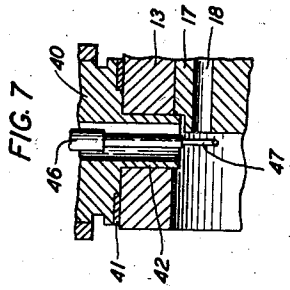

FIG. 7

INVENTORS J. P. LAICO
V. L. RONCI

BY Walter C. Kiesel

ATTORNEY

April 29, 1947. J. P. LAICO ET AL 2,419,572

ELECTRON DISCHARGE DEVICE

Filed April 5, 1944 2 Sheets-Sheet 2

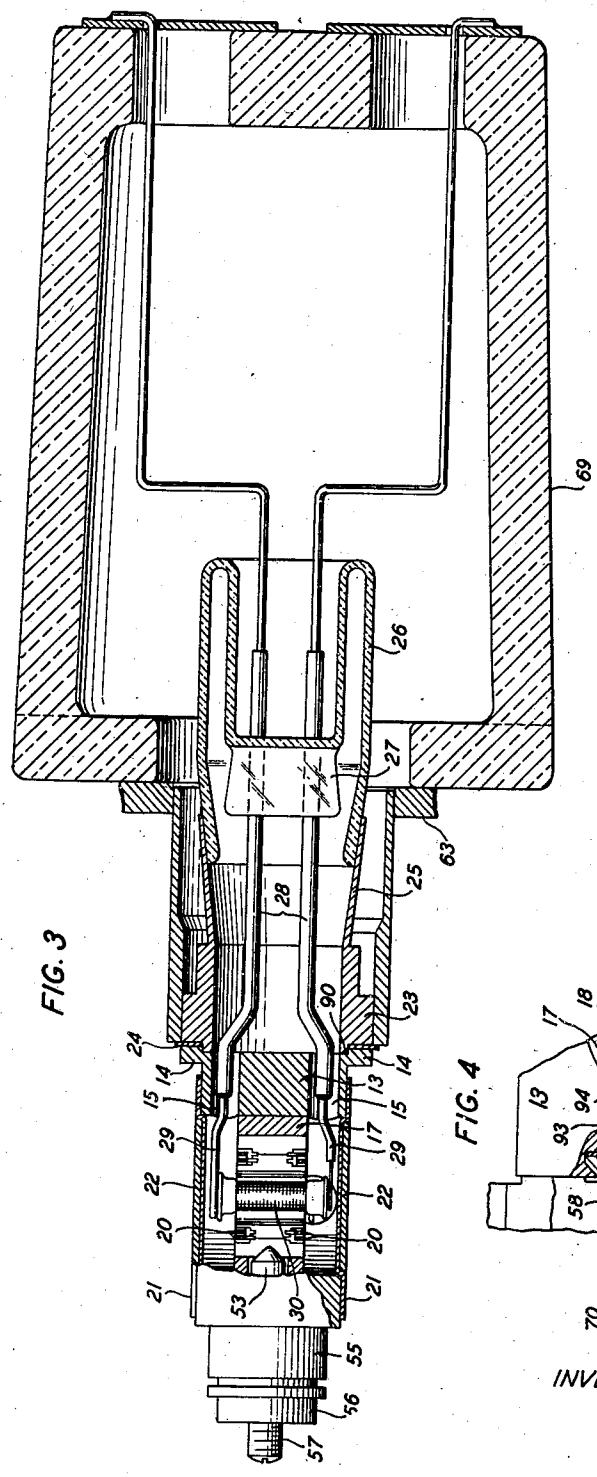

FIG. 3

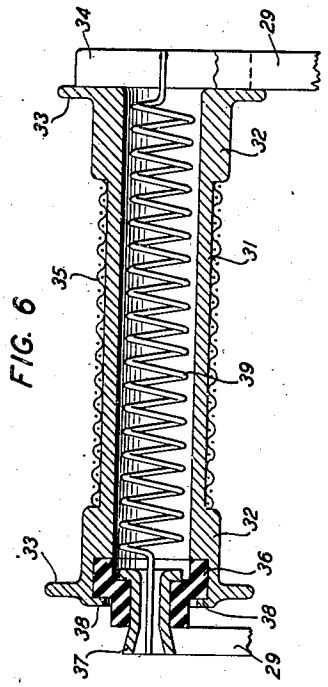

FIG. 6

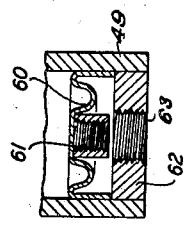

FIG. 5

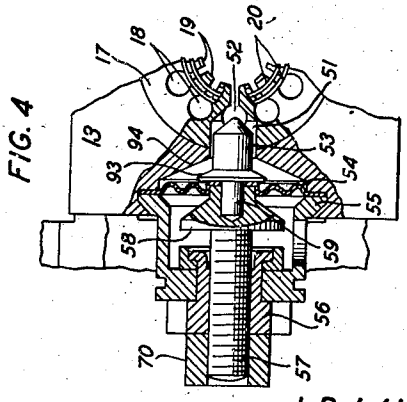

FIG. 4

INVENTORS J. P. LAICO
BY V. L. RONCI

Walter C. Kiesel

ATTORNEY

Patented Apr. 29, 1947

2,419,572

UNITED STATES PATENT OFFICE

2,419,572

ELECTRON DISCHARGE DEVICE

Joseph P. Laico, Springfield, N. J., and Victor L. Ronci, New York, N. Y., assignors to Bell Telephone Laboratories, Incorporated, New York, N. Y., a corporation of New York

Application April 5, 1944, Serial No. 529,598

6 Claims. (Cl. 315—5)

1

This invention relates to electron discharge devices and more particularly to magnetron oscillators operable at ultra-high frequencies.

One object of this invention is to improve the construction of electron discharge devices and, more particularly, to facilitate the assembly and manufacture of ultra-high frequency magnetrons.

In one illustrative embodiment of this invention, a magnetron of the multicavity type comprises a generally cylindrical anode member, a cathode assembly in cooperative relation with the anode member, leading-in conductors for the cathode assembly, and an output element including a coupling or pick-up loop in cooperative relation with the anode.

In accordance with one feature of this invention, the magnetron is fabricated of three unitary assemblies, namely, a main or anode assembly, an input assembly and an output assembly, constructed and arranged so that the parts of each assembly are accurately associated in a desired relation and when the three assemblies are associated with one another, the cooperating elements, particularly the output or coupling loop and the anode member, are in prescribed relation to one another.

In one specific construction, the main or anode assembly comprises a block provided with a pair of external seating surfaces and a central bore in which a multicavity anode member is inserted, the block having therein a pair of apertures extending from points on the central bore adjacent the ends of the anode member to one of the seating surfaces and having a third aperture extending from a point on the bore adjacent one end of the anode member to the other seating surface. The input assembly comprises a coupler adapted to be seated upon and affixed to the one seating surface above-mentioned, a stem carried by the coupler member and cathode leading-in conductors embedded in the stem and positioned thereby so that when the input assembly is joined to the main assembly the leading-in conductors project through the pair of apertures noted above and into proximity to the ends of the anode member. The output assembly includes a second coupler member adapted to be seated upon and affixed to the other seating surface and carrying a stem mounting a linear conductor coaxially with the second coupler, the conductor having a coupling loop at one end thereof. The second coupler member includes a sleeve adjacent and coaxially encompassing the one end of the conductor and adapted to fit within the third aperture in the block, whereby when the output assembly is joined

2

to the main assembly the coupling loop is automatically positioned in a desired relation with respect to the anode member.

In accordance with another feature of this invention, the sleeve upon the coupler member extends into the central bore in the block and the anode member is provided with a portion adapted to laterally abut the extending portion of this sleeve thereby to establish a prescribed spacing between the output or coupling loop and the end of the anode member in juxtaposition thereto.

In accordance with a further feature of this invention, a tubular conductor intersected by a wave guide element is mounted on the second coupler member and positioned thereby in coaxial relation with the conductor carrying the output loop and with the wave guide element accurately related to the end of this conductor remote from the output loop, whereby an accurately coaxial transmission line coupling the operating region within the device to the wave guide member is provided.

The invention, and the above-noted and other features thereof, will be understood more clearly and fully from the following detailed description with reference to the accompanying drawings, in which:

Fig. 1 is a perspective view of an electron discharge device illustrative of one embodiment of this invention;

Fig. 2 is an elevational view of the device shown in Fig. 1 with the heat radiating fins and one end or cover plate of the body assembly removed, and a portion of the input end assembly broken away, the output end assembly being shown mainly in section;

Fig. 3 is a side elevational view of the device, mainly in section along plane 3—3 of Fig. 2;

Fig. 4 is a detail view, mainly in section, of the tuning element associated with the anode in the device illustrated in Figs. 1 to 3;

Fig. 5 is another detail view, in section, showing the tuner element for the output wave guide included in the device;

Fig. 6 is a sectional view, to an enlarged scale, of the cathode assembly included in the device; and

Fig. 7 is a fragmentary sectional view showing details of the association of the anode and the output loop.

Referring now to the drawings, the device disclosed therein is a magnetron oscillator of the multicavity type and particularly suitable for operation at ultra-high frequencies, for example frequencies corresponding to wavelengths of the

order of three centimeters. It comprises basically a main or anode assembly, designated as a whole as 10, an input assembly, designated as a whole as 11, and an output assembly, designated as a whole as 12.

The main or anode assembly, as shown in Figs. 2 and 3, comprises a substantially square metallic, for example, copper, block 13, having flanges 14 on one side thereof and having a central cylindrical bore extending therethrough. The block 13 is provided on one side with parallel bores or apertures 15 and on another side with an accurately located bore or aperture 16. Fitted within the central bore in the block 13 and secured to the block, as by brazing, is a generally annular anode member 17, for example of copper, having therein a plurality of parallel equally spaced, longitudinally extending resonant cavities 18 and having also a plurality of circularly arranged, equally spaced anode segments or elements 19. As shown clearly in Fig. 3, the anode member 17 is of a length substantially equal to the spacing between the bores or apertures 15 and is provided in its faces with recesses in which arcuate conductors or straps 20 are positioned. The conductors or straps 20 are secured in the recesses as in the manner disclosed in the application, Serial No. 529,619 filed April 5, 1944, of James B. Fisk and serve, as disclosed in that application, to determine the oscillating mode of the device.

Secured to the end faces of the block 13, as by brazing, are closure members or discs 21, for example of copper, having a central circular dished portion in which an insert 22 of magnetic material is fitted, the magnetic inserts 22 serving to reduce the reluctance of the flux path for the magnetic field parallel to the axis of the anode member 17, utilized in the operation of the device.

The input assembly comprises a metallic coupler or platform member, for example of copper, having a cylindrical portion 23 seated upon the side of the block provided with the flange 14 and hermetically sealed thereto as by brazing material indicated at 24, and having also a flaring portion 25 to which a vitreous stem 26 having a press 27 is hermetically joined. Sealed in the press 27 are a pair of rigid leading-in conductors 28 which extend into the bores or apertures 15 and have joined thereto metallic supports 29 for a cathode assembly 30 positioned within the anode member 17 and accurately coaxial therewith.

The cathode assembly, as shown clearly in Fig. 6, comprises a cylindrical, metallic cathode member 31, for example of nickel, having enlarged end portions 32 provided with circular flanges 33, one of the end portions having an integral, centrally offset rib 34 thereon. Fitted about the cathode member 31 is a mesh cylinder 35. In the fabrication of the assembly, after the mesh cylinder is fitted in place, a material having good electron emissive characteristics is applied thereto, as by spraying, to form a substantial electron emissive coating, not shown, upon and firmly adherent to the mesh cylinder and to the outer surface portion of the cathode member between the enlarged end portions 32. One enlarged end portion 32 is provided with a recess for receiving a cylindrical insert 36 of insulating material, carrying a metallic eyelet 37, the insert 36 being locked in place by forcing parts 38 of this end portion thereagainst. Disposed coaxially within the cathode member 31 is a helical heater filament 39 coated with an insulating material, the filament having its ends affixed, as by welding, to the fin 34 and eyelet 37.

The output assembly, as shown clearly in Fig. 2, comprises a coupler or platform 40, for example of copper, seated upon one side of the block 13 and hermetically joined thereto as by brazing material indicated at 41. The platform has an integral cylindrical sleeve 42 fitted in the aperture 16 and has also integral therewith a flaring portion 43 to which a bulbous vitreous closure or stem 44 is sealed hermetically. The closure 44 is provided with a transverse wall 45 in which one end of a linear output conductor 46 is embedded, the other end of the conductor 46 being joined to one end of a pick-up loop 47. The conductor 46 may terminate in the wall 45 or extend therethrough. The other end of the loop 47 is affixed, as by brazing, to the cylindrical sleeve 42.

As shown in Fig. 7, an end portion of the anode member 17 is removed and the cylindrical sleeve 42 extends into this portion and is engaged laterally by the anode member. The support 46, when embedded in the transverse wall 45, is held in accurate coaxial relation with the sleeve 42 and the loop 47 is thus fixed with respect to the sleeve. The loop 47 is so formed that when the platform 40 is affixed to the block 13, the loop is parallel to the juxtaposed face of the anode member and substantially coaxial with one of the cavities 18. Inasmuch as the anode member 17 abuts the sleeve 42 it will be appreciated that, when the device is fabricated, the output loop 47 is automatically positioned in accurate, fixed space relation, to the juxtaposed face of the anode member, whereby close and efficient coupling between the loop and the high frequency field within the anode cavities 18 is obtained.

The closure or stem 44 and coupler member 40, 43 are encompassed by a cylindrical metallic member 48 fixed at one end to the coupler member 40 and positioned thereby coaxial with the conductor 46, and intersected by a rectangular wave guide element 49, the latter having a coupling flange 50 thereon at one end and being located so that its longitudinal axis passes through the end of the conductor 46 embedded in the wall 45. When the device is operating, energy from the high frequency field within the device is picked up by the loop 47 and the conductors 46 and 48 are energized accordingly so that high frequency waves are propagated along the wave guide element 49.

In the assembly of the device, the anode member 17 is fixed in the block 13. The metallic member 23, 25, stem 27, leading-in conductors 28 and supports 29 are fabricated into a unitary assembly. Another unitary assembly is constructed of the coupler member 40, 43, closure or stem 45, conductor 46 and output loop 47. These two assemblies are then associated with the block 13, with the sleeve 42 in the aperture or bore 16 and the conductors 28 extending through the apertures or bores 15 and with washers of brazing material 24 and 41 positioned as shown in the drawings. The two assemblies and the block are clamped together in the proper relation, as by a suitable fixture, and the member 23 and coupler member 40 are brazed to the block. The cathode is then held in accurate coaxial relation with the anode segments 19, by a suitable tool, and the supports 29 are welded to the eyelet 37 and fin 34. Finally, the end plates 21 with the magnetic inserts 22 therein, are brazed to the block 13. Alternatively, the cathode may be affixed to the supports 29 before the input and output assemblies are brazed to the block 13. In

either case, it will be appreciated that the construction facilitates and expedites the manufacture of the device in that the input and output assemblies are fabricable as unitary structures with the parts in prescribed relation and in that the output assembly, and more particularly the output loop 47, is automatically positioned by its manner of association with the block 13, in the required relation with the anode member 17.

It will be noted that the space relation determining contact areas between the anode block 13 and the coupler members 23 and 40 are directly metal to metal so that the desired relation of the parts is fixed accurately. Specifically, as seen clearly in Fig. 3, the contact area, indicated at 90, between the coupler 23 and the block 13 is directly copper to copper. Similarly, as indicated at 91 in Fig. 2, the contact between the coupler 40 and the block 13 is directly copper to copper.

In some devices, it is desirable that the cavities 18 be tunable so as to obtain exactly a prescribed operating frequency. One construction for thus tuning the device is illustrated in Fig. 4. As shown in this figure, the anode member 17 is provided intermediate its ends with a recess 51 having a tapered end portion 52 in one of the cavities 18, into which a metallic plug 53 projects. The plug 53 is carried by an annularly corrugated diaphragm 54 fixed to the block 13 by an insert 55 having an internally threaded sleeve 56 affixed thereto. Extending through the sleeve 56 is a screw 57 having an end portion 58 provided with a central aperture for receiving a stem 59 in the plug 53. In the fabrication of the tuner assembly, the sleeve 56 is affixed to the insert 55, as by peening over portions of the inner end thereof, and the insert 55 and diaphragm 54 are brazed to the block 13. Simultaneously with this brazing, the screw 57 is brazed to the stem 59 extending from the plug 53. The sleeve is then rotatable to move the screw inwardly or outwardly to tune the cavity 18 into which the plug projects to the desired frequency. The screw may then be fixed in this position by a lock nut 70 thereon. Limitation of the maximum displacement of the screw 57 to prevent destruction of the parts of the tuner is effected in one direction by the juxtaposed faces of the end portion 58 and the sleeve 56, and in the other direction by the juxtaposed faces 93 of the plug 53 and the tapered portion 94 of the recess 51.

In order to prevent seizing of cooperating parts of the tuner structure due to high temperatures to which they may be subjected during fabrication of the device, the several bearing or contacting surfaces advantageously are of stainless steel to leaded bronze. For example, the sleeve 56 may be stainless steel and the insert 55 of leaded bronze. A particular advantage of this construction is that, because of the different characters of the materials, after heat treatment of the device, a substantially minimum clearance between the sleeve 56 and insert 55 is provided which allows rotation of the sleeve to actuate the screw 57 but assures substantially no play between the sleeve and the insert.

Advantageously, means are provided for adjusting the effective length of the wave guide member 49 to establish a close match between the impedance thereof and that of the coaxial line 46, 48 associated therewith. In one form, illustrated in Fig. 5, such means comprises a diaphragm 60 at one end of the member 49, specifically the lower end thereof in Fig. 1, having its peripheral portion affixed to the member 49 and

mounting an internally threaded detail or nut 61. A disc 62 also is fixed to the member 49 and is provided with a threaded aperture 63 coaxial with the nut or detail 61. To adjust the constants of the wave guide, a suitable tool is threaded into the nut 61 and disc 62 and rotated to move the diaphragm 60 either inwardly or outwardly as may be required. The diaphragm 60 is of a soft metal that distorts and acquires a permanent set readily. When it has been displaced to the desired position, the tool is removed by unscrewing it from the nut 61 and disc 62.

The device may be supported by a mounting plate or disc 63 which encompasses the stem 26 and extends from a cylinder 64 secured to the metallic member 23.

In order to prevent overheating of the anode assembly during operation of the device, cooling fins may be coupled thermally to the assembly. In one form, illustrated in Fig. 1, the fins 65 are plate members of bent form having edge portions thereof fitted in slots in the block 13 and affixed to the mounting plate 63 by flanges 66 and a bracket 67. The fins 65 are provided with oppositely curved portions 68 to allow ready passage therebetween of a tool for adjusting the tuner screw 57.

The stem 26 may be enclosed by a protective cap 69, for example of a vitreous material, mounted upon the supporting plate 63 and carrying terminals, not shown, to which the leading-in conductors 28 are connected.

Although a specific embodiment of this invention has been shown and described, it will be understood that it is but illustrative and that various modifications may be made therein without departing from the scope and spirit of this invention as defined in the appended claims.

What is claimed is:

1. An electron discharge device comprising a block having a pair of external seating surfaces and enclosing an anode member, said block having a pair of apertures extending from one of said seating surfaces to adjacent the ends of said anode member and a third aperture extending from the other of said surfaces to adjacent one end of said anode member, a first assembly comprising a coupler member seated upon said one surface and mounting a pair of leading-in conductors extending through said pair of apertures, a cathode adjacent said anode member and supported by said conductors, and a second assembly comprising a coupler member seated upon said other surface and mounting an output conductor extending through said third aperture into proximity to said anode member.

2. An electron discharge device in accordance with claim 1 wherein said second coupler member comprises a sleeve portion fitted in said third aperture and extending beyond the inner end thereof and said anode member is provided with an end portion abutting said sleeve portion.

3. An electron discharge device comprising a block having a bore extending therethrough and having also an aperture therein communicating with said bore, a coupler member having a sleeve portion fitted in and extending through said aperture, an output conductor mounted by said coupler member, extending through said sleeve portion and having a coupling loop thereon adjacent the inner end of said sleeve portion, an anode member fitted in said bore and abutting said sleeve portion, and a cathode adjacent said anode member.

4. An electron discharge device comprising a

rectangular metallic block having a longitudinal bore extending therethrough, said block having also a pair of apertures extending from said bore to one side surface of the block and a third aperture extending from said bore to a second side surface of the block, a cylindrical anode member fitted in said bore and extending between the inner ends of said pair of apertures, said third aperture extending from adjacent one end of said anode member, a first unitary assembly comprising a coupler member seated on said one surface, a stem carried by said coupler member, and a pair of leading-in conductors sealed in said stem and extending therefrom through said pair of apertures and into said bore, a second unitary assembly comprising a coupler member seated upon said second surface, a stem carried by said second coupler member and an output conductor sealed in said second stem and extending therefrom and coaxially through said third aperture, and a coupling loop adjacent said one end of said anode member and connected to said conductor, a cathode within said anode member and supported by said leading-in conductors, and closure members at opposite ends of said bore and affixed to said block.

5. An electron discharge device comprising a metallic block having a longitudinal bore extending therethrough and having also an aperture extending from said bore to one side surface of the block, an anode member fitted in said bore and having one end adjacent the inner end of said aperture, a cathode adjacent said anode member, a metallic coupler member seated on said side surface having a sleeve fitted in said aperture and an outer cylindrical surface coaxial with said sleeve, a stem secured to said coupler

member, a linear conductor extending coaxially into said sleeve and having its outer end embedded in said stem, a coupling loop adjacent said one end of said anode member and connected to said sleeve and to the other end of said conductor, a tubular member encompassing said conductor and fitted on said outer cylindrical surface, and a wave guide member extending from said tubular member and opposite said outer end of said conductor.

6. An electron discharge device comprising an anode member having a resonant cavity extending longitudinally therethrough and having a laterally extending recess therein communicating with said cavity, a plug member in said recess, a diaphragm secured to said anode member and mounting said plug member, a screw affixed to said diaphragm, a hollow member fixed to said anode member and encompassing said screw, and a sleeve threaded upon said screw and rotatably mounted by said hollow member.

JOSEPH P. LAICO.
VICTOR L. RONCI.

REFERENCES CITED

The following references are of record in the file of this patent:

UNITED STATES PATENTS

Number	Name	Date
2,348,986	Linder	May 16, 1944
2,167,201	Dallenbach	July 25, 1939

FOREIGN PATENTS

Number	Country	Date
509,102	British	July 11, 1939