Nov. 14, 1944. J. H. WOODBERRY 2,362,517

CARTRIDGE ORIENTOR

Filed Nov. 24, 1942 2 Sheets-Sheet 1

Fig. 1.

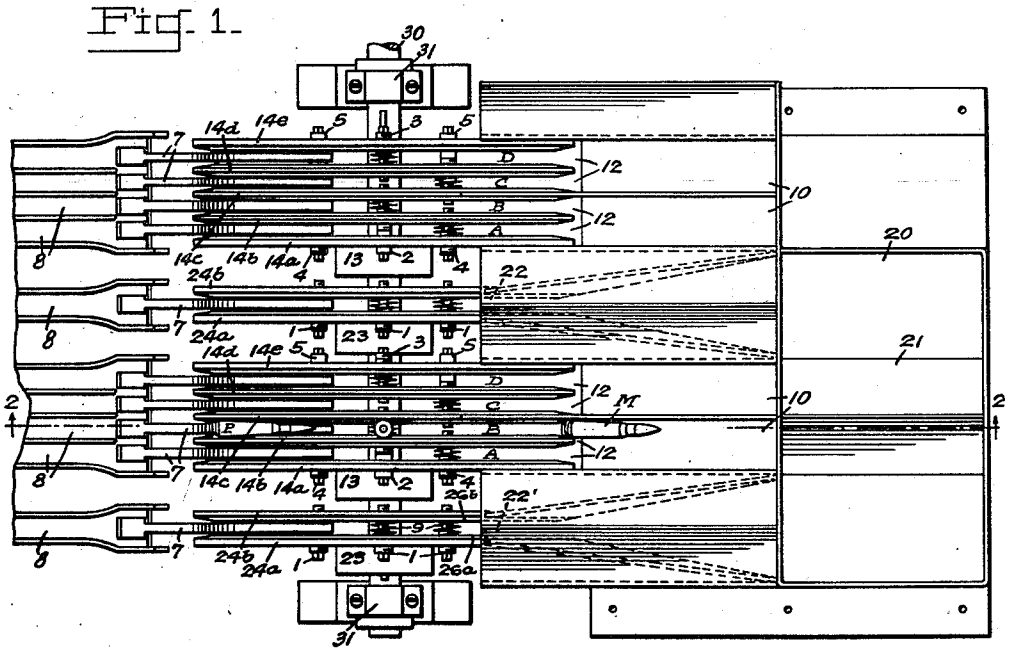

Fig. 2.

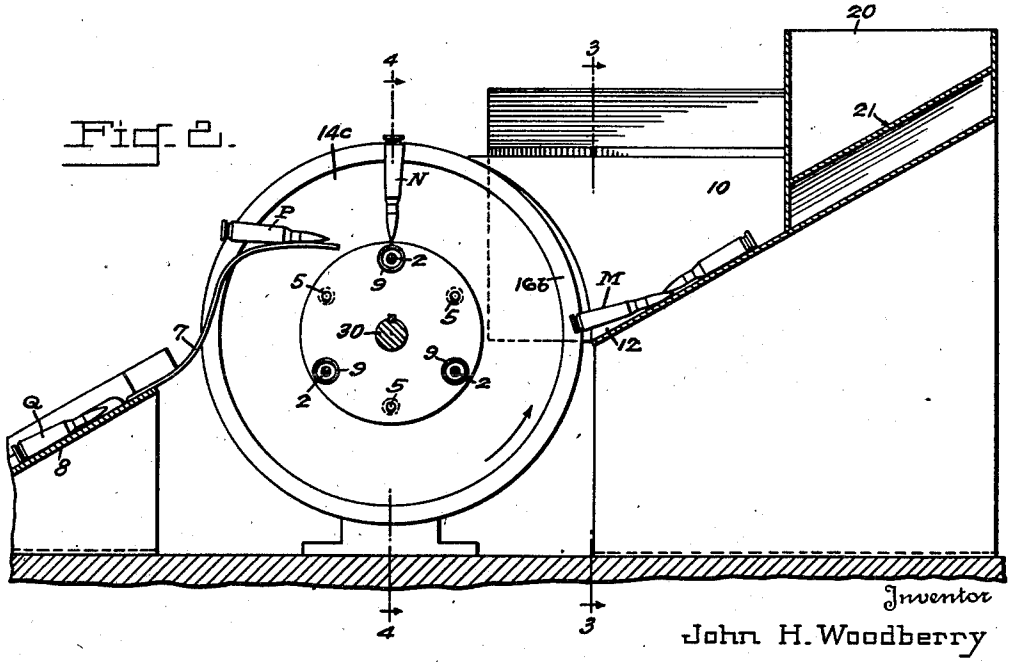

Inventor

John H. Woodberry

By Kenstrom & Thibodeau

Attorneys

Nov. 14, 1944. J. H. WOODBERRY 2,362,517

CARTRIDGE ORIENTOR

Filed Nov. 24, 1942 2 Sheets-Sheet 2

Fig. 3.

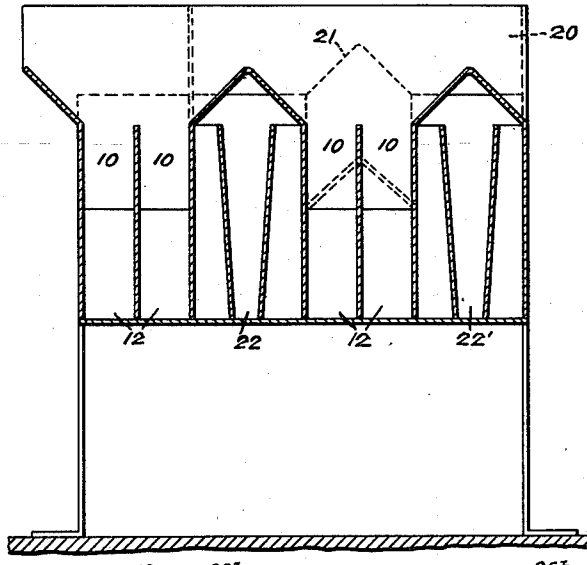

Fig. 4.

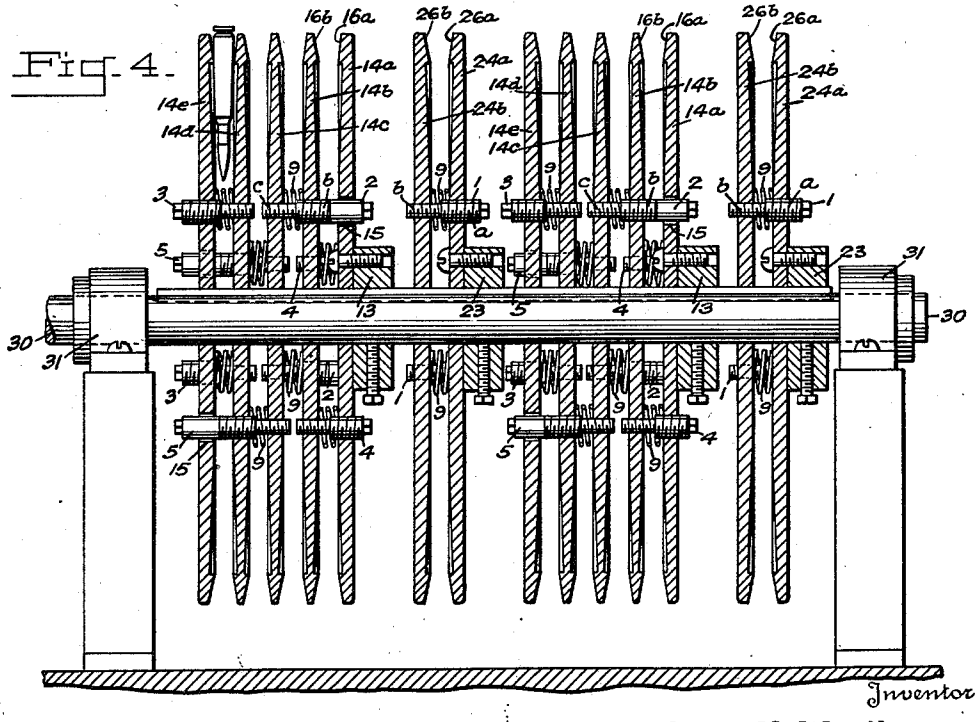

Inventor

John H. Woodberry

By Herrstrom & Thibodeau

Attorneys

Patented Nov. 14, 1944 2,362,517

UNITED STATES PATENT OFFICE

2,362,517

CARTRIDGE ORIENTOR

John H. Woodberry, Metuchen, N. J.

Application November 24, 1942, Serial No. 466,826

6 Claims. (Cl. 198—33)

(Granted under the act of March 3, 1883, as amended April 30, 1928; 370 O. G. 757)

The invention described herein may be manufactured and used by or for the Government for governmental purposes, without the payment to me of any royalty thereon.

This invention relates to apparatus for loading cartridges into belts or other containers and to cartridge handling apparatus in general, the invention being particularly directed to a novel and improved mechanism for orienting the cartridges heaped into a hopper, in a predetermined direction, so that the oriented cartridges may be fed in an orderly sequence in the loading machine. I show one embodiment of my invention in the accompanying drawings, wherein:

Fig. 1 is a top view of the improved orienting mechanism;

Fig. 2 is a side section taken substantially on the line 2—2 of Fig. 1;

Fig. 3 is a section through the hoppers taken on line 3—3 of Fig. 2; and

Fig. 4 is a front section taken substantially on the line 4—4 of Fig. 2.

The improved orienting mechanism of this invention is shown applied to a cartridge loading machine which handles both ball cartridges and tracer cartridges. The tracer cartridges have substantially the same physical characteristics, shape, weight, position of center of gravity, etc., as the ball cartridges. It is standard practice to load the cartridges in the belt or carrier so that every fifth cartridge is a tracer; this is followed in the machine here illustrated. The tracer cartridges are heaped into a single large hopper 20 which is provided with a centrally located inverted-V divider 21 (Figs. 1 and 3) which directs the tracer cartridges to two arteries 22 and 22' (Fig. 1). The ball cartridges are heaped into a plurality, four as shown in the figures (especially Fig. 1), of small hoppers 10. Each hopper is divided into two arteries 12. There being four hoppers 10 and each hopper 10 having two arteries 12, there are in all eight ball cartridge arteries 12; and also, as described above, two tracer cartridge arteries 22. As clearly seen in Fig. 1, the lowermost artery shown on the sheet is tracer artery 22', which is followed by four ball arteries 12, and, next, by the second tracer artery 22, and finally, by the four ball arteries 12.

Spaced a distance from the ends of the arteries (12, 22 and 22') is a shaft 30 journalled at each end in bearings 31 supported on the base of the machine, and provided with a keyway extending the entire or substantially the entire length of the shaft. Near one end of shaft, the right end as shown in Fig. 4, is a collar 23 which is secured to shaft 30, as by a set-screw, Fig. 4, to rotate therewith. Secured to one face of collar 23 (as by screws, Fig. 4) is a rotor 24a. Slidably adjustable on the shaft but feathered to its keyway to rotate therewith is a second rotor 24b which cooperates with non-slidable rotor 24a in a manner to be explained. Means are provided for adjusting the distance between the two cooperating rotors 24a and 24b, which means may be, as best seen in Fig. 4, machine bolts 1 having oppositely cut threads; screw threads *a* are cut in one direction to screw into correspondingly cut tapped holes provided in non-slidable rotor 24a, and screw threads *b* are cut in the opposite direction to screw into correspondingly cut tapped holes provided in slidable rotor 24b. To more securely hold the two rotors in cooperative relation and to facilitate their adjustment, a plurality of such adjusting screws 1 (three, as shown in Fig. 2) are provided and spaced equally around the rotors. A spring 9 is associated with each bolt and interposed between the two cooperating rotors 24a and 24b to eliminate play in the threads.

As best seen in Fig. 1, the center line through the space separating rotors 24a, 24b aligns with the center line of the tracer cartridge artery 22'. Spaced a short distance to the left of rotors 24b, referring to Fig. 4, is a second collar 13 secured to shaft 30 as with set screws supporting a rotor 14a in fixed relation to the shaft. To the left of rotor 14a is rotor 14b which is feathered on the shaft for an extent of axial adjustment by means of a plurality (three, as shown in Fig. 2) of oppositely cut machine bolts 4. As best seen in Fig. 1, the center line between rotors 14a and 14b aligns with the center line of the first ball cartridge artery 12 (also designated A, Fig. 1, or 12A).

To the left of 14b is rotor 14c which is likewise mounted on the shaft for an extent of axial adjustment relative to rotor 14b, by means of machine bolts 2, provided with oppositely cut threads; screw threads *b*, Fig. 4 are cut in one direction to screw into correspondingly cut tapped holes provided in rotor 14b and screw threads *c* are cut in the opposite direction to screw into rotor 14c. Machine bolts 2 (adjusting rotors 14b, 14c) are somewhat longer than machine bolt 1 (adjusting rotor 24a, 24b) by reason of the fact that one end, the right end as viewed in Fig. 4, must extend beyond (rightward) the rotor 14a for accessibility. The rotor 14a is provided with clearance holes 15 for passage of longer bolt 2.

Beyond (leftward in Fig. 4) the rotor 14c are, in order, 14d and 14e. Rotor 14d is adjustably

held to rotor 14c by machine bolts 5, which are similar to bolts 4 in that they are of the long type, to pass through holes 15 provided in end rotor 14c. End rotor 14c is adjustably held to rotor 14d by shorter bolts 3.

The seven rotors thus far described (namely, rotors 24a, 24b and 14a, b, c, d, e) constitute one-half of the rotor assembly, more particularly, the right half as viewed in Fig. 4. The other or left half is precisely the same, the rotors, bolts and other parts bearing the same reference characters as described above in connection with the right half.

As mentioned above, rotors 24a and 24b cooperate together to orient the tracer cartridges coming down artery 22', Fig. 1. For this purpose the outer edge portion of the facing sides of rotors 24a, 24b are provided with a beveled ring, respectively 26a and 26b, oppositely pitched or sloped as best seen in Fig. 4. End rotor 14a and inner rotor 14b cooperate together to orient the ball cartridges coming down artery 12A, Fig. 1. For this purpose, the outer edge portion of the left face (see Fig. 4) of end rotor 14a and the right face of inner rotor 14b, i. e., the two facing sides of 14a, 14b, are provided with oppositely sloped beveled 16a and 16b, respectively. Inner rotor 14b, more particularly, its left face in Fig. 4, cooperates with the right face of inner rotor 14c to orient ball cartridges coming down artery 12B.

The improved orienting mechanism of this invention is designed to orient cartridges heaped disorderly in a hopper, e. g., in hopper 20, Fig. 2, in an orderly manner, with the primer end of the cartridge foremost (on the chute or slide 8, Fig. 2). To accomplish this the shaft 30 and its rotor assembly is rotated in a counterclockwise sense (as viewed in Fig. 2). The cartridges sliding down artery 12, Fig. 2, may be received between a pair of cooperating rotors, more particularly, between their oppositely pitched and facing bevels (26a, 26b, 16a, 16b, 16c, etc.) either with the primer end or the projectile end foremost. The cartridge M in Fig. 2 happens to have its primer end foremost. The bevels of the rotor bear a predetermined relation to the outside diameter of the primer end of the type of cartridge to be handled by the machine, such that, after the rotors have been adjusted by their adjusting bolts 1 to 5, the primer end of a cartridge will be frictionally caught between the cooperating bevels of a facing pair of rotors (see cartridge M, Fig. 2), as the rotors turn in a counterclockwise sense, Fig. 2, a cartridge caught by its primer end (such as the cartridge M), will be carried around by the rotor.

The center of gravity of the type of cartridge to be oriented by the improved mechanism in close to its projectile end, i. e. removed from its primer end. Hence, as the rotor turns counterclockwise, cartridge M pivotally and frictionally held between a pair of cooperative rotors will be turned by gravity in a direction (clockwise, in Fig. 2) to bring the projectile end lowermost (see cartridge N, Fig. 2).

The bevels of the rotor are such that, if the cartridge on artery 12, Fig. 2, reaches the rotors projectile end foremost, the major portion of the cartridge will pass between the pair of facing bevels, until the primer end becomes frictionally held, as in the case of cartridges reaching the rotor primer end foremost, between the pair of rotors. In this case, the cartridge is turned by gravity, in a counterclockwise sense, as viewed in Fig. 2 to bring it vertical, precisely like cartridge N.

The cartridges, held at the top point of the rotors in a vertical position (as is cartridge N, Fig. 2) are removed therefrom and oriented in orderly manner with their primer ends foremost (as are cartridges Q, Fig. 2) by fingers 7 (best shown in Fig. 2) which are secured at one end to the right end of chutes 8. The distal ends of the fingers extend between cooperative pairs of rotors, in a position (as shown in Fig. 2) so that, as the rotors are turned counterclockwise, contact is made with the projectile ends of the cartridges held in the rotor, to turn the cartridge substantially horizontal (as in the case of cartridge P) with its primer end leftmost. Continued turning of the rotor causes the cartridge (e. g., P) to be forced, by contact with finger 7, off the rotor and to gravitate down the finger onto chute 8, its primer end still being left or foremost (as Q, Fig. 2).

I claim:

1. In a device for orienting cartridges with their primer ends pointed in a predetermined direction, the combination of a hopper into which the cartridges are promiscuously heaped, a chute leading from the hopper, a shaft, a disc fixedly mounted on the said shaft to rotate therewith, a disc feathered on the said shaft, the said shaft being disposed to the left of the said chute and substantially level with the end thereof with the said discs close to the said end of the chute, means for rotating the said shaft and discs in a counterclockwise direction, the said discs being provided with a plurality of spaced and aligned holes, the said holes of the respective discs being oppositely tapped, screw bolts provided with oppositely threaded portions screwed into the said aligned holes for adjusting the spacing between the said discs, the inner peripheral portions of the said discs being provided with oppositely shaped bevels adapted to frictionally engage the primer end of a cartridge gravitating down the chute, whereby the engaged cartridge is carried by the said rotating discs, the so carried cartridge turning on its frictionally engaged primer end to a vertically oriented position by force of gravity, a discharge chute leading from the said discs, and a finger secured at one end to the said chute and presenting a distal portion between the said pair of discs adapted to contact the projectile end of the so suspended cartridge to turn the cartridge to a substantially horizontal position with its primer end foremost and to remove the so oriented cartridge from the said pair of discs and to place the removed cartridge on the said discharge chute.

2. In a device for orienting cartridges with their primer ends pointed in a predetermined direction, the combination of a hopper into which the cartridges are promiscuously heaped, a chute leading from the hopper, a shaft, a disc fixedly mounted on the said shaft to rotate therewith, a disc feathered on the said shaft, the said shaft being disposed to the left of the said chute and substantially level with the end thereof with the said discs close to the said end of the chute, means for rotating the said shaft and discs in a counterclockwise direction, means for adjusting the spacing between the said discs, the inner peripheral portions of the said discs being provided with oppositely shaped bevels adapted to frictionally engage the primer end of a cartridge gravitating down the chute, whereby the engaged cartridge is carried by the said rotating discs, the so carried cartridge turning on its frictionally engaged primer end to a vertically oriented position by

force of gravity, a discharge chute leading from the said discs, and a finger secured at one end to the said chute and presenting a distal portion between the said pair of discs adapted to contact the projectile end of the so suspended cartridge to turn the cartridge to a substantially horizontal position with its primer end foremost and to remove the so oriented cartridge from the said pair of discs and to place the removed cartridge on the said discharge chute.

3. In a device for orienting cartridges with their primer ends pointed in a predetermined direction and adapted for use with four closely spaced chutes down which dis-oriented cartridges gravitate, the combination of a shaft rotatively mounted at a point beyond the ends of the said chutes, a disc fixed on the said shaft, a second, a third, and a fourth disc feathered on the said shaft, and a fifth end disc likewise feathered on the shaft, the first end disc and the said second disc, the said second and third discs, the said third and fourth discs, and the said fourth and fifth end disc being provided with spaced aligned holes, the said holes of the respective ones of the said pairs of discs being oppositely tapped, short screw bolts for the said first end disc and second disc, and for the said fourth disc and fifth end disc, and longer screw bolts for the said second and third discs and for the said third and fourth discs, the said bolts being provided with oppositely threaded screws, the said end discs being provided with clearance holes for the said longer bolts, the edge of the said end discs being beveled on their inward faces and the said inner discs being beveled on their both faces.

4. In a device for orientating cartridges with their primer ends pointed in the same direction and for interspersing among them in predetermined order a modified cartridge, a plurality of hoppers, one for containing, promiscuously heaped, the modified cartridges and another for containing similarly heaped unmodified cartridges, a chute leading from each hopper, a plurality of discs mounted for rotation adjacent the chutes and having between them a plurality of spaces to receive the unmodified cartridges, said spaces communicating with the chute for the unmodified cartridges, and two discs similarly mounted adjacent the modified cartridges chute and spaced to receive said modified cartridges and communicating with the modified cartridge hopper, the inner peripheral faces of all of the discs being provided with facing bevels for frictionally engaging the primer end of the cartridges to cause them to be brought, by gravity, to vertically orientated position and means for removing the cartridges from between the discs with their primer ends pointed in the same direction.

5. The invention of claim 4 characterized in that there are delivery chutes adjacent the discs and provided with fingers extending between the discs and constituting means for removing the cartridges from between said discs.

6. The invention of claim 4 characterized in that the delivery chutes are provided with grooves for conveying the cartridges away from the machine in separated rows.

JOHN H. WOODBERRY.