F. H. CHAVARRIA.

DRIP CUP FOR UMBRELLAS.

APPLICATION FILED APR. 16, 1913.

1,068,566. **Patented July 29, 1913.**

Fig. 1

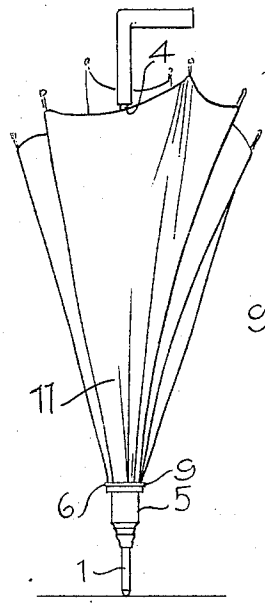

Fig. 2

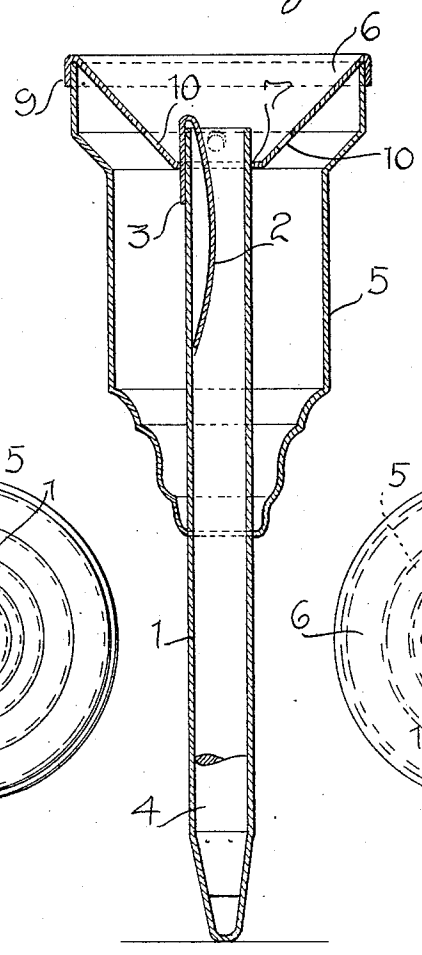

Fig. 3

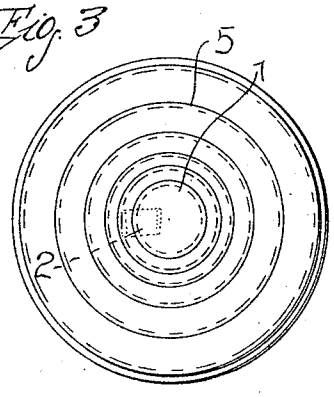

Fig. 4

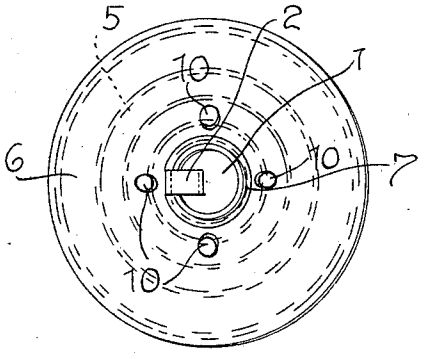

Inventor

FRANK. H. CHAVARRIA

Witnesses

Robert M. Sutphen

A. L. Hind.

By Watson E. Coleman

Attorney

COLUMBIA PLANOGRAPH CO., WASHINGTON, D. C.

UNITED STATES PATENT OFFICE.

FRANK H. CHAVARRIA, OF SAN JOSE, CALIFORNIA.

DRIP-CUP FOR UMBRELLAS.

1,068,566. Specification of Letters Patent. Patented July 29, 1913.

Application filed April 16, 1913. Serial No. 761,524.

To all whom it may concern:

Be it known that I, FRANK H. CHAVARRIA, a citizen of the United States, residing at San Jose, in the county of Santa Clara and State of California, have invented certain new and useful Improvements in Drip-Cups for Umbrellas, of which the following is a specification, reference being had to the accompanying drawings.

This invention comprehends certain new and useful improvements in umbrellas and relates more specifically to attachments for the same.

An object of the invention is to provide an attachment for umbrellas which may be readily placed in position or removed and which will serve to catch and retain all water dripping from the cover after the umbrella has been closed.

Another object is to provide a device of this character which will be of extremely simple construction and which may be readily applied to the end of umbrellas of the type now in general use without altering the construction of the same.

A further object is to provide a device of this character which will be composed of the minimum number of parts, and which will be provided with a cover of such construction as to prevent the water from escaping from the cup while the attachment is in position upon the umbrella and which will be highly efficient and effective in use.

Another object is to generally improve and simplify the construction of a device of this character and increase the efficiency of the same and at the same time reduce the cost of manufacture thereof.

With the above and other objects in view, my invention consists in certain novel constructions, combinations and arrangements of parts to be hereinafter more fully described, claimed and illustrated in the accompanying drawing, in which,

Figure 1 is an elevational view of an umbrella of conventional form with my improved drip cup attachment applied thereto; Fig. 2 is an enlarged longitudinal section through the drip cup attachment, showing the tip of the umbrella stem in position, the remainder of the stem and the umbrella being broken away; Fig. 3 is a bottom plan view of the drip cup attachment; and Fig. 4 is a top plan view of the same.

Referring more specifically to the drawing in which similar reference characters designate corresponding parts throughout the several views, 1 designates a tube which is closed at its inner end and which is adapted for removable engagement upon the bottom of the umbrella stem and adapted to be retained in position by means of the curved leaf spring 2 which has one end projecting out of the open end of the tube 1, and bent back and secured to the outer face of the same as shown at 3, it being understood that the main or curved portion of the spring is within the tube and adapted to bear against the umbrella stem 4, it being further understood that the tube 1 is of such diameter as to cause the umbrella stem 4 to bend and flatten or straighten the curved portion of the spring 2 as it enters the tube, thereby causing the spring to bind tightly against the umbrella stem and retain the attachment in position upon the same.

Secured upon the tube 1 near its upper or bent end is the cup 5 which has its wide upper end bent and projecting beyond the open upper end of the tube 1, the purpose of which will presently appear. The cup 5 is closed by means of the concave cover 6 which has a circular central opening 7 to accommodate the upper end of the tube 1 and a notch 8 in the edge of the central opening 7 to accommodate the bent back end of the spring 2, thereby forming a tight connection around said end of the tube 1 to prevent water from escaping from the cup 5 at this point, should the attachment be tilted or turned upon its side when the cup 5 contains water. The outer edge of the cover 6 is turned back, as shown at 9, around the outer edge of the cup 5, thereby forming a water tight connection around the edge of said cup. The cover 6 is provided with a plurality of small openings 10 in its concave portion, by means of which the water dripping from the cover 11 of the umbrella may drop into the cup 5, as will be clearly understood.

It will also be understood that any of the parts of this device may be made of any suitable material and while I have shown the preferred form of my invention, it will be understood that minor changes in the details of construction of the device may be made within the scope of the appended claims without departing from the spirit of my invention.

What I claim is:—

1. A removable drip cup for umbrellas

comprising a closed tube, a cup positioned around the tube, a concave cover for the cup having its edge bent back and engaged over the edge of the cup while the tube projects through the center of said cover, the cover being also provided with suitable perforations in its concave portion, and means carried by the tube for retaining the same in position upon an umbrella stem.

2. A drip cup for umbrellas comprising a tube having a closed end and an open end, a cup engaged around the tube and projecting beyond the open end of the latter, a concave cover engaged over the open end of the cup and having a central opening to accommodate the open end of the tube, and a spring within the tube and having one end extended beyond the open end of said tube and bent back and secured to the outer face of the same within the cup, said cover being also provided with a notch in the edge of its central opening to accommodate the end of the spring and a plurality of openings in its main portion to allow water to drip from the cover into the cup.

In testimony whereof I hereunto affix my signature in the presence of two witnesses.

FRANK H. CHAVARRIA.

Witnesses:
FRANK L. FEIST, Jr.,
GEO. W. HADLEY.

Copies of this patent may be obtained for five cents each, by addressing the "Commissioner of Patents, Washington, D. C."