Oct. 2, 1923. 1,469,590

C. G. PALMER

GRAVITY LATCH

Filed Sept. 30, 1922

Fig. 1.

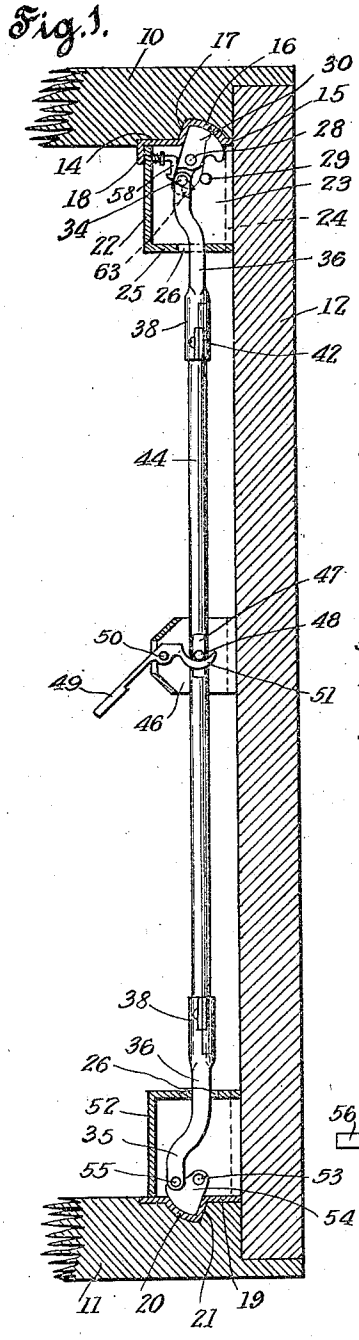

Fig. 2.

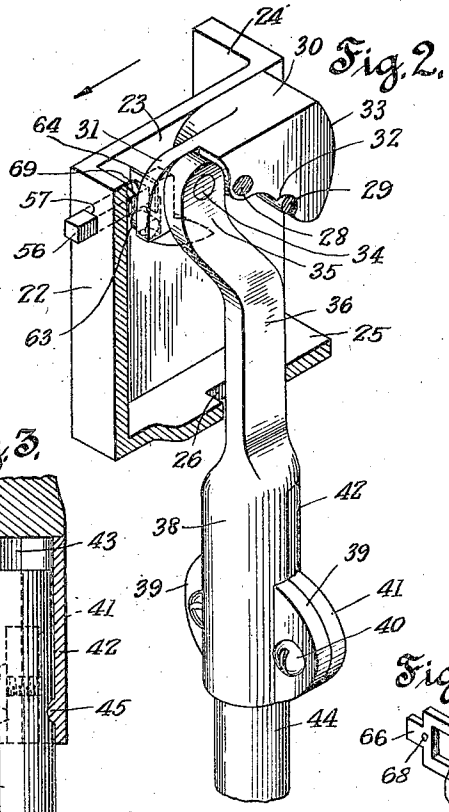

Fig. 3.

Fig. 5.

Fig. 4.

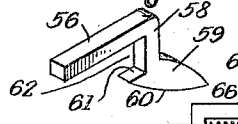

Fig. 6.

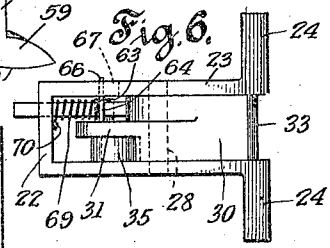

Fig. 7.

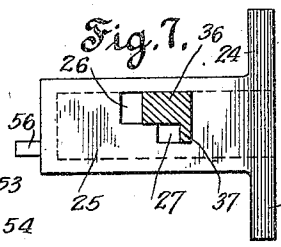

INVENTOR

Charles G. Palmer

BY Frank C. Fischer

ATTORNEY

Patented Oct. 2, 1923. 1,469,590

UNITED STATES PATENT OFFICE.

CHARLES G. PALMER, OF NEWARK, NEW JERSEY.

GRAVITY LATCH.

Application filed September 30, 1922. Serial No. 591,437.

To all whom it may concern:

Be it known that I, CHARLES G. PALMER, a citizen of the United States, residing at Newark, in the county of Essex and State of New Jersey, have invented new and useful Improvements in Gravity Latches, of which the following is a specification.

This invention relates to improvements in door latches and particularly to types used in connection with fire proof doors whereby the same becomes automatically locked when closed.

One of the objects of this invention is to provide a gravity operable device for actuating the latch bolts into locking position and a single releasing lever for disengaging the same.

Another purpose is to produce a device in which the operating bar is adjustably and securely clamped to the bolt actuating member, thus permitting varying length of bars to be used and facilitating the assemblage.

A further aim is in the provision of means for maintaining the locking bolts or latches in an inoperative position at will.

In addition to these several aims and purposes, a further object has been in the production of a gravity latch bolt which is unusually simple in construction, efficient in operation, and comparatively inexpensive in construction.

With these ends in view, the invention consists in certain novelties of construction and arrangement of parts hereinafter described and shown in the accompanying drawing, forming a material part of this disclosure, and in which:—

Figure 1 is a vertical sectional view of a door and portion of its frame, provided with an embodiment of the improved gravity latch bolt, its housing, keeper and lever mounting also being shown in section.

Figure 2 is a perspective view of the upper latch bolt and its associated parts, the housing being broken away and the parts shown in their released or unlocked position.

Figure 3 is a fragmentary sectional view of the operating bar and lock bolt actuator clamp shank.

Figure 4 is a perspective view of the latch bolt interceptor.

Figure 5 is a similar view of the interceptor guide plate.

Figure 6 is a top plan view of the upper latch, its housing and allied parts.

Figure 7 is a bottom plan view of the same, the actuator shank being shown in section.

In Figure 1 of the drawing a conventional type of door frame is indicated, comprising an upper joint 10 and sill 11 against which the door 12 is shown in closed position.

A metal keeper 14 is set into the lower front corner of the frame element 10, the keeper presenting a substantially level lower surface, including the entrance end 15 and having an arcuately recessed portion 16 terminating in an angular stop element 17, a down turned flange 18 extending vertically below its main body 14.

Similarly set in the frame element 11 is another keeper 19 having an oppositely disposed curved recess 20 and angular stop wall 21; each of these keepers are firmly secured in fixed position on their respective supports.

Fixed to the inner side of the door 12, near the upper front corner is a generally rectangular, hollow casing having closed front and side walls, respectively 22 and 23, the latter having outstanding lateral flanges 24 by which the housing is secured to the door.

The upper end of the casing is fully open and formed through the bottom wall 25 are communicating openings 26 and 27, the back being also open as shown.

Fixed in the side walls to extend from side to side are pins 28 and 29 and pivoted on the pin 28 is a latch bolt 30 by its attenuated lever 31 the under edge of which makes contact with the step pin 29 when the latch is raised, said pin also acting as a stop when the latch 30 is lowered, at that time engaging in the recess 32.

The outer end 33 of the latch is curved on a radius from the axis 28 to suit the correspondingly shaped recess 16 of the keeper and its flat tangential edge is suited to engage the keeper wall 17 when in operative position, and to rest level with the upper edge of the housing sides 22 when in an inoperative or unlocked position.

A pin 34, set in the lever element 31, is pivotally engaged in an offset extension 35 formed with the actuator 36, the same passing freely through the opening 26 in the bottom of the housing and a rib 37, on the actuator shank operates as a key in the opening 27.

The lower part of the actuator shank is expanded to constitute a clamp element 38 and provided with outstanding lugs 39

through which pass screws 40 clamping corresponding lugs 41 formed with a cap 42 fitting the element 38 to constitute a cylindrical head.

Bored equally in the elements 38 and 40 is an opening 43 closely fitting the operating bar 44, which may be further secured therein by an inreaching, key-like element 45 formed on the inner convex surface of the clamping cap 42, said element 45 entering a corresponding depression in the surface of the bar after trial and prior to final assemblage.

The bar 44 is guided in a housing 46 fixed on the inner side of the door at a convenient height, and flattened, as at 47, a pin 48 passing through the flattened portion to extend equally out on both sides.

A lever having an extending manually operable handle 49, is pivoted on a pin 50 fixed in the housing 46, the inner end of the lever being formed to present a curved, hook-like fork 51 engaging the extending ends of the pin 48, in such a manner that when the lever 49 is depressed the bar 44 will be raised and through its connection, the latch 30 withdrawn from the keeper 14.

Another casing 52 is secured to the bottom of the door in register with the upper casing, the same having a pivot pin 53 on which is pivoted another latch bolt 54 of the same general character as the upper latch except the projecting lever is omitted and the actuator is pivoted on a pin 55 fixed directly in the body of the latch at a distance from its axis ensuring a full rising movement coincident with a corresponding lowering movement of the upper latch.

From the foregoing it will be seen that actuation of the hand lever 49 will cause instant disengagement of both latch bolts and it will be evident that the weight of the bar 44 is such as to normally cause both latches to enter their keepers and be retained therein.

Attention is also called to the fact that no springs, weights, counter-balances or knobs are used, and also to the freedom from links or other complications, the connection between the bar and latches being essentially direct and gravity only used in the operation of locking.

It will also be apparent that when the door is brought into contact with the frame, the latch face 30 will, if upstanding, make contact with the forward end 15 of the upper keeper and thus be caused to turn upon its pivot until fully entered, thereafter rising automatically into a locked or engaged position.

It will become evident that the bar 44 may be continued in length and the attachment at its lower end, together with the keeper 19 may be omitted, the bar, in that case, entering a suitable opening in the floor or frame of the door direct.

In addition to the foregoing means are provided for maintaining the upper latch bolt, and hence the lower as well, in a level position, with reference to the casing walls 22, said means consisting of a detent or retainer composed of a square shank 56 adapted to slide in an opening 57 in the front wall 22 of the casing, the shank having a downwardly extending angular portion 58 leading to a head 59.

Said head has a curved cam profile 60 and a hook element 61 below the bar 56, the space 62 being receptive of a projection 63 formed with or attached to the lever element 31, the pin normally riding on the surface 60.

Fixed on the square shank 56 is a plate 64 having a central opening 65 brazed to the bar and provided with a lug 66 extending through a slot 67 appropriately formed in one of the side walls 23 of the casing, the plate having a perforation 68 in which is secured one end of a pull string 69, the other end of which is fixed, as at 70, to the inner surface of the front wall 23 of the casing.

From the foregoing it will be seen that the detent is normally drawn outwardly by the spring and that the projection 63 is held in the space 62, thus holding the latch in a level, inoperative position.

Upon closing the door, the extending end of the shank 56 is brought into forcible contact with the flange 18 of the keeper 14, thus releasing the latch, which will instantly rise by gravity and engage in the keeper recess.

From the foregoing it will be seen that a simple device for this purpose has been disclosed in the preferred form of its embodiment, but it is not desired to restrict the details to the exact construction shown, it being obvious that changes, not involving the exercise of invention, may be made without conflicting with the scope of the appended claims.

Having thus described by invention, what I claim as new and desire to secure by Letters Patent, is:—

1. The combination with a door and its frame, of a bar mounted on the door, a hand lever operatively engaging said bar, housings secured on the door, keepers fixed in the frame thereof, latches pivoted in said housings, said latches being engageable in said keepers, and direct operative connections between said bar and said latches.

2. The combination with a door and its frame, of a vertical bar slidably mounted on said door, means for manually raising said bar, said means being pivoted on the door, housings secured on the door, latch bolts pivoted in said housings, keepers fixed in the frame of the door receptive of said latch bolts, when turned into engaging posi-

tion, and direct operative connections between the ends of said bar and the bodies of said latch bolts whereby the latter are actuated by the bar due to weight thereof.

3. The combination with a door and its frame, of a gravity operating bar slidable vertically on said door, a pivoted lever for raising said bar, a housing, a pivoted latch bolt therein directly connected with the bar, a keeper receptive of said bolt, and means on said keeper for depressing said bolt when entering said keeper.

4. The combination with a door and its frame, of a vertical bar slidably mounted on said door, means for manually raising said bar, said means being pivoted on the door, housings secured on the door, latch bolts pivoted in said housings, keepers fixed in the frame of the door receptive of said latch bolts, when turned into engaging position, direct operative connections between said bar and said latch bolts, and means for adjustably securing said connections to said bar.

5. The combination with a door and its frame, of a vertical bar slidably mounted on said door, means for manually raising said bar, said means being pivoted on the door, housings secured on the door, latch bolts pivoted in said housings, keepers fixed in the frame of the door receptive of said latch bolts, when turned into engaging position, connections pivoted to said latch bolts, and clamp elements formed with said connections adjustably engaging said bar at points variable with respect to its ends.

6. The combination with a door and its frame, of a vertical bar slidably mounted on said door, means for manually raising said bar, said means being pivoted on the door, housings secured on the door, latch bolts pivoted in said housings, keepers fixed in the frame of the door receptive of said latch bolts, when turned into engaging position, connections pivotally engaging said latch bolts, clamps formed with said connections adjustably engaging said bar, and means carried by said clamps cooperative with notches in the bar whereby the latter is rigidly held when in adjustment.

7. The combination with a door and its frame, of a gravity operating bar slidable vertically on said door, a pivoted lever for raising said bar, a housing, a pivoted latch bolt therein directly connected with the bar, said bolt being normally held in an extended position, a keeper receptive of said bolt, and means for retaining said bolt in a retracted position until after the door has been fully closed within its frame.

8. The combination with a door and its frame, of a gravity operating bar slidable vertically on said door, a pivoted lever for raising said bar, a housing, a pivoted latch bolt therein operatively engaged with the bar, whereby it is normally held in an extended position, a keeper fixed in the frame receptive of said bolt, a flange extending downwardly from said keeper, a lateral projection on said bolt, a detent slidable in said housing, said detent having a part extending outwardly to contact with said flange, a spring operating to extend said detent, and a hook formed with said detent adapted to engage said projection until the detent projection is forced in by said flange allowing said latch to rise and enter said keeper.

9. The combination with a door and its frame, of a gravity operating bar slidable vertically on said door, a pivoted lever for raising said bar, a housing, a pivoted latch bolt therein operatively engaged with the bar, whereby it is normally held in an extended position, a keeper fixed in the frame receptive of said bolt, a detent slidably located in said housing adapted to retain said bolt in a retracted position, means normally retaining said detent in operative position, and means combined with said keeper for releasing said detent permitting the bolt to be received in the keeper, said means becoming operable upon the full closing of the door.

This specification signed and witnessed this 29th day of September, 1922.

CHARLES G. PALMER.

Witnesses:
FREDK. C. FISCHER,
F. NOLL.