Dec. 22, 1942. R. H. SWAISGOOD 2,306,194

X-RAY MACHINE

Filed Sept. 17, 1940 6 Sheets-Sheet 1

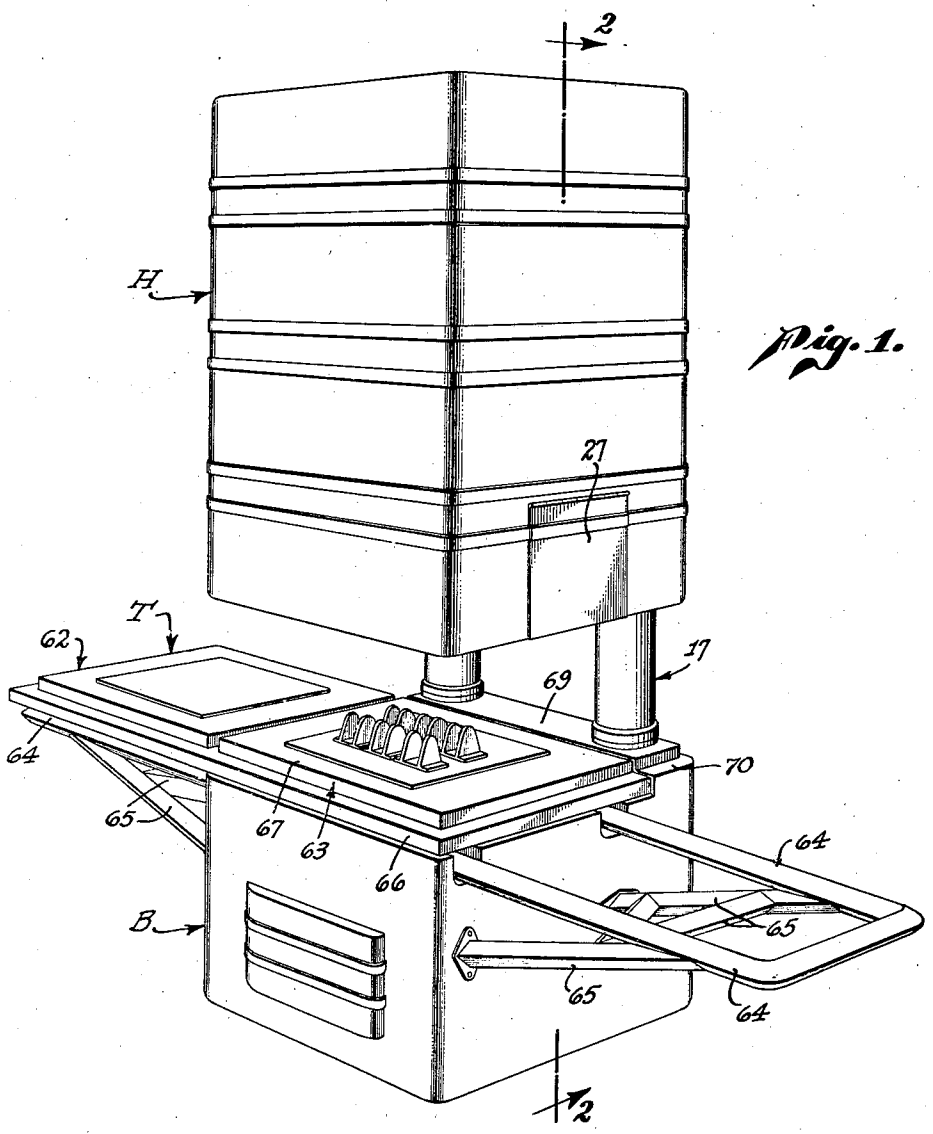

Fig. 1.

Inventor

RALPH H. SWAISGOOD,

By P. C. Weilein

Attorney

Dec. 22, 1942. R. H. SWAISGOOD 2,306,194

X-RAY MACHINE

Filed Sept. 17, 1940 6 Sheets-Sheet 2

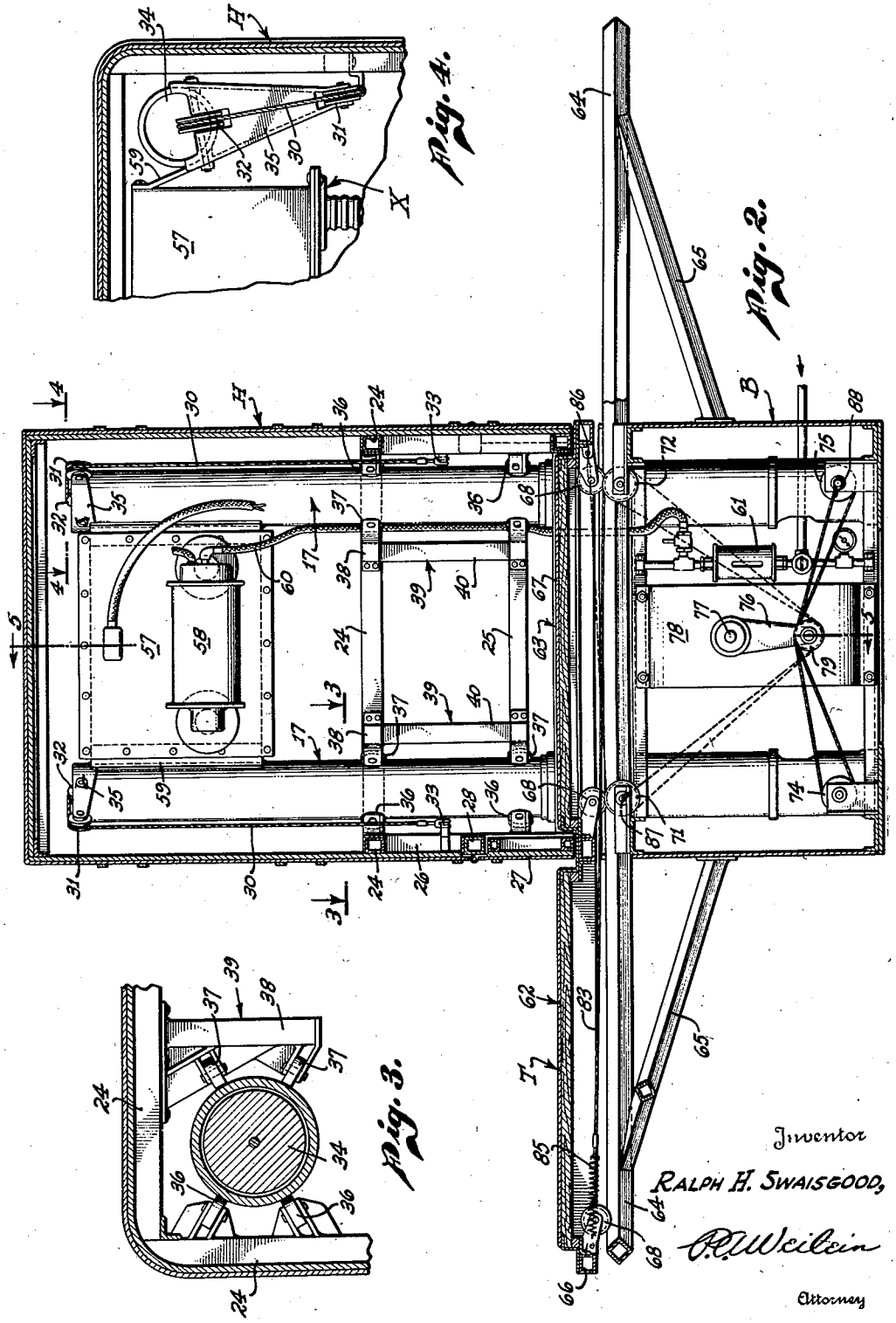

Fig. 2.

Fig. 4.

Fig. 3.

Inventor

RALPH H. SWAISGOOD,

R. H. Weitein

Attorney

Dec. 22, 1942. R. H. SWAISGOOD 2,306,194

X-RAY MACHINE

Filed Sept. 17, 1940 6 Sheets-Sheet 3

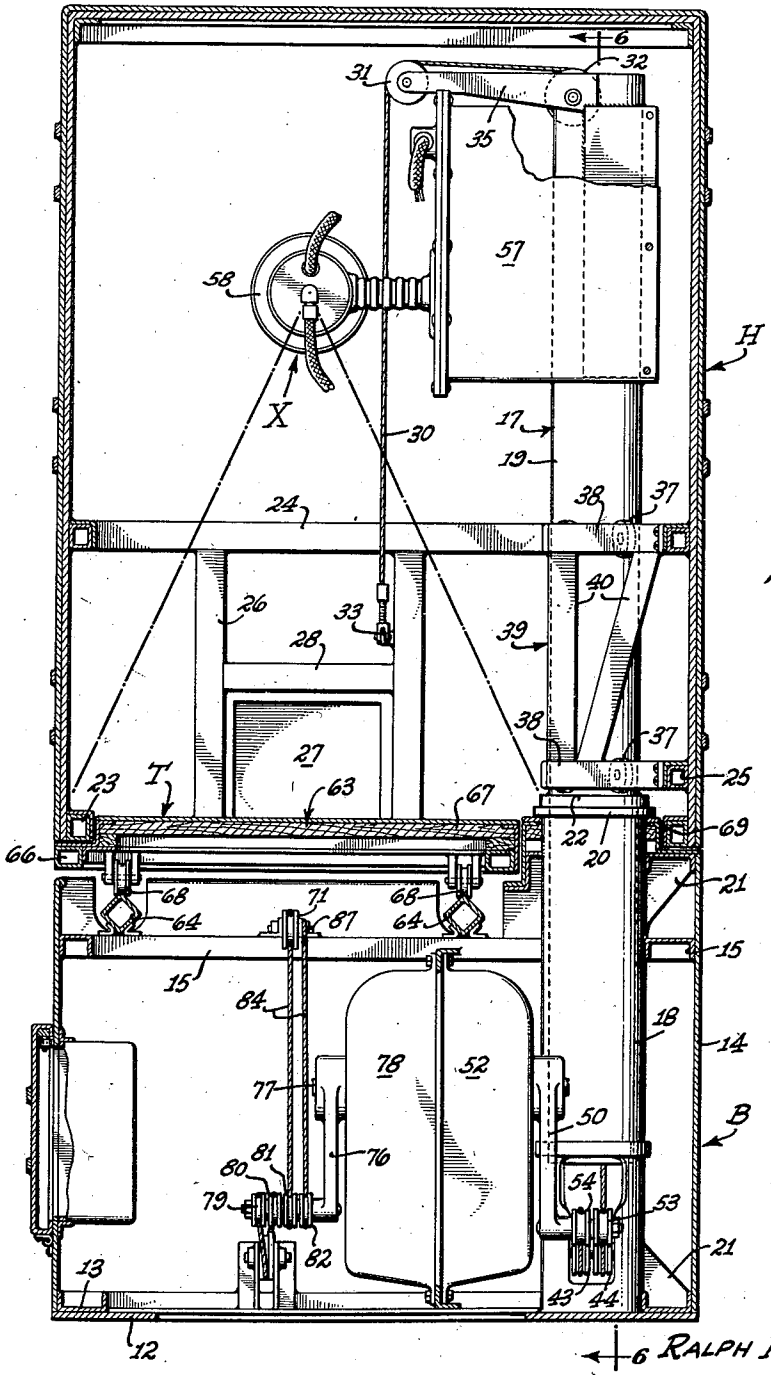

Fig. 5.

Inventor

RALPH H. SWAISGOOD,

By P. P. Weilein

Attorney

Dec. 22, 1942. R. H. SWAISGOOD 2,306,194

X-RAY MACHINE

Filed Sept. 17, 1940 6 Sheets-Sheet 4

Fig. 6.

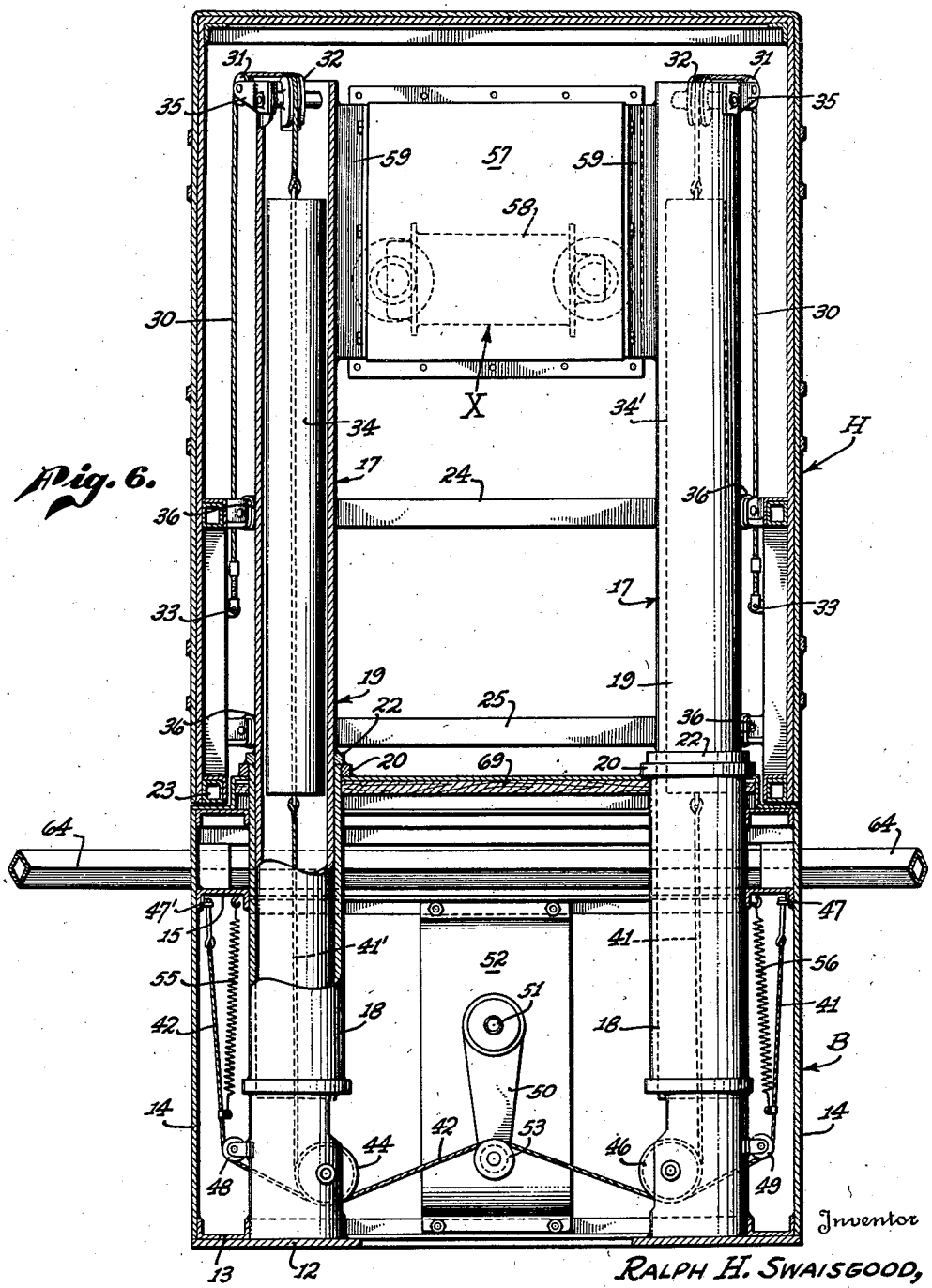

Inventor

RALPH H. SWAISGOOD,

By R. H. Weilein

Attorney

Dec. 22, 1942. R. H. SWAISGOOD 2,306,194

X-RAY MACHINE

Filed Sept. 17, 1940 6 Sheets-Sheet 5

Fig. 7

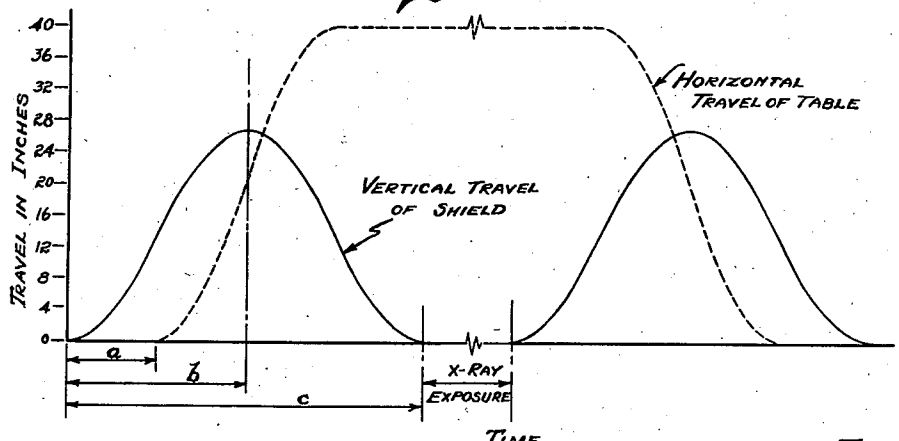

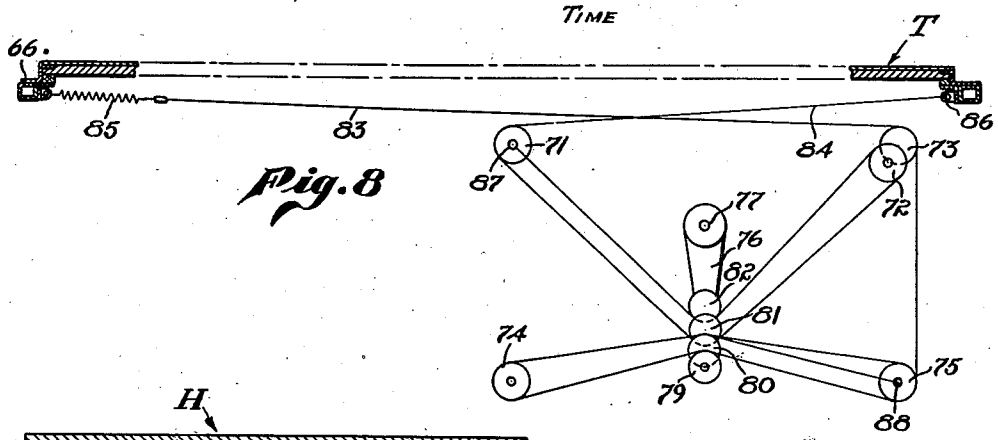

Fig. 8

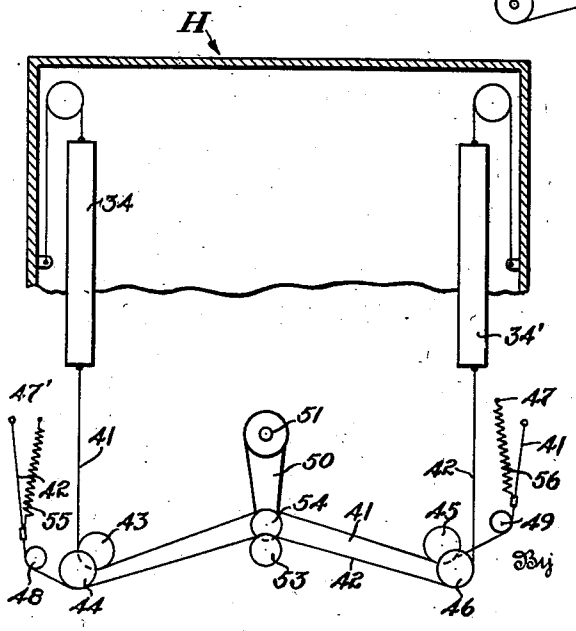

Fig. 9

Inventor

RALPH H. SWAISGOOD,

R. H. Wilcin

Attorney

Dec. 22, 1942. R. H. SWAISGOOD 2,306,194

X-RAY MACHINE

Filed Sept. 17, 1940 6 Sheets-Sheet 6

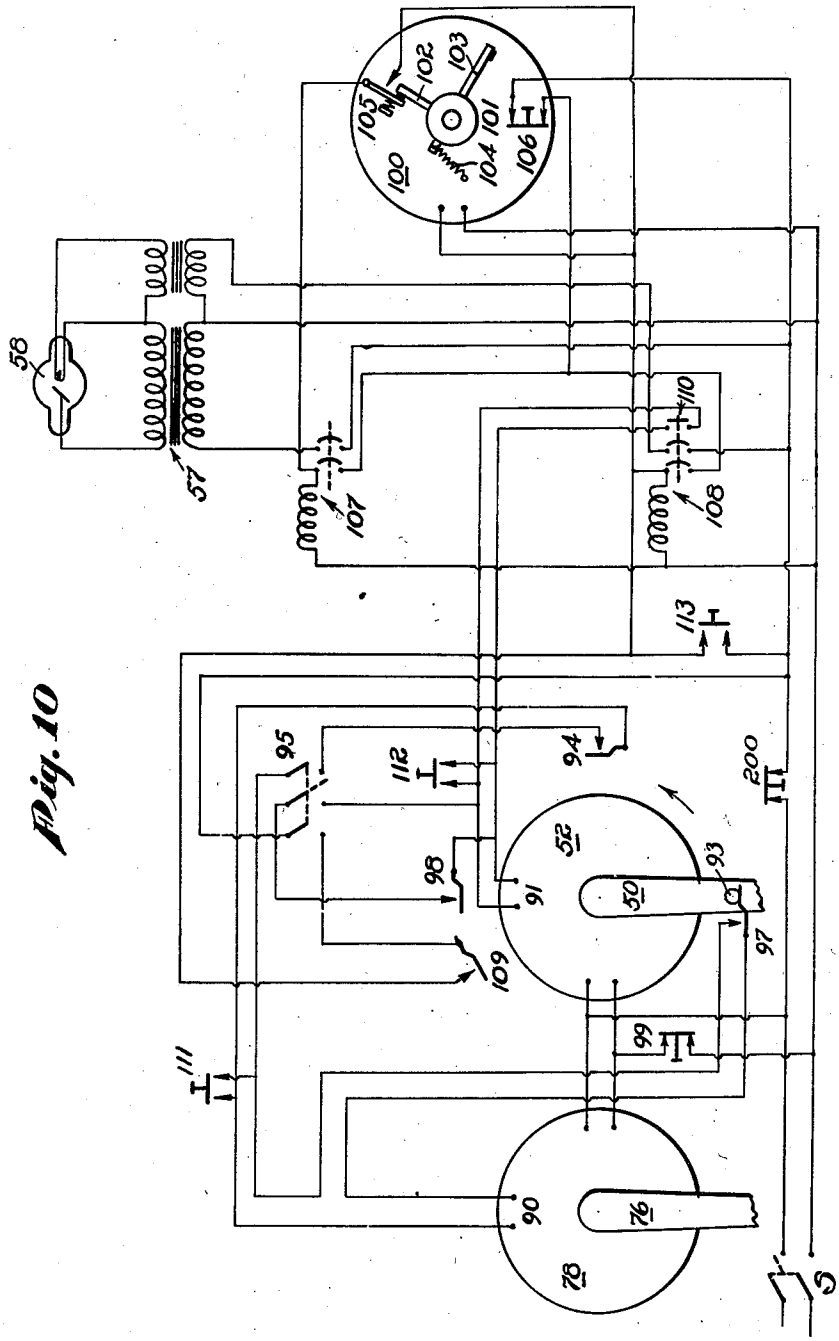

Fig. 10

INVENTOR.
RALPH H. SWAISGOOD,
BY
ATTORNEY.

Patented Dec. 22, 1942

2,306,194

UNITED STATES PATENT OFFICE

2,306,194

X-RAY MACHINE

Ralph H. Swaisgood, Burbank, Calif., assignor to Triplett & Barton Inc., Burbank, Calif., a corporation of California

Application September 17, 1940, Serial No. 357,139

16 Claims. (Cl. 250—53)

This invention relates to machines for the utilization of various types of rays such as X-rays and gamma rays. It is particularly adapted for industrial application in the examination of various structures for internal defects by the use of rays for the production of radiographs or X-ray photographs.

As at present practiced, the production of industrial X-ray photographs involves an extremely laborious procedure, the operator setting up the parts to be photographed with a photographic plate in a lead lined room, leaving the room, turning on the X-ray machine from outside the room, and, after the exposure period is over, turning off the machine, returning to the room, and substituting a second plate, and again setting up parts to be examined. Such a procedure is expensive and time consuming, and results in a great limitation on the time the X-ray machine can operate, as the machine cannot be operated while the operator is present in the room. In addition, the expense of preparing a room, by sheathing it in lead, is considerable, all of which have limited the industrial application of X-rays to a considerable extent.

It is, accordingly, a primary object to provide an X-ray machine which can be operated with a minimum loss of time.

It is a further object of this invention to provide an X-ray machine which can be safely operated in the presence of the operator.

It is a further object of this invention to provide an X-ray machine which is automatic in its operation.

It is a further object of this invention to provide an X-ray machine which has automatic means for positioning objects in the path of the rays and for making the exposure without the intervention of the operator.

It is a further object of this invention to provide an X-ray machine which has means whereby objects to be photographed can be set up while the machine is making an exposure on a previous setup, and which will, upon completion of the exposure, shift the new setup into position for exposure.

It is a further object of this invention to provide an X-ray machine for industrial application which does not need special installation.

It is a further object of this invention to provide an X-ray machine which will shift a setup into position for exposure without disturbing the objects of the setup.

It is a further object of this invention to provide an X-ray machine which can be controlled manually or which may be operated automatically, at the will of the operator.

It is a further object of this invention to provide means for controlling the shifting of setups and the exposure to X-rays in such a manner as to result in a minimum of lost time.

This invention possesses many other advantages and has other objects which may be made more easily apparent from a consideration of one embodiment of the invention. For this purpose there is shown a form in the drawings accompanying and forming part of the present specification. This form will now be described in detail, illustrating the general principles of the invention; but it is to be understood that this detailed description is not to be taken in a limiting sense, since the scope of the invention is best defined by the appended claims.

Referring to the drawings:

Figure 1 is a general perspective view of a machine embodying this invention;

Figure 2 is a sectional elevation taken on the plane 2—2 of Figure 1;

Figure 3 is a fragmentary plan section, enlarged in scale, taken on line 3—3 of Figure 2;

Figure 4 is a similar section on line 4—4 of Figure 2;

Figure 5 is a sectional elevational taken on line 5—5 of Figure 2;

Figure 6 is a sectional elevation taken on line 6—6 of Figure 5;

Figure 7 is a time-displacement diagram showing positions of the table and the shield during different stages of operation;

Figure 8 is a schematic showing of the pulley system for operation of the horizontal table;

Figure 9 is a similar showing of the pulley system for operation of the shield; and

Figure 10 is a wiring diagram of the entire device.

The present embodiment of this invention comprises a hood or shield H which surrounds an X-ray emitting unit X, thus confining the rays emitted to the interior of the shield when it is closed. It is intended to position objects to be X-rayed within the region enclosed by the shield H and to then close the shield and operate the ray emitting means, which may be safely done when the operator is present. In order that no time be lost while the operator places objects to be photographed in position, it is proposed to provide a surface which can be placed within the region enclosed by the shield, or alternatively can be placed outside of that region for loading while the exposure takes place on another

similar surface. This may be accomplished in a number of different ways, such as by the use of sliding tables, a turning table, moving belts, or a shield which moves with respect to a stationary support for objects to be subjected to exposure. In the illustrated embodiment of this invention, the shield H takes the form of a box having sides and top but no bottom. This shield H is mounted to be raised and lowered vertically while a table T which carries objects to be X-rayed is movable horizontally to position different portions of the table beneath the hood which is thereupon lowered thereover, after which an exposure can be made. While an exposure is taking place on one section of the table another section may be loaded in readiness for the next exposure, and thus operation of the machine is limited only by the speed of loading or the exposure time necessary, rather than by the necessity of turning off the X-ray machine when the operator is present in the room. It is also contemplated to provide means for raising and lowering the hood H and shifting the table horizontally automatically, thus leaving the operator free to merely load and unload the table.

The construction shown comprises a base B which is in the form of a base plate 12 carrying a channel-shaped frame 13 to which are secured the plate metal walls 14. As will be observed from Figures 1 and 5, these walls 14 extend upwardly to the bottom of the table member hereinafter described, except in the rear portion of the machine where they extend upwardly to the level of the table member. The side walls 14 have secured to them another channel-shaped frame member 15, the whole forming a rigid structure for supporting the parts of the machine.

The means employed for supporting the shield for vertical movement includes a pair of vertical column members 17 secured to the base B. The column members 17 have been shown in Figure 6 as being composed of two telescoping tubular members 18 and 19. Member 18 of each column has its lower end secured to the base plate 12 and extends upwardly, its upper end being provided with an annular flange 20. In order to rigidly support the member 18 of each column, gussets 21 are secured to the members 18 and to portions of the base by welding or other suitable means. The member 19 of each column telescoping downwardly into the member 18 thereof comprises a tubular member having a flange 22 intermediate its ends, said flange engaging the end of member 18 when member 19 is inserted therein, thus supporting member 19 in a predetermined position. These column members formed by tubular members 18 and 19 thus serve as a rigid support for the hood or shield H.

The shield H is in the form of a rectangular box having an open bottom, being suitably formed of sheet material having its lower edges reinforced as by the peripheral tubular member 23 secured thereto. The shield is lined with lead sheets or the like for preventing the passage of rays through the walls thereof, and is provided on its interior with various reinforcing members including the bracing members 24 and 25 intermediate its top and bottom and the vertical members 26 extending between members 23 and 24. Between members 26 on each side of the shield the wall is provided with a door 27 and the opening thereof is suitably reinforced by the member 28 connected to members 26.

The shield H is supported for vertical movement on the columns 17 by cables 30, passing over pulleys 31 and 32, carried on the upper ends of the columns, each cable having one of its ends anchored to the shield as at 33 and its opposite end secured to a counter-weight 34 contained within a column member 19. As the points of connection 33 of the cable with the shield are preferably in the vertical plane of the center of gravity of the hood H, and as it is preferable to lift the hood H with cables which extend vertically from the points 33, bracket members 35 are secured to the upper ends of the column members 19, and the pulleys 31 are secured to the outer ends of the brackets, above the points 33. The pulleys 32 are mounted in such a position to allow the free passage of the cables 30 from the pulleys 31 to the counter-weights 34.

In order to guide the shield H in its vertical movement on the columns, means is provided for mounting on the shield H a series of rollers 36 and 37, engageable with the column members 19. The rollers 36 are mounted on brackets secured to the members 24 and 25. The rollers 37 are mounted on horizontal struts 38 of frame structures 39 extending outwardly from the rear wall of the shield H and secured to the reinforcing members 24 and 25. These horizontal struts are interconnected by braces 40, the whole forming a rigid structure. The rollers, being spaced both along the length of the column members, and circumferentially thereof, prevent lateral movement of the hood, and also prevent tilting or binding of the hood during vertical movement.

In order to move the shield H vertically, means is provided for raising and lowering the counter-weights 34, 34'. This mechanism is shown in Figure 6 and diagrammatically in Figure 9. It comprises a cable system composed of two cables 41 and 42. The cable 41 is secured at one end to one counter-weight 34, and cable 42 is fastened at one end to the other counter-weight 34'. Mounted within the lower end of each column member is a pair of pulleys. These pulleys, 43, 44, and 45, 46, are so mounted that the cables 41 and 42 can pass around them to the counter-weights 34, 34'. In Figure 9 these pulleys have been shown as offset for clarity of illustration, while actually, as shown in Figure 6, they are mounted in axial alignment in the lower end of each column member 18.

As shown in Figure 9 the free ends of the cables 41 and 42 are secured to the frame of the base as at 47 and 47' and pass around small pulleys 48 and 49. Thus, it is seen cable 41 passes from the point 47 around pulley 49, pulley 45, pulley 43, and thence to counter-weight 34. In a similar manner, cable 42 passes from its point of attachment 47' around pulley 48, pulley 44 to pulley 46 and thence to counter-weight 34'. If the portions of the cables between the columns be lifted it is quite evident that the counter- weights 34, 34' will be caused to travel downwardly and thus lift the shield H. In order to accomplish this lifting a crank 50 adapted to be rotated about an axis 51 by means of a motor 52 has secured to its outer end two pulleys 53 and 54. These pulleys are also in axial alignment, although illustrated as offset in Figure 9. These two pulleys engage the cables 42 and 41, respectively. It can be readily seen that rotation of the crank 50 from the position shown will cause a lifting of the cables 41 and 42, and thus a raising of the shield H. In order to provide for the contingency that one of the cables becomes slacker than the other, spring means 55,

56 fastened to the frame of the base, are secured to the cables 41, 42 at points intermediate the points 47, 47' and the pulleys 48, 49. These springs also prevent the cables from becoming unreeved from the various pulleys in the event that the shield H becomes lodged during its downward travel.

Within the region covered by the shield H is mounted the ray emitting means X, which has been illustrated as a transformer unit 57 to which is secured an X-ray tube 58. The transformer may be conveniently mounted on the column members 19 by means of brackets 59 secured to the column members, as shown in Figures 4 and 5. This X-ray unit is also provided with cooling means including a conduit 60 leading from an air cleaner 61 up the side of one of the column members 19.

As was mentioned above, it is contemplated in the practice of this invention to provide a means whereby a selected portion of a table may be placed within the region covered by the shield H for exposure of the objects thereon, while other portions of the table are available for loading or unloading. This has been accomplished in the illustrated embodiment by the provision of a sliding table T, with two sections 62 and 63 alternatively positionable under the shield. As shown in Figures 1 and 2, a pair of ways 64 is supported on the channel frame 15 of the base B and is provided with suitable bracing means such as members 65 secured between the base member and the extending ends of the ways 64. These ways may be of any suitable construction, that shown in the figures being tubular and rectangular in cross-section. The table T is mounted for rolling motion along the ways 64. The table T has been shown as comprising a tubular frame 66 upon which are mounted the double upstanding supporting portions 62 and 63, which have been shown as composed of wood or the like, the upper faces of the table being sheathed in lead to absorb the X-rays falling thereon. The frame carries a series of wheels 68 suitably placed to roll on the ways 64. It will be observed that the rear of the base has a platform 69 of a construction similar to that of the table, to form a continuation of the raised portions 62 and 63, and has a margin 70 forming a continuation of the corresponding margin of the table T, thus providing circumferential rabbet for engagement with the shield H.

In order to shift the table so that first one and then the other of the raised portions 62 and 63 is beneath the shield, the cable system shown in Figure 2 and diagrammatically shown in Figure 8 is provided. This system consists of pulleys 71, 72, and 73 mounted on the frame 15 of the base member, pulleys 72 and 73 being mounted closely adjacent to each other and on the same axle, although shown in offset relation in Figure 8 for clarity. Another pair of pulleys 74 and 75 is mounted on brackets secured to the lower frame 13 of the base member under pulleys 71 and 72. In a plane midway between the upper and lower pulleys is mounted a crank 76 which turns with a shaft 77 driven by the motor 78. On the end of the crank 76 are mounted four pulleys 79, 80, 81, and 82. These pulleys are preferably on coinciding axes as shown in Figure 5. The showing in Figure 8 is diagrammatic, and the offset relation of these pulleys therein shown is merely for the purpose of convenience of illustration. A pair of cables 83 and 84 have their ends secured to the ends of the table T, the cable 83 being secured to the table by means of a spring 85, and 84 being secured at 86. As will be noted from examination of Figure 8 the cable 84 passes from the point 86 where it is secured to the table around pulleys 71, 81, 72, 82, and is secured to the base frame near the center of pulley 71 as at 87. Likewise, cable 83 passes from the spring 85 around the pulleys 73, 75, 79, 74, 80 and has its end secured to the base frame as at 88 adjacent the center of pulley 75. Examination of Figure 8 will reveal that turning the crank arm 76 through 180° from the position shown in Figure 8 will cause the cable 83 to be drawn towards the crank axis while cable 84 is slacked off a corresponding amount. Thus, the rotation of crank arm 76 through 180° causes the shifting of the table from one position to the other, the spring 85 insuring that both the cables will remain under proper tension at all times.

As can be seen from the above description, the positions of crank 50 and that of crank 76 determine the position of the shield H and the table T. It is necessary therefore to provide some interconnecting mechanism causing the motors 52 and 78 to turn and stop in the desired positions for accomplishing the automatic shifting of the table when the shield is raised, and also to provide means for causing the parts to remain in a stationary position while the exposure of objects within the hood is taking place. These and some of the other objects have been attained in the present instance by the use of special motors at 52 and 78. These motors are so constructed and designed that the momentary closing of a circuit supplied outside the motor causes the motor to rotate 180°. Such motors are well known and are used for operating various mechanisms such as gates and are well illustrated by United States Letters Patent Numbers 1,202,129, and 1,367,931, and will not be further described here. It is seen that the use of such motors renders the operation of the present device extremely simple, as it is only necessary to momentarily close a circuit to start the motors in operation and thus shift either the shield or the table from one position to the other.

Referring now to Figures 7 and 10, Figure 7 shows the desired motion of the shield and table in graphical form, and Figure 10 shows the electrical interconnecting means whereby this motion is accomplished. The two motors 52 and 78 are connected to a source of power S, but will not rotate until a circuit through various devices incorporated in the motors is closed momentarily. These circuits have not been indicated in Figure 10, but terminals 90 on motor 78 and terminals 91 on motor 52 have been indicated. Closing a circuit across either the terminals 90 or 91 will cause a rotation of the corresponding motor through 180°. In Figure 7 it will be observed that the table does not start to move until the shield is approximately half way up in its travel from a position in which its bottom is in registry with the table T. In other words, the table does not start to move until time interval *a* in Figure 7 has been reached. To accomplish this result the crank 50 is provided with a pin or shoe 93 which, when the crank 50 reaches a position approximately midway between its extreme positions, closes switch 94 momentarily. If switch 95 illustrated be closed, as it normally is during automatic operation, closing switch 94 will complete a circuit across terminals 90 momentarily and cause crank 76 to turn 180°. When this happens, the table

will shift from one side to the other, the shifting taking place while the shield is in the upper half of its travel. In order to prevent the table from being accidently moved while the shield is in its downward position the last mentioned circuit is provided with a switch 97 which is normally closed but which is opened by the pin 93 on the crank 50 when the crank is in its lowermost position, which means that the shield is also in its lowermost position. When switch 97 is open there is no way of closing the circuit across terminals 90, and thus the motor 78 cannot be started.

It will be noted in Figure 7 that the shield moves upwardly to the limit of its travel during time *b*, and then starts downwardly again. The motor 52 will not continue to run after crank 50 has reached its uppermost position unless the circuit through 91 is momentarily closed when it reaches that position. As it is desirable sometimes to leave the shield in its uppermost position, the type of motor described has been utilized at 52, and a switch 98 is provided, which, when closed by the pin 93 on crank 50, closes the circuit across the terminals 91 of motor 52, thus starting the crank 50 downwardly again. It will be noted that the circuit through switch 98 and connecting the terminals 91 passes through switch 95 so, if switch 35 be opened, the shield will stay at its uppermost position when it reaches that position, but if switch 95 be closed the shield will move up and then downwardly until it reaches a position in registry with the table T, taking time *c* to complete this cycle. In order to have complete control over the shield at all times, a switch 99 is provided in the motor supply circuits, which is operated by a strip set along the edge of the hood H, so that the shield will stop moving the instant the switch 99 is opened by pressing on the strip. This switch also prevents the hood from operating in the event that the shield, in its downward motion, comes in contact with an obstruction.

The mechanism thus far described is capable of shifting the table when the shield is caused to rise by closing the circuit through terminals 91. As was mentioned before, however, it is contemplated that the shield should automatically stay in place in a downward direction during a suitable period for exposure of objects on the table to the X-rays, and then automatically expose the second set of objects to the X-rays, the entire cycle repeating itself without attention on the part of an attendant other than the setting up and removing of objects to be exposed on the tables 62 and 63. At the same time, it is desired to control the operation of the filament and high voltage circuits of the X-ray unit. All of these are accomplished by a timer mechanism consisting of a rotating element and associated switches and relays.

The rotating element consists of the motor 100 and its associated parts. Clutched to the motor 100 is a revoluble switch mounting 101, to which arms 102 and 103 are attached, these arms being adjustable angularly with respect to each other. The clutch referred to is cam operated, and adjustable, so that a definite adjustable time interval must elapse after the motor 100 starts rotating before the mounting 101 starts to turn. Additionally, this clutch is so constructed as to permit a spring 104 to return the rotating mounting 101 to the position shown in Figure 10 immediately after motor 100 ceases to turn.

A switch 105 is attached to the motor casing in such a manner that when the switch mounting 101 is returned to the position shown in Figure 10, the arm 102 opens the switch 105, and holds it open until immediately after the switch mounting 101 starts to rotate. The casing of the motor also supports a micro-switch 106, which is normally closed and is opened by contact with arm 103. As the angle between arms 102 and 103 can be varied, it is seen that the time interval between the closing of switch 105 and the opening of switch 106 can be varied. The motor 100, the switch 105, and the switch 106 are arranged with a pair of relays 107 and 108 and a switch 109 actuated by the pin 93 in such a manner that closing of the switch 109 when switch 95 is closed, starts the timing motor 100 at the same time closing the contactor 108. This completes the X-ray filament circuit. The switch mounting 101 does not start to rotate until a definite time interval has elapsed, due to the above mentioned clutch mechanism. At the end of this time interval, the mounting 101 starts to rotate, closing switch 105 and energizing the coil of relay 107, thus operating the relay and closing the high voltage X-ray circuit. The switch 109 is so positioned as to permit the filament of the X-ray tube to reach its proper operating temperature prior to the energization of the high voltage X-ray circuit. Switch 109 is so positioned and the time delay of switch 105 is so adjusted that relay 107 does not close until crank 50 has reached its lowermost position, thus preventing the X-ray tube from operating until the shield is in its lowermost position. The X-ray will be operated due to the closing of relay 107 and this operation will continue and the shield and crank remain in their lowermost positions until arm 103 comes in contact with the micro-switch 106. Breaking of the circuits through 106 de-energizes the solenoids of relays 107 and 108, thus causing them to open. As it is desired at this instant to start the shield in an upward direction, the relay 108 is provided with a pair of contacts which close momentarily as the relay 108 operates to open or close the other circuits. These contacts have been indicated at 110. Actually, the contacts 110 are part of a mercury switch mechanically operated by an arm connecting it to the moving element of relay 108. It is realized, of course, that these same contacts 110 operate when relay 108 operates to close the filament circuit, but as this takes place when the crank 50 is in motion and passing switch 109, it has no effect on the operation of motor 52. However, when the relay 108 opens after completion of the X-ray exposure, the circuit through 91 is momentarily closed by contacts 110, which causes the motor 52 to rotate arm 50 through 180°, raising the shield.

In order that the device be capable of operation either manually or automatically the switch 95 is provided. When this switch 95 is open, hand operation must be resorted to and the various circuits through the two motors 52 and 78 and through the X-ray unit may be selectively operated by hand switching means such as the switch 111 operating motor 78, switch 112 operating motor 52 and switch 113 operating the timer which controls X-ray and filament and hand switch 200 for breaking the circuits through the X-ray tube independent of the timing unit.

When the machine is operated by hand with the switch 95 open, the timer unit is controlled by a switch 113 which is normally open but which

when closed starts the timer unit by completing a circuit through the motor 100 thereof.

The cooperation between the various parts of the device should now be clear. Assuming that the shield H is in its downward position, and the switch 95 is closed, the shield may be started up by momentarily closing switch 112. When the crank 50 passes switch 94, the motor 76 operates arm 76 to shift the horizontal table from one end of the ways to the other. This occurs after the interval *a* of Figure 7. The crank 50 continues to rotate until the shield is in its uppermost position at which time it would stop, except for switch 98 which momentarily closes a circuit through 91 and starts crank 50 rotating again to bring the shield down. Before the shield reaches its lowermost position, the filament of the X-ray tube should be started in order that the X-ray tube be in condition to operate when the shield does reach its lowermost position. This is done when pin 93 momentarily closes switch 109 and starts the timing unit as before described. When the crank 50 reaches its lowermost position the contactor 108 should have just closed, thus starting the X-ray exposure which continues until the arm 103 opens the circuits through switch 106, thus restarting crank 50 by momentarily closing the circuit through 91 at 110, which causes the cycle to repeat.

I claim:

1. In a device for producing radiographs, means for emitting X-rays, a shield for confining said X-rays, said shield having an opening, means for closing said opening, and means cooperating with said last mentioned means automatically causing the opening to remain closed and the operation of said X-ray emitting means, said opening remaining closed at least while said X-ray emitting means is in operation.

2. In a device for producing radiographs, means for emitting X-rays, a shield for confining said X-rays, said shield having an opening, means for closing said opening, and means cooperating with said last mentioned means automatically causing the opening to remain closed for a predetermined time and the simultaneous operation of said X-ray emitting means.

3. In a device for producing radiographs, an X-ray emitting means, a shield for confining said X-rays, said shield having an opening, a supporting surface for objects to be exposed to said X-rays, means positioning selected portions of said surface within the shielded region and closing said opening, means changing the portion within the shielded region, and control means causing operation of said X-ray emitting means only when a selected portion of said surface is in position within the shielded region and said opening is closed, said means causing said X-ray emitting means to cease operation and said changing means to operate after the exposure is complete.

4. In a device for producing radiographs, an X-ray emitting means, a shield for confining said X-rays, a surface for supporting objects to be exposed to said X-rays, said shield having an opening, means cooperating with said surface and said shield positioning selected portions of said surface in registry with the opening in a position to close said opening, means changing the portion of said surface in registry with the opening, and control means causing said X-ray emitting means to operate only when said surface is in registry with said opening to thereby close said opening, whereby the objects on said surface are exposed to said X-rays.

5. A device for producing radiographs comprising X-ray emitting means, a shield for confining said X-rays having an opening, a supporting surface for objects to be exposed to said X-rays, means cooperating with said shield and said surface causing said opening to successively register with different portions of said surface to be closed thereby, and means causing operation of said X-ray emitting means only during such registry.

6. A device for producing radiographs comprising X-ray emitting means, a shield for confining said X-rays having an opening, a support for objects to be exposed to said X-rays, means closing said opening, means cooperating with said shield and said support causing different portions of said support to be successively within the shielded region, and means causing operation of said X-ray emitting means only when said support is in proper position within said shielded region and said opening is closed.

7. In a device for producing radiographs, a supporting structure, a shield movably mounted on said structure, a cable for imparting movement to said shield, said cable having one end thereof secured to said supporting structure, and means comprising a crank engaging said cable intermediate its length for causing motion of said shield with respect to the supporting structure.

8. In a device for producing radiographs, a supporting structure, a shield movably mounted on said structure, a cable operatively connecting said shield and said supporting structure, said cable being so arranged that changing of its effective length causes movement of said shield with respect to said structure, and a crank having means engaging an intermediate portion of the cable to thereby change its effective length on movement of said crank.

9. In a device for producing radiographs, a supporting structure, a shield movably mounted on said structure, a cable operatively connecting said shield and said supporting structure, said cable being so arranged that changing the effectice length thereof causes movement of said shield with respect to said structure, a crank having means engaging an intermediate portion of said cable, said cable passing over a pair of cable guiding means on either side of the portion engaged by the crank, whereby movement of the crank causes a change in the effective length of the cable.

10. In a device for producing radiographs, a supporting structure, a shield movably mounted on said structure, a cable operatively connecting said shield and said supporting structure, said cable being so arranged that changing its effective length causes movement of said shield with respect to said structure, a crank having means engaging an intermediate portion of the cable, said cable having one end thereof fixed relative to the center of the crank, and passing over a pulley fixed relative to the crank, said pulley being intermediate the portion of the cable engaged by the crank and the other end of the cable, whereby rotation of the crank causes a change in the effective length of the cable and consequent movement of the shield with respect to said supporting structure.

11. In a device for producing radiographs, a supporting structure, a shield movably mounted on said structure, a cable operatively connecting

said shield and said supporting structure, a crank mounted for rotation on said supporting structure, a pulley on said supporting structure, said cable passing over said pulley, said crank having means engaging the cable between said pulley and the end connected to the supporting structure, whereby rotation of the crank causes movement of the shield with respect to the supporting structure.

12. In a device for producing radiographs, a supporting structure, a shield movably mounted on said structure, a pair of cables operatively connecting said shield and said supporting structure, a pair of pulleys on said supporting structure, said cables engaging the pulleys intermediate their ends, means on said crank engaging each cable between the end thereof and the end connected to the supporting structure, and means connected to the cable for maintaining the tension on said cables regardless of the relative position of the shield, support and crank.

13. In a device for producing radiographs, a supporting structure, a supporting surface slidably mounted on said supporting structure, a cable connected to said supporting surface and to said supporting structure, said cable being so arranged that changing of its effective length causes a movement of said supporting surface with respect to the supporting structure, and means for causing such change in the effective length of the cable.

14. In a device for producing radiographs, a supporting structure, a supporting surface slidably mounted on said supporting structure, a cable operatively connecting said supporting structure and said supporting surface, said cable being so arranged that changing its effective length causes movement of said surface with respect to said structure, a crank having means engaging an intermediate portion of the cable, said cable passing over a pair of cable guiding means on either side of the portion engaged by the crank, whereby movement of the crank causes a change in the effective length of the cable.

15. In a device for producing radiographs, a supporting structure, a table slidably mounted on said supporting structure, a cable operatively connected to the supporting structure and said table and being so arranged that changing the effective length of the cable causes movement of the table with respect to the supporting structure, a pair of cable guiding means engaging the cable at points intermediate its length, said cable passing from its point of connection to the supporting structure to one of said guiding means, thence to the second guiding means and thence to the point of connection with the table, and a crank mounted for rotation, said crank having cable engaging means engaging the cable in the portion intermediate its point of attachment to the supporting structure and the first mentioned guiding means, and also in the portion of the cable intermediate the first and second mentioned guiding means, whereby rotation of the crank causes a change in the effective length of the cable and consequent movement of the table.

16. In a device for producing radiographs, a supporting structure, a table slidably mounted on said supporting structure, a pair of cables operatively connected to the supporting structure and to the table, said cables being so arranged that the decreasing of the effective length of one, accompanied by an increase in the effective length of the other causes motion of the table with respect to the supporting structure, cable guiding means on the supporting structure engaging each of the cables at a point intermediate the ends thereof, a crank mounted for rotation on said supporting structure, said crank having means for engaging the cables each in a portion intermediate the guiding means and the point of attachment to the supporting structure, and the center of the crank being intermediate the lines between the guiding means and the respective points of attachment to the supporting structure, whereby rotation of the crank causes a decrease in the effective length of one of the cables and a simultaneous increase in the effective length of the other.

RALPH H. SWAISGOOD.