(12) UK Patent Application (19) GB (11) 2 344 395 (13) A

(43) Date of A Publication 07.06.2000

(21) Application No 9926136.4

(22) Date of Filing 05.11.1999

(30) Priority Data
(31) 19850922 (32) 05.11.1998 (33) DE

(71) Applicant(s)
Luk Lamellen und Kupplungsbau GmbH
(Incorporated in the Federal Republic of Germany)
Industriestrasse 3, Postfach 1360, 77815 Bühl, Baden,
Federal Republic of Germany

(72) Inventor(s)
Sven Karnz

(74) Agent and/or Address for Service
Dummett Copp
25 The Square, Martlesham Heath, IPSWICH, Suffolk,
IP5 3SL, United Kingdom

(51) INT CL[7]
F16D 25/08

(52) UK CL (Edition R )
F2L LK L211 L501

(56) Documents Cited
GB 2306201 A GB 2241762 A WO 96/37713 A
US 5806648 A

(58) Field of Search
UK CL (Edition R ) F2L LK
INT CL[7] F16D 25/08
ON-LINE: EPODOC, JAPIO, WPI

(54) Abstract Title
**Retaining ring for an hydraulically operated clutch release system**

(57) A hydraulic central clutch release system 2 is disclosed, comprising a pressure chamber 8 in which an annular piston 9 is displaceably guided. At an end remote from the chamber the piston supports a release bearing 11 comprising balls 14 guided between inner and outer bearing rings 13,15. A retaining ring 1 serves to couple the release bearing on the annular piston by means of circumferentially spaced resilient tangs 22a (ie. radially inwardly directed projections) which have snap-fitting keyed engagement in recess(es) 23 of the piston. The tag is mounted in a section 16 of the retaining ring which encloses an end section of the piston, the retaining ring further comprising a radially extending shoulder 17 which is supported against said enclosed end. The tags may be formed with a circular arc shaped contour (Figure 2), or as a chord section (Figure 4).

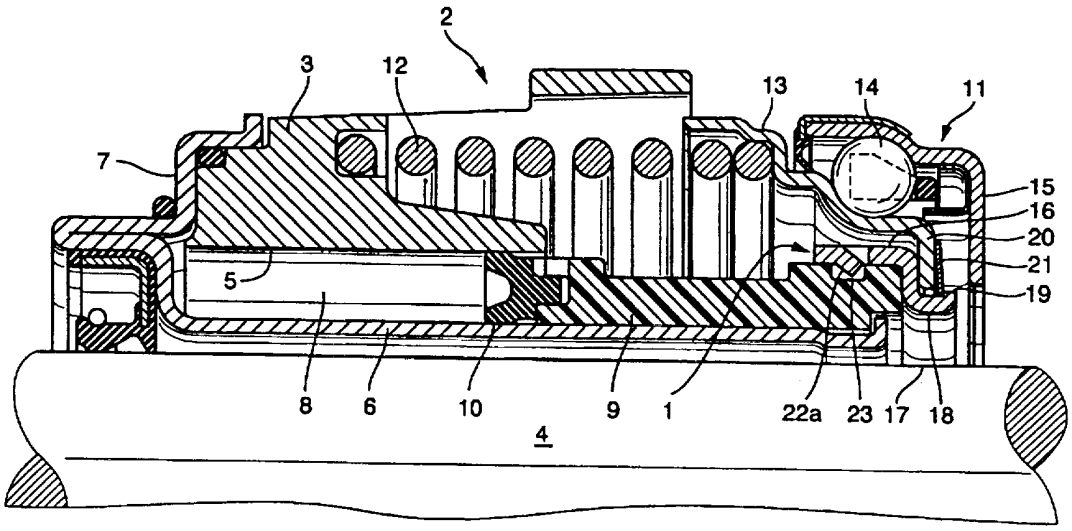


Fig. 5

GB 2 344 395 A

At least one drawing originally filed was informal and the print reproduced here is taken from a later filed formal copy.

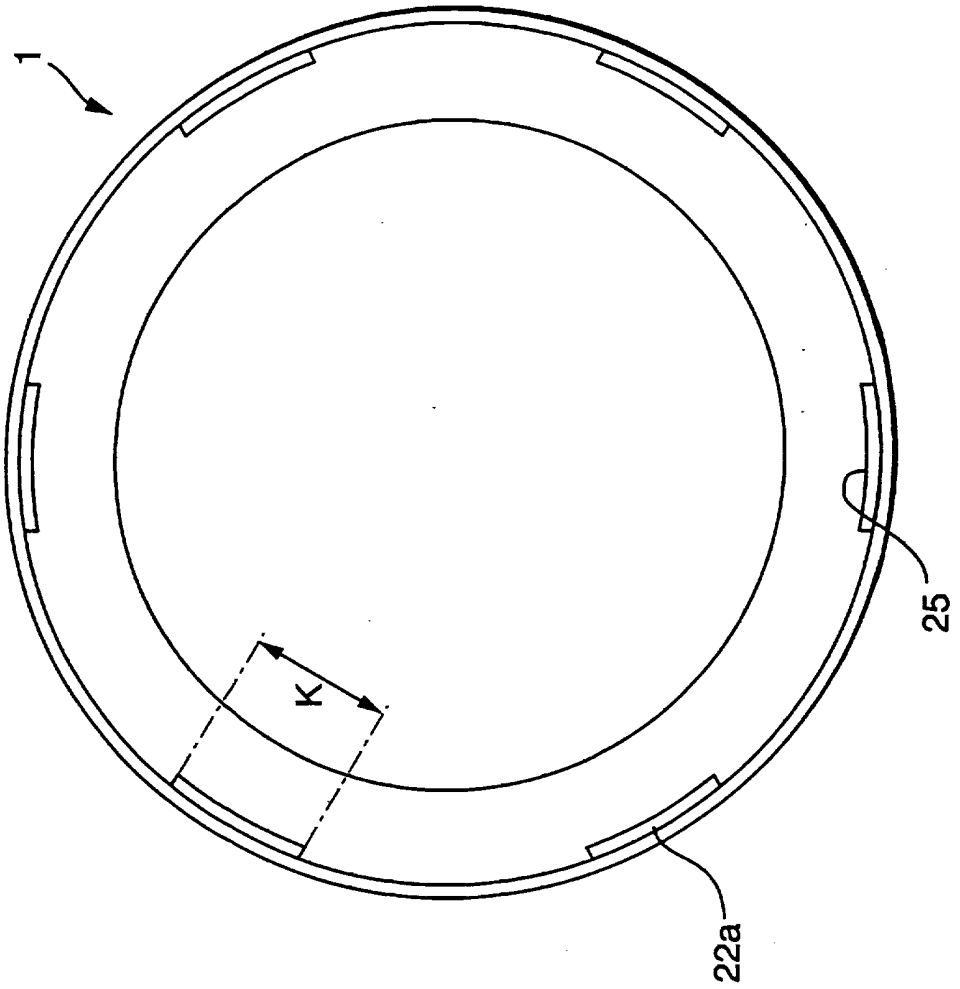


Fig. 2

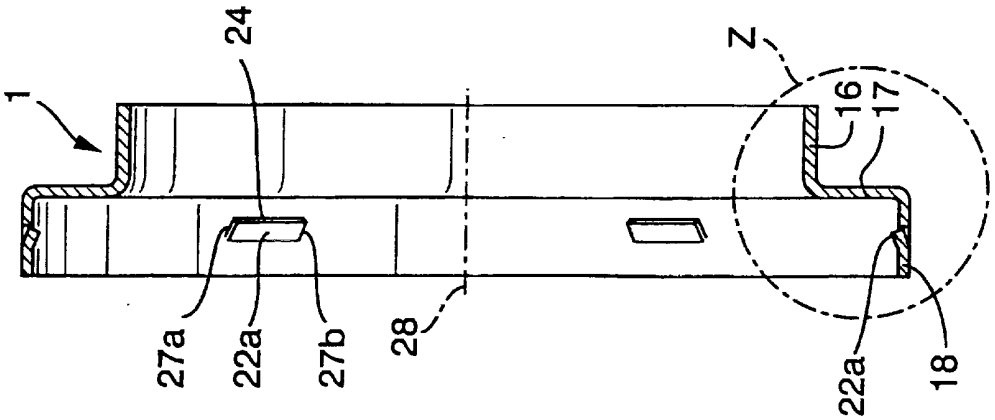


Fig. 1

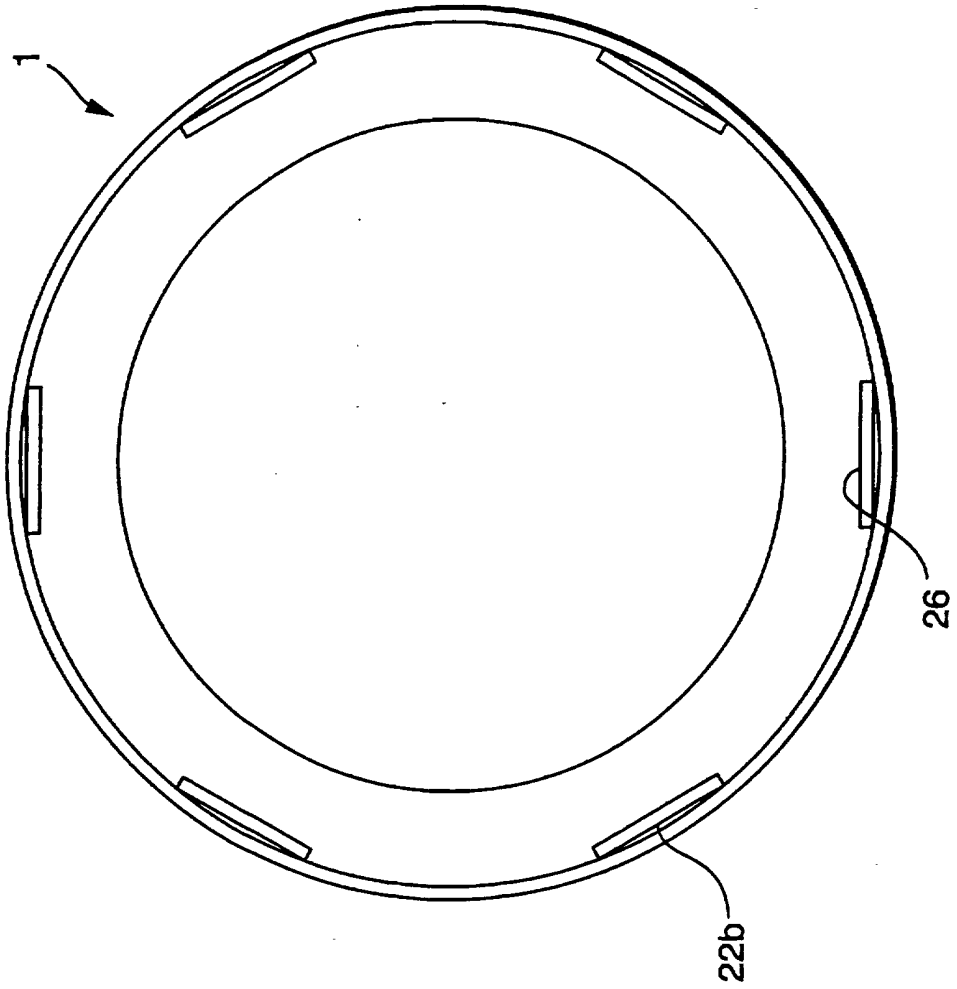


Fig. 4

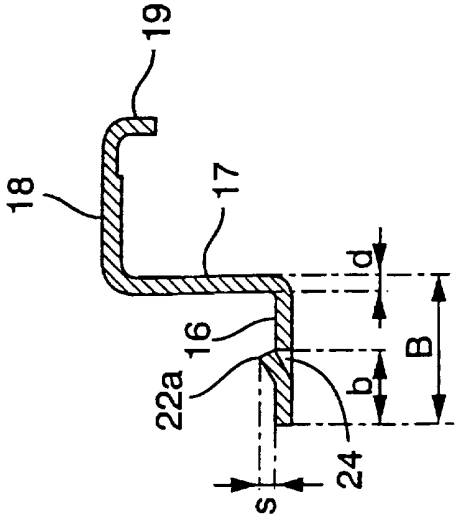


Fig. 3

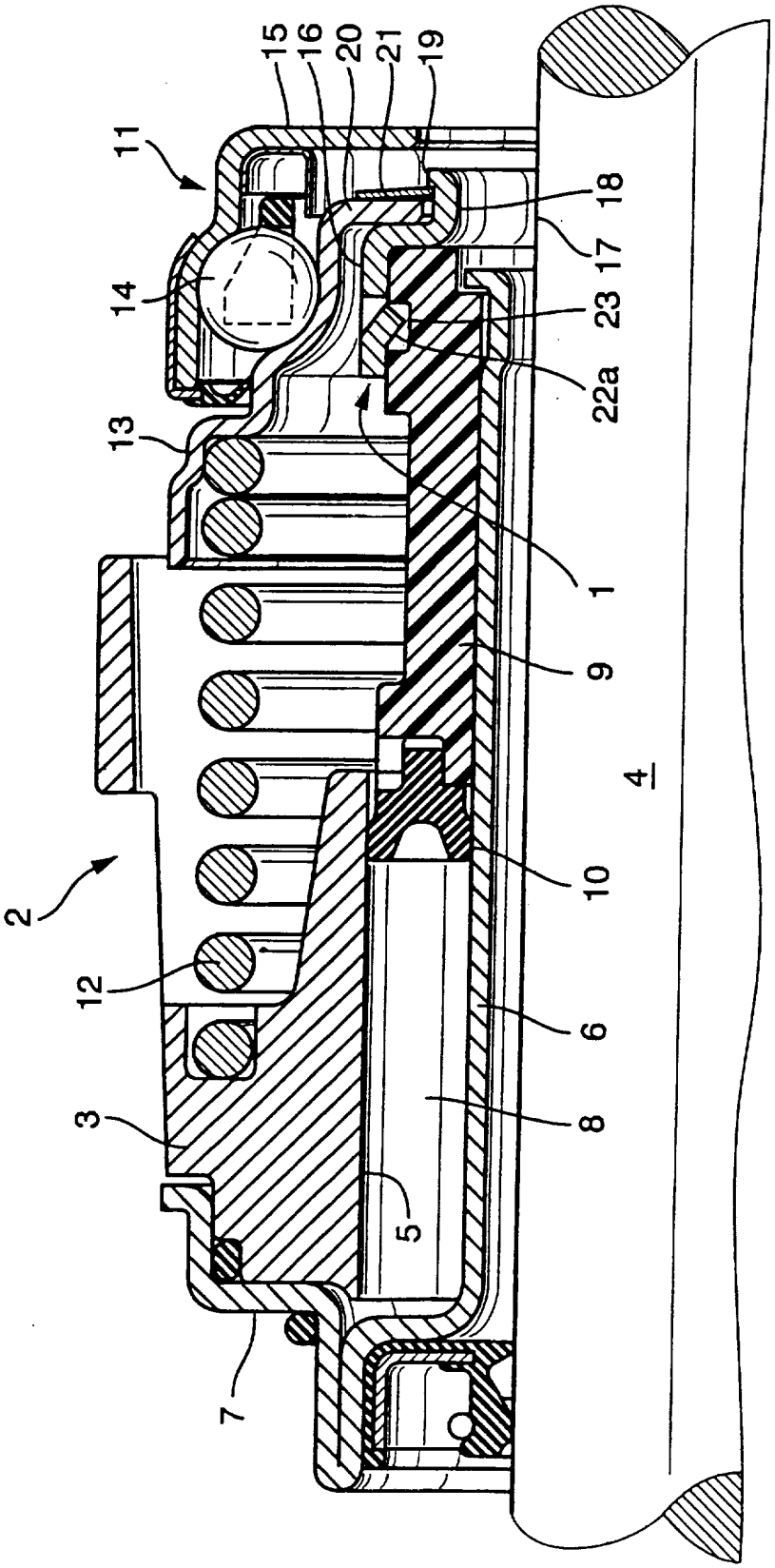


Fig. 5

# RETAINING RING FOR FIXING A RELEASE BEARING IN A RELEASE SYSTEM

The present invention relates to a release system, for hydraulically actuating a friction clutch of a vehicle, wherein a housing is mounted concentric with a drive shaft which connects an internal combustion engine to a gearbox with toothed gears and the housing has a central longitudinal bore which forms together with a guide sleeve which is radially spaced from the drive shaft and from the longitudinal bore a circular ring shaped pressure chamber in which a annular piston is guided axially displaceable and at its end remote from the pressure chamber the annular piston holds a release bearing and for this a retaining ring is provided which encloses with its largest diameter range the annular piston and a radially recessed section of the retaining ring is provided for fixing the release bearing.

Several examples of release systems of this kind are known. DE 44 12 928 A1 describes and illustrates a release system wherein the inner bearing ring of the release bearing which is mounted rotationally rigid is supported at the end on the annular piston. For fixing, a holding element designed as a retaining ring is used which in connection with a holding cap engages round a radially aligned flange of the bearing ring. A plate spring which is inserted between a collar of the holding cap and the flange of the bearing ring provides a positive locking support of the bearing ring. The retaining ring is held by means of so-called fastening studs which snap-fit in recesses in the annular piston. These fastening studs which are formed in the retaining ring by an imprinting process which involves no removal of stock have only a restricted projection mass or stud height and thus ensure

in the installed state only a relatively slight overlap with the outer contour of the annular piston. With an unfavourable tolerance position between the retaining ring and the annular piston there may result loosening of the connection as a result of an inadequate overlap. A loosened connection results in a functional breakdown of the entire release system and impairs the function of the vehicle.

The object of the present invention is to develop, starting from the technical drawbacks of the known solution, a retaining ring or holding element which has an effective secure and permanent fastening on the annular piston.

The problem outlined above is solved according to the invention through the features mentioned in the characteristic part of claim 1. According to this for fastening and positioning the retaining ring on the annular piston at least one elastically deformable tang formed by a slit or free cut in the retaining ring is provided in the largest diameter area of the retaining ring. The radially inwardly bent tang according to the invention thereby projects radially inwards from the inner wall of the retaining ring and forms at the free end a holding shoulder which in the installed state of the retaining ring automatically engages with keyed engagement in a recess or free area of the annular piston.

Advantageously the tang which is formed by a free cut results in a protruding mass which is enlarged compared with previous solutions and thus a greater overlap or underlap between the holding shoulder and the outer contour of the annular piston in the area of the recess. The enlarged overlap compared with the prior art, which is

also termed assembly lateral height, improves the functional reliability of the snap-fit connection and thus the fastening of the retaining ring on the annular piston. The slit ensures a stronger bending of the tang without the stresses arising through the bending resulting in a break or crack in the tang. As a result the tang design according to the invention increases the fitting security of the retaining ring.

Designs of the invention form the subject of claims 2 to 10 whose advantages will be described below.

For a suitable embodiment of the tang it can be formed by a U-shaped free cut. To this end the free cut is made into the retaining ring so that its parallel arms are aligned in the direction of a longitudinal axis of the retaining ring. The holding shoulder of the tang thereby points in the installation position in the direction of the release bearing. The spacing of the arms as well as their length, which have a direct bearing on the size of the tang, is freely selectable. By way of example it is possible for a retaining ring which is made from a material of high strength and relatively low material elasticity to make the arms longer in order to avoid the risk of cracks and breaks. According to the invention for the parallel spacing of the arms it is proposed to design these in dependence on the diameter of the retaining ring.

The invention further includes a different design of holding shoulders, i.e. the free ends of the tangs. Where required the tang can be provided at the end with a circular arc shaped inner contour which advantageously matches the shape of the grooved base of the recess or free area in the annular piston. This tang design creates a large contact zone between the holding shoulder and the

annular piston. As an alternative it is possible after radially bending the tang to leave this without any further finishing work. A tang end area is thereby formed where the holding shoulder is formed as a chord.

According to the invention it is further proposed that the section of the retaining ring protruding axially from the annular piston is provided at the free end with radially inwardly aligned indentations or a collar or edge which is arranged in sections or circumferentially. This measure forms an axial stop which serves as a support for a holding means, more particularly a plate spring which is supported mutually on a radial flange of the bearing ring in order to produce a force-locking bearing of the bearing ring against the retaining ring and indirectly at the end on the annular piston.

Preferably according to the invention the retaining ring is provided with several tangs arranged symmetrically around the circumference. In the installation position these tangs snap fit in recesses or free areas of the annular piston whose number and position agrees with the tangs of the retaining ring. As an alternative the tangs snap fit in a circumferential groove of the annular piston.

In one design of the tangs it is further proposed that their depth measurement 's', i.e. the extent by which the tangs protrude radially from the inner wall of the retaining ring, is greater than half the wall thickness of the retaining ring. In order to improve the fitting reliability and snap-fit function the depth 's' can clearly exceed the extent of the wall thickness.

In order to determine the position of the free cut the invention proposes arranging the circumferentially aligned free cut zone of a U-shaped free cut in the area of half the width of the section of the retaining ring which encloses the annular piston. As a suitable arm length for the free cut a measurement is proposed which is greater than a quarter of the section width previously described.

In order to provide a cost-effective component part the retaining ring according to the invention is preferably made without stock removal, thus by a deep drawing process from a metal material. This production is suitable for mass production lines and represents a significant cost advantage.

The invention will now be explained in further detail with reference to embodiments shown in the drawings in which:

Figure 1 is a longitudinal sectional view through a retaining ring according to the invention;

Figure 2 shows a front view of the retaining ring according to Figure 1;

Figure 3 shows a detail 'z' of Figure 1 on an enlarged scale;

Figure 4 shows the front view of the retaining ring depicted in Figure 1 with an alternative form of tang;

Figure 5 shows the hydraulic release system for a friction clutch of known construction which contains a retaining ring according to the invention for fixing the release bearing.

In order to explain the invention first the retaining ring 1 according to the invention is described according to Figure 5 in the installed state of known hydraulic release system 2. The construction of the release system 2 comprises a housing 3 which is mounted concentric with a drive shaft 4. A guide sleeve 6 mounted radially spaced from a longitudinal bore 5 and from the drive shaft 4 is fixed through an annular flange 7 on the housing 3. A pressure chamber 8 restricted radially by the housing 3 and by the guide sleeve 6 serves to hold an annular piston 9 which is provided on the pressure chamber side for sealing with a groove ring seal 10. On the end remote from the pressure chamber 8 the annular piston 9 supports a release bearing 11. In order to achieve a play-free contact of the release bearing 11 against a friction clutch (not shown in Figure 5) a pre-load spring 12 is provided which is inserted between the housing 3 and an inner bearing ring 13 of the release bearing 11. The release bearing 11 which is formed as an inclined shoulder bearing is provided with rolling bodies 14 in ball form guided between the inner bearing ring 13 and an outer bearing ring 15. The retaining ring 1 serves to couple the release bearing 11 on the annular piston 9. The stepped retaining ring 1 encloses by a section 16 an end section of the piston 9. The axially aligned section 16 is adjoined by a radially extending shoulder 17 which is supported against the end of the piston 9.

Furthermore the retaining ring 1 comprises a projection 18 which adjoins the shoulder 17, protrudes axially beyond the annular piston 9 and is provided at the free end with a radially outwardly extending collar 19. The inner bearing ring 13 of the release bearing 11 is supported with a ring flange 20 on the shoulder 17 of the retaining

ring 1. In order to obtain a force-locking support a plate spring 21 is used which is located on the inside on the collar 19 of the retaining ring 1 and on the outer side abuts the ring flange 20. Fixing the retaining ring 1 on the annular piston 9 is by a resilient tang 22a. The tang 22a which is mounted in the section 16 forms a radially inwardly directed projection formed as a holding shoulder 25 and snap-fitting with keyed engagement in a recess 23 of the annular piston 9.

Figures 1 to 3 show the construction of the retaining ring 1 which according to Figure 2 is provided with overall six tangs 22a arranged symmetrically spread out around the circumference. In order to form these tangs 22a first a U-shaped cut 24 is made in the section 16 of the retaining ring 1 before the area defined by the U-shaped cut 24 and forming a tongue is bent radially inwards. As shown in Figure 2 the shoulders 25 which connect the tangs to the disc 16 are formed with a circular arc shaped contour which is concentric with the outer contour of the section 16. The width 'k' of the tang 22a is < to the measurement 'B' which corresponds to the longitudinal extent of the section 16 of the retaining ring 1.

The detail 'z' from Figure 1 shown on an enlarged scale in Figure 3 illustrates the arrangement and shape of the tang 22a. This has a depth 's' which corresponds > to half the wall thickness 'd' of the retaining ring 1. The area of the cut 24 running in the circumferential direction is axially spaced from the end side whereby the corresponding measurement 'b' corresponds < to half the width 'B' of the section 16. Figure 3 furthermore shows an end area of reduced wall thickness at the end of the section 18 which allows shaping without stock removal from a radially

inwardly aligned collar 19 on which the plate spring 21 is supported (according to Figure 5).

Figure 4 corresponds substantially to Figure 2 but differs in that the holding shoulders 26 of the tangs 22b are formed at the free end as a chord or as a chord section. This free shaping is set after the tangs 22b have been bent radially inwards without any finishing work e.g. shaping of the holding shoulders 26.

# CLAIMS

1. Release system, for hydraulically actuating a friction clutch of a vehicle, with which a drive shaft of a gearbox with toothed gears can be coupled to an internal combustion engine, with a housing arranged concentric with the drive shaft and having an elongated bore which forms together with a guide sleeve which is radially spaced from the drive shaft and from the longitudinal bore a circular ring shaped pressure chamber in which a annular piston is guided axially displaceable and at its end remote from the pressure chamber the annular piston holds by means of a retaining ring a release bearing which is fixed in its larger diameter area on the annular piston and by means of a radially recessed projection of smaller diameter holds a track ring of the release bearing characterised in that the retaining ring has for fastening and positioning on the outer circumference of the annular piston in one section at least one resilient tang which is formed by a free cut and a radial shaped area and which bent radially inwards forms a retaining shoulder which automatically engages with keyed connection in a recess of the annular piston.

2. Release system according to claim 1 characterised in that a U-shaped slit is introduced into the section of the retaining ring and its parallel arms are aligned in the direction of a longitudinal axis of the retaining ring and the retaining shoulder is aligned relative to the release bearing.

3. Release system according to claim 1 characterised in that a free end of the tang, the retaining shoulder, has a circular arc shaped inner contour.

4. Release system according to claim 1 characterised in that the tang has a retaining shoulder formed as a chord section.

5. Release system according to claim 1 characterised in that the projection of the retaining ring protruding axially beyond the annular piston is provided at the end with radially inwardly aligned indentations formed as a collar, for supporting a retaining means with which a radially aligned ring flange of the rotationally rigid inner bearing ring is held with force-locking engagement on the retaining ring.

6. Release system according to claim 1 characterised in that the retaining ring is provided with several symmetrically arranged tangs.

7. Release system according to claim 1 characterised in that the tangs lock in a circumferential groove of the annular piston.

8. Release system according to claim 1 characterised in that the annular piston is provided with recesses whose number and arrangement agree with the tangs inserted in the retaining ring.

9. Release system according to claim 1 characterised by a depth measurement 's' of the tang which corresponds > half the size of the wall thickness of the retaining ring.

10. Release system according to claim 1 characterised in that the zone of the slit of the tang running in the circumferential direction is arranged in the area of half the width of the section of the retaining ring.

11. Release system according to claim 1 characterised by a retaining ring made without stock removal from a metal strip material.

12. Release system substantially as herein described with reference to the accompanying drawings.

13. Retaining ring substantially as herein described with reference to the accompanying drawings.

The Patent Office

INVESTOR IN PEOPLE

| | | | |
|---|---|---|---|
| **Application No:** | GB 9926136.4 | **Examiner:** | David McWilliams |
| **Claims searched:** | 1-13 | **Date of search:** | 30 March 2000 |

## Patents Act 1977
## Search Report under Section 17

**Databases searched:**

UK Patent Office collections, including GB, EP, WO & US patent specifications, in:

UK Cl (Ed.R): F2L: LK

Int Cl (Ed.7): F16D 25/08

Other: ON-LINE: EPODOC, JAPIO, WPI

**Documents considered to be relevant:**

| Category | Identity of document and relevant passage | | Relevant to claims |
|---|---|---|---|
| X | GB 2306201 A | AUTOMOTIVE (see retaining member 19) | 1-11 |
| Y | GB 2241762 A | AUTOMOTIVE (see prong 58c) | 2-11 |
| X,Y | WO 96/37713 A1 | INA (see piston 6 and figures) | X=1<br>Y=2-11 |
| X | US 5806648 | VALEO (see washer ring 2) | 1-11 |

| | | | |
|---|---|---|---|
| X | Document indicating lack of novelty or inventive step | A | Document indicating technological background and/or state of the art. |
| Y | Document indicating lack of inventive step if combined with one or more other documents of same category. | P | Document published on or after the declared priority date but before the filing date of this invention. |
| & | Member of the same patent family | E | Patent document published on or after, but with priority date earlier than, the filing date of this application. |