May 6, 1930. C. HAMLIN 1,757,631

SIGNAL REMINDING MECHANISM

Filed June 23, 1928 2 Sheets-Sheet 1

FIG. 1

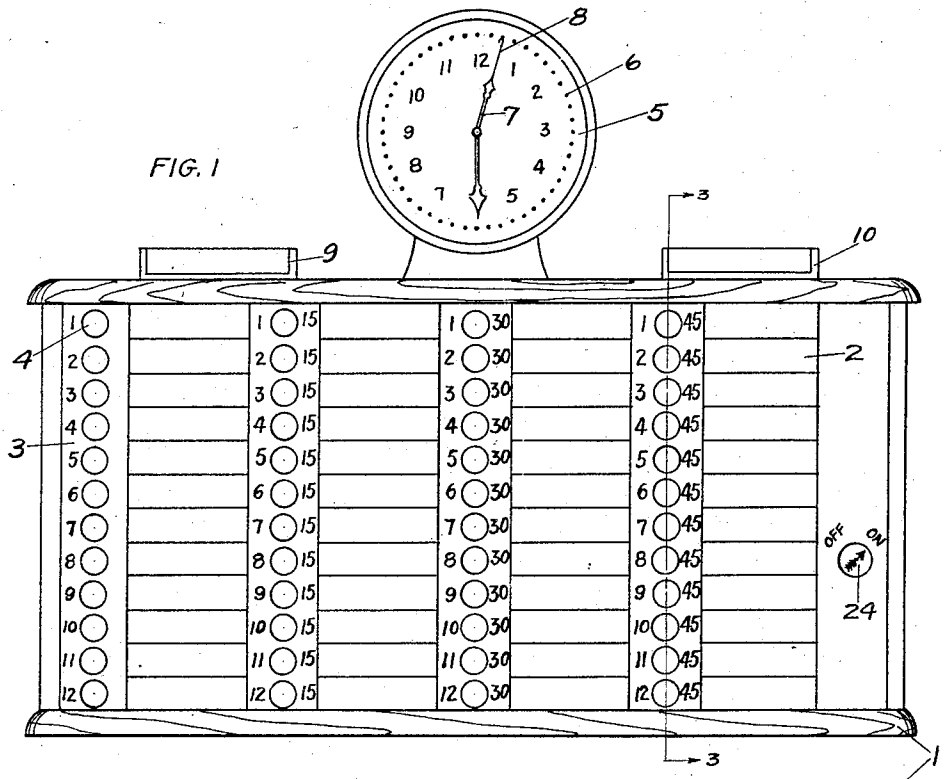


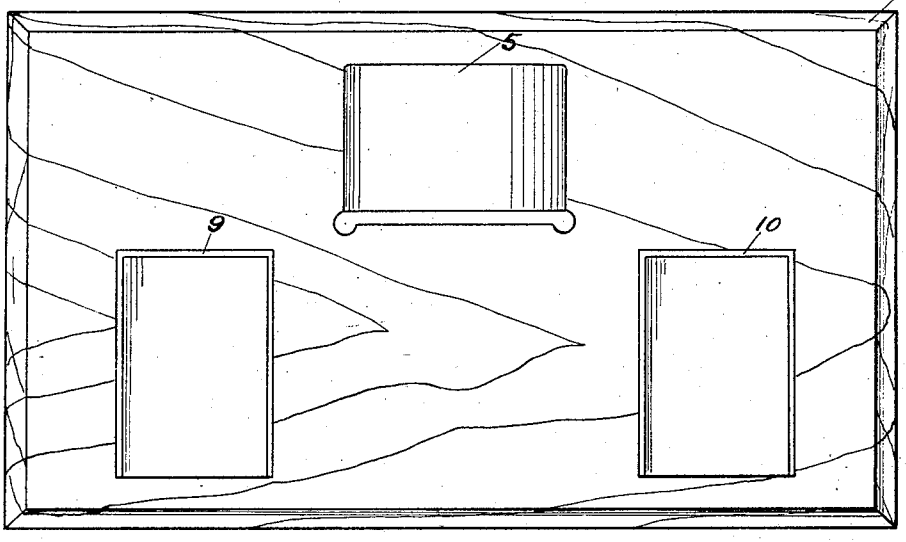


FIG. 2

INVENTOR
CYRIL HAMLIN
BY A. D. T. Libby
ATTORNEY

May 6, 1930. C. HAMLIN 1,757,631

SIGNAL REMINDING MECHANISM

Filed June 23, 1928 2 Sheets-Sheet 2

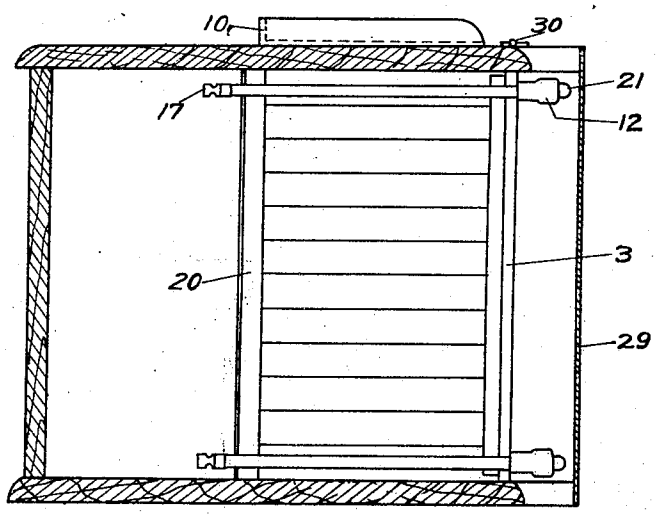


FIG. 3

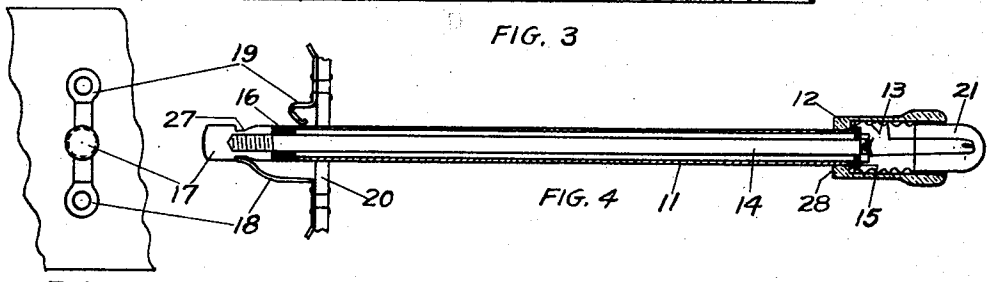


FIG. 5 FIG. 4

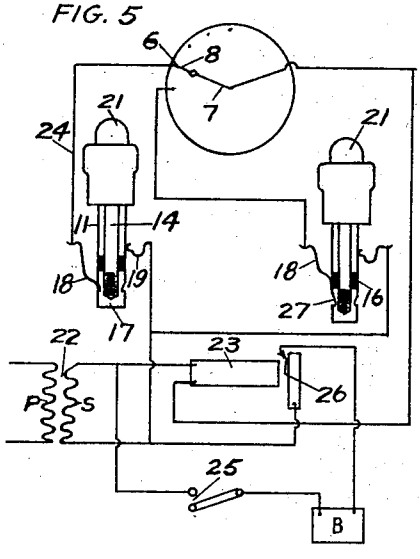


FIG. 6

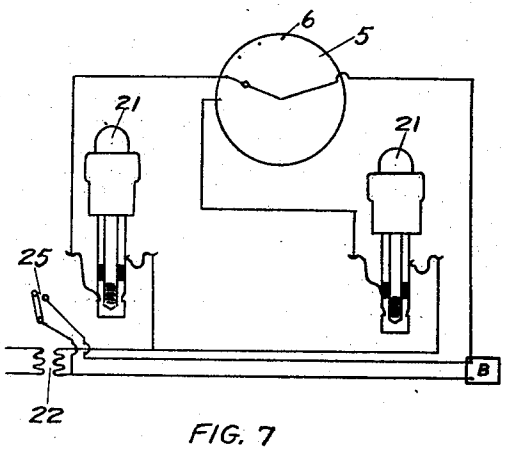


FIG. 7

INVENTOR
CYRIL HAMLIN
BY A. D. T. Libby
ATTORNEY

Patented May 6, 1930 1,757,631

# UNITED STATES PATENT OFFICE

CYRIL HAMLIN, OF NEWARK, NEW JERSEY

## SIGNAL REMINDING MECHANISM

Application filed June 23, 1928. Serial No. 287,724.

This invention relates to means for reminding a person or calling attention to appointments or the like, or to the operation of some production machine used for manufacturing purposes to which the apparatus hereinafter described is connected. I am aware that memory clocks and similar devices have heretofore been proposed for calling attention to appointments, but all those with which I am familiar, are relatively complicated and expensive to construct and many of them not altogether reliable in operation.

It is therefore one of the objects of my invention to provide a reminding or observation apparatus which is relatively simple and therefore inexpensive to manufacture, but which is positive in its operation.

Another object of my invention is to provide a construction in which the principal working parts are made up of a number of interchangeable units which may be quickly assembled and disassembled in the cabinet carrying these parts.

Another object of my invention is to provide a construction in which the said units serve a double purpose; that is to say, they not only carry the signals which call attention to the various memos that may be made and placed in the mechanism for future attention, but each unit is so constructed as to act as the setting means whereby each individual signal may be brought into operaton.

These and other objects will be clear after reading the specification taken in connection with the annexed drawings, wherein:

Figure 1 is a front view showing the mechanism in elevation.

Figure 2 is a plan view looking down on the top of Figure 1.

Figure 3 is a part sectional view on the line 3—3 of Figure 1, showing two signal units, one at the top and one at the bottom of the cabinet.

Figure 4 is a part sectional view through one of the unitary devices carrying a signal and switching mechanism.

Figure 5 is a view of the left-hand end of Figure 4.

Figure 6 is a diagram showing two of the signals and the manner of connecting them into circuit.

Figure 7 is a modified arrangement from that shown in Figure 6.

Referring now to the details wherein like numbers refer to corresponding parts in the different views:

1 is a cabinet built out of any suitable material. The cabinet contains a series of compartments 2 which are preferably arranged in a plurality of rows. As shown in Figure 1, there are four rows containing twelve of these compartments. Separating the compartments are panels 3 made of any suitable material to give the front of the cabinet an attractive appearance. The panels 3 have holes 4 therein through which may project a signal 21 in the form of a small incandescent lamp. There is one of these lamps for each of the compartments 2 and the lamps are placed adjacent the compartment so as to draw the attention of the observer to the memo or indicia which may be written on a card or paper and placed in the compartment at the time of setting the signal, as will be later explained.

On the top of the cabinet 1 is a time-piece 5 having a plurality of arcuately arranged contacts 6. The hour-hand 7 of the hour-shaft carries a contact 8 which is adapted to successively engage the contact 6 as the movable member 7 is turned by the time-piece. As shown in Figure 1, there are forty-eight of the contacts 6 corresponding in number to the number of compartments 2 and the lamps 21.

Preferably mounted on the top of the cabinet 1 are two containers 9 and 10 in which cards or strips of paper are carried for the purpose of making memos thereon, which memos are to be placed in the compartments 2, as will be later referred to.

The unitary structure as shown in Figure 4, is provided with means comprising a metallic tube 11 on the outer end of which is mounted an insulator 12, carrying a lamp socket 13, for receiving the lamp 21. Within the tube 11 is a metallic rod 14 which is insulated by the insulator 15 at the socket end and held by the insulator 16 at the opposite

end from the tube 11. On the end of the rod 14 adjacent the insulator 16, is attached a nipple 17 on which rests a spring 18 when the lamp 21 is set to signaling position. Associated with the tube 11 and in contact therewith, is a spring contact 19. The springs 18 and 19 are mounted on a suitable insulator 20 and serve to make current connection with the lamp 21. In Figure 3, the contacts 18 and 19 are, for the purpose of clarity, not shown. It is to be understood that there is a pair of these springs for each of the unitary structures carrying the lamp or signal 21.

In operation, when it is desired to use the signal reminding mechanism, a memo card is taken from one of the containers 9 and 10 and suitable indicia or reminder written thereon. Suppose that on this card there is written a memo to do something in the morning at 9:45. The card is placed in the compartment to the right of the signal bearing the indicia "9—45" and the unitary switch structure shown in Figure 4 is moved, in this case a sliding movement, to the position shown at the left-hand side of Figure 6. Then when the movable contact 8 of the clock engages the contact positioned at 9:45 of the time-piece, a circuit is completed from the secondary of the transformer 22 through the relay 23, movable contact member 8, through contact 6 positioned at 9:45, through the wire 24, spring 18, contact 17, rod 14, through the lamp 21, the tube 11, spring contact 19, back to the other side of the secondary of the transformer. This current will light the lamp 21, giving a visual signal, and if the switch 25 is in closed position, a relay contact 26 will operate the buzzer B, giving an audible signal also.

Preferably, the construction of the contact of the time-piece is such as to hold this signal on for quite a period of time, and if desired, the relay 23 may be provided with a locking-winding so as to hold the signal on indefinitely or until released by the observer.

On receiving the signal as above described, the observer restores the unitary switch structure to the position shown at the right-hand side of Figure 6 wherein it is seen that the switch contact 18 is now resting on the insulator 16, thereby opening the circuit. It will be observed that in the construction shown, the contact member 17 is provided with an annular notch 27 which engages spring 18 in such a manner as to limit the amount to which the unitary switch construction may be moved in the setting position. The movement in the opposite direction is controlled by the shoulder 28 on the insulator 12.

In Figure 7, the arrangement is similar to that shown in Figure 6, except that the relay 23 is omitted and the current to the lamp 21 may pass through the buzzer B as determined by the position of the switch 25.

The transformer 22 is preferably designed to take 110 volts on the primary side and to deliver any suitable voltage such as 6 on the secondary side. Furthermore, the front of the cabinet may be covered with a transparent member 29 which can be hinged at 30, so that the protecting cover 29 may be quickly moved so as to secure access to the lamp switch units to set any one or any number of them as desired and as previously explained. The protecting cover may have a key for locking this in position so that the signals cannot be tampered with after having been once set for future operation as controlled by the time-piece.

In addition to serving as an appointment reminding mechanism, this apparatus may be used in factories where it is desired to observe the operations of machines, particularly where it is desired to set piece-work rates. When so used, the source of current is wired through a contact on the machine and the number of pieces made can be observed, say in the superintendent's office, by the number of times the lamp or signal is operated while the movable contact 8 of the time-piece is on one of the contacts 6. For this class of work, contacts 6 are preferably arranged to give a longer timed contact than for other uses. It will be of course apparent that these contacts of the time-piece may be arranged in number and arcuate length to suit the purpose.

It will also be apparent that the details entering into the construction of an apparatus of this kind may be varied over a wide range, and I therefore do not desire to be unduly limited in the interpretation of the appended claims.

Having thus described my invention, what I claim is:

1. In a mechanism of the class described, a cabinet having a plurality of signals; a time-piece having stationary contacts in number at least as many as said signals, and a movable member carrying a contact to successively engage said stationary contacts; a switching device for each signal comprising; an elongated movable member carrying the signal at one end and switch contacts at the other end, said switch contacts being electrically connected with said signal; stationary contacts to engage said switch contacts when said movable member is in one set position and a source of current, said stationary contacts being connected to parts of a circuit which includes the source of current and the time-piece contacts as its said movable member successively engages said contacts.

2. In a mechanism of the class described, a cabinet having a plurality of signals; means for associating with any of said signals a reminding indicia, a time-piece having stationary contacts arcuately arranged and corresponding in number to said signals and having connections thereto, a member moved by

the hour-shaft of the time-piece to successively engage said stationary contacts, and a switching device for each signal comprising; a movable member carrying the signal in one portion and switch contacts connected to the signal at another portion; and contacts engaging said switch contacts when said movable member is moved to signal position to convey current from a source of energy through the signal when said movable member on the time-piece engages the proper contact associated with said signal.

3. For a reminding mechanism which includes a cabinet having; a plurality of indicia compartments and a time-piece having contact means for closing a circuit including a source of current through preset signals at a predetermined time; a combination switch and signal device adapted to be individually mounted in the cabinet adjacent each of said compartments, said combination device including a tube having an insulator at one end, a socket and lamp carried by said insulator, a rod extending through the tube but insulated therefrom and having a contact mounted on one end but insulated from the tube, said tube and rod acting not only as means for supporting the lamp, but to carry current thereto; other contacts for engaging the tube and contact on the end of said rod when said device is moved to signal position, said other contacts acting to complete the circuit via said time-piece contacts.

4. For a reminding mechanism which includes a cabinet having; a plurality of indicia compartments and a time-piece having contact means for closing a circuit including a source of current through preset signals at a predetermined time; a movable unitary structure for each of said compartments, said structure carrying at one end the signal to be excited, and at the other end, switching means for presetting a circuit via said time-piece contacts when said structure is moved to the presetting position.

5. For a reminding mechanism which includes a cabinet having; a plurality of indicia compartments and a time-piece having contact means for closing a circuit including a source of current through preset signals at a predetermined time; a unitary structure for each compartment slidably mounted in the cabinet adjacent each of said compartments, said unitary structure comprising a tube having a lamp mounted in one end and switch contacts at the other with means for electrically connecting the lamp and contacts, separate switch contacts carried by the cabinet and acting with the contacts carried on the tube to establish a circuit via said time-piece contacts, said circuit being preset by force applied to the lamp end of said tube.

In testimony whereof I affix my signature.

CYRIL HAMLIN.