Nov. 29, 1966 H. B. BULLINGER 3,289,025

CONTACT ARRANGEMENT FOR AN ELECTROLUMINESCENT INDICATOR DEVICE

Filed July 23, 1963 2 Sheets-Sheet 1

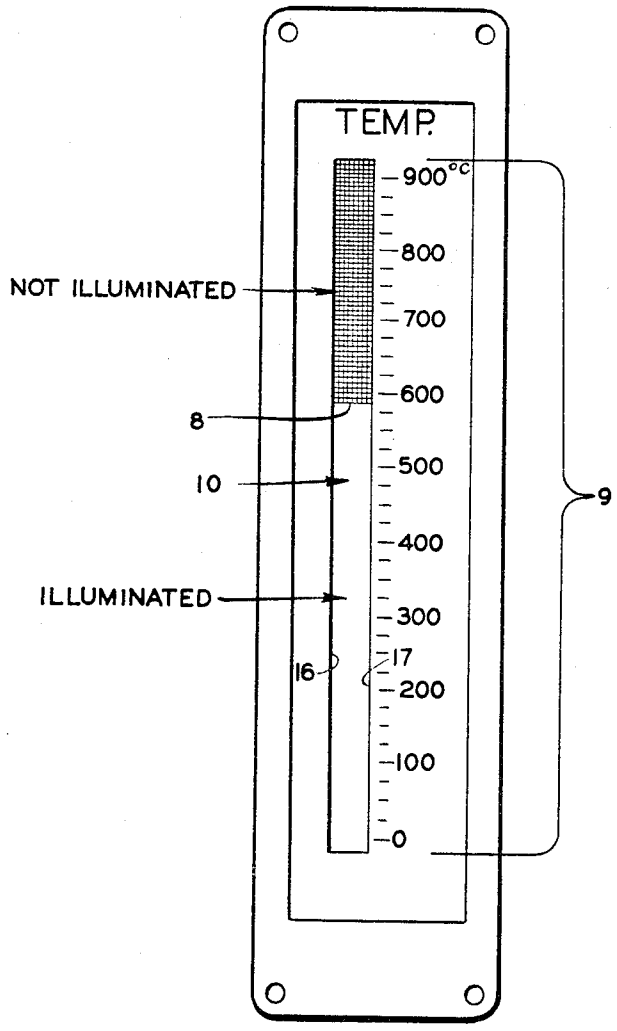

FIG. 1

INVENTOR.
HANS B. BULLINGER
BY Herbert L. Davis
ATTORNEY

Nov. 29, 1966 H. B. BULLINGER 3,289,025

CONTACT ARRANGEMENT FOR AN ELECTROLUMINESCENT INDICATOR DEVICE

Filed July 23, 1963 2 Sheets-Sheet 2

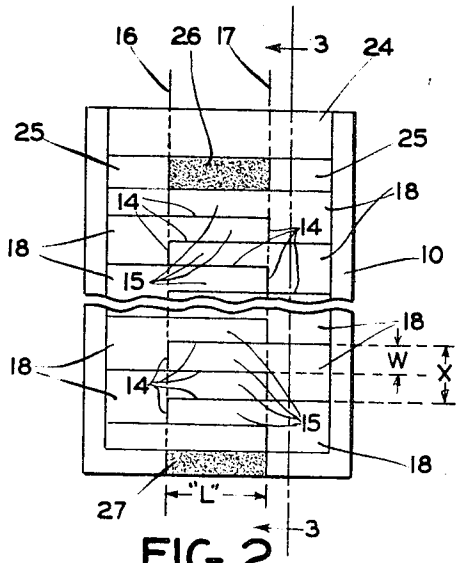

FIG. 2

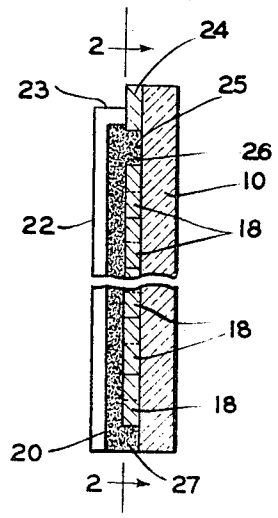

FIG. 3

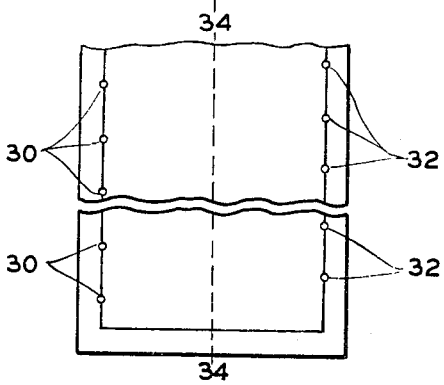

FIG. 4

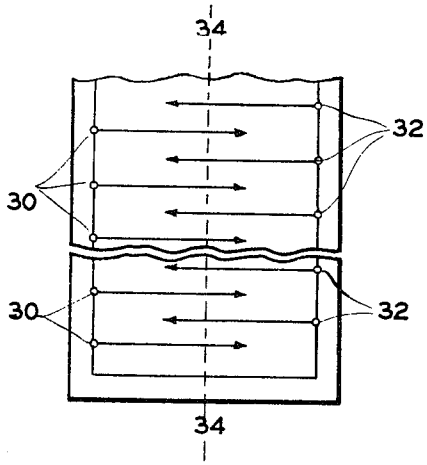

FIG. 5

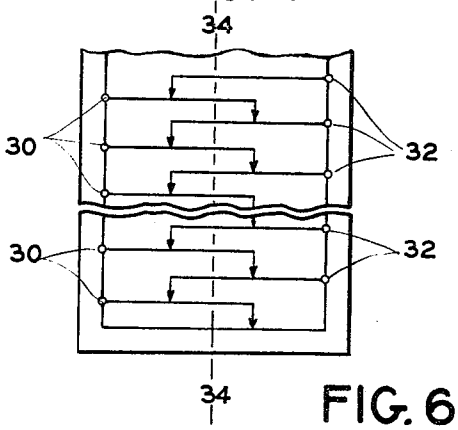

FIG. 6

INVENTOR.
HANS B. BULLINGER
BY Herbert L. Davis
ATTORNEY

United States Patent Office 3,289,025 Patented Nov. 29, 1966

3,289,025

CONTACT ARRANGEMENT FOR AN ELECTRO-LUMINESCENT INDICATOR DEVICE

Hans B. Bullinger, Nutley, N.J., assignor to The Bendix Corporation, Teterboro, N.J., a corporation of Delaware

Filed July 23, 1963, Ser. No. 297,099
6 Claims. (Cl. 313—108)

The invention relates to an improved contact arrangement for an electroluminescent indicator device and more particularly the invention is concerned with contact problems arising in the construction of certain electroluminescent indicator devices wherein space requirements do not allow for contact areas of convenient width as in an indicator display means in which a linear scale of variable height is provided to graphically represent the datum to be indicated, and an arrangement in which the display column is made up of a series of electroluminescent segments.

In the conventional arrangement, the electroluminescent segments may be of a type having films of phosphor-bearing material sandwiched or positioned between two layers of electrically conductive material, one or both of which is transparent to the emitted light. In such an arrangement, application of a varying voltage to the conductive layers will under proper conditions cause the phosphor material to emit light.

When high resolution is required in such an electroluminescent indicator, it becomes necessary to construct a large number of indicating elements per inch of indicating column, such as shown and described, for example, in U.S. Patent No. 3,221,170 granted November 30, 1965 on a copending U.S. application Serial No. 254,373 filed January 28, 1963, by Frederick Blancke Sylvander, and assigned to The Bendix Corporation, assignee of the present invention.

Thus in the display column of the electroluminescent indicator, if a resolution of, for example, 32 lighted segments per inch is required and if each segment is to be electrically isolated from each other, then each indicating element will have a width of less than $\frac{1}{32}$", say 0.025", with 0.006" of insulation between each element.

Such a display column for an electroluminescent device might be made by (a) using a transparent conductive tin-oxide on the glass-substrate as a common electrode for all indicating elements, (b) applying an electroluminescent phosphor-dielectric mixture over it, and (c) finally, applying strips of metal of 0.025" width over the electroluminescent phosphor-dielectric layer at a distance of 0.006" between each of the strips and as many as needed to form the entire length of indicating column desired. Step (c) might be accomplished by evaporation of e.g. aluminum onto the electroluminescent layer through a suitable mask. Electrical contact could then be made to the common electrode (tin-oxide), and to the individual metal segments (suitable electronic means might then be employed to excite the individual segments in sequence to provide a column or band of indicating light rather than at random so as to thereby indicate the output of a physical measuring device, e.g. rising or falling temperature).

However, in order to make electrical contact to each of the individual segments, there would be required contact pins of equal or less width (diameter) than the segments which would provide difficulties in assemblage of such device.

An object of the invention is to provide a novel contact arrangement whereby contact areas of about twice the width of the actual indicating element may be effected.

Another objective of the invention is to provide a novel contact and indicating element arrangement on an electrically conductive material such as a tin-oxide coated surface.

Another object of the invention is to effect the novel contact and indicating element arrangement by chemically treating an electrically conductive coating such as tin-oxide so as to etch out the contact and indicating segment pattern.

Another object of the invention is to provide a glass section coated with a layer of transparent conductive material in which the conductive material has been removed along predetermined lines so as to produce an electrically conductive pattern which provides for the actual indicating segments contact areas of approximately twice the width of the indicating segments, and in which pattern the indicating segments are electrically isolated from each other by fine lines, for example, having a width not greater than 0.006".

These and other objects and features of the invention are pointed out in the following description in terms of the embodiment thereof which is shown in the accompanying drawings. It is to be understood, however, that the drawings are for the purpose of illustration only and are not a definition of the limits of the invention. Reference is to be had to the appended claims for this purpose.

In the drawings:

FIGURE 1 is a front plan view of an electroluminescent temperature indicator to which the invention may be applied.

FIGURE 2 is a sectional view taken along the lines 2—2 of FIGURE 3 looking in the direction of the arrows and illustrating an enlarged plan view of the novel contact and indicating element arrangment at the back of the display column of FIGURE 1 and embodying the present invention.

FIGURE 3 is an enlarged sectional view of the contact and indicating element arrangement taken along the lines 3—3 of FIGURE 2.

FIGURE 4 is a schematic illustration showing two sets of engraving styluses placed in parallel on an electrically conductive coating applied to the glass section of FIGURE 2 prior to initiating the engraving steps of the method.

FIGURE 5 is a schematic illustration showing the step of moving the two sets of engraving styluses of FIGURE 4 towards each other and beyond a center line so as to result in the parallel lines shown, along which the electrically conductive coating is removed mechanically by the styluses.

FIGURE 6 is an additional schematic illustration showing the step of moving the styluses perpendicularly relative to the engraved lines of FIGURE 5 to complete the contact and indicator segment pattern shown in FIGURE 2.

Referring to the drawings of FIGURE 1, there is indicated by the numeral **8** a variably lighted indicator display column which may be viewed by the operator through a glass **10** and so arranged in cooperative relation with suitable indicator numerals **9** so as to provide the desired indicator function.

The display column **8** includes a series of electroluminescent segments which may be sequentially arranged, for example, with thirty-two of the segments arranged to the inch, and said segments being positioned in cooperative relation with suitable indicator lines, markings, or designations **9**, as shown in FIGURE 1.

Thus, the electroluminescent segments may be sequentially lighted so as to constitute suitable display means cooperating with the indicator numerals **9** of FIGURE 1 to indicate the sensed condition which, in the example given, may be temperature.

Referring to FIGURES 2 and 3, the present invention relates to improvements in the structure of the electro-

luminescent segments applicable to such an indicator device in which space requirements do not allow for contact areas of convenient width. With reference to FIGURES 4, 5, and 6, the present invention relates to a method whereby contact areas of about twice the width of the actual indicating elements may be provided, as hereinafter explained.

Referring then to FIGURE 2, there is shown an enlarged front view of a section of glass **10** coated with a layer of transparent electrically conductive material such as tin-oxide so processed as to form a pattern for the electroluminescent segments of the display column **8** of FIGURE 1. In forming such pattern, a minute portion of the tin-oxide layer is removed along a set of fine insulating lines **14** so as to provide a pattern of L shaped electrically conductive segments arranged in a close interrelation in which each of the L shaped segments are insulated one from the other by the insulating lines **14**.

Each of the L shaped segments include (a) an indicating segment **15** between the dotted lines **16** and **17** of FIGURE 2 having the length L and width W and (b) a contact area indicated by the numeral **18** having a width X equal to twice the width W of the indicating segment **15** plus the width of the insulating line **14** between adjacent indicating segments **15**. The contact areas **18** of the L shaped segments having a greater width than the indicating segments **15** are alternately arranged at opposite sides of the column of indicating segments **15** so as to permit the indicating segments **15** to be arranged in a parallel minutely spaced relationship, as shown by FIGURE 2. Such novel arrangement of the indicator segments and contact areas effects a maximum use of the space provided so as to meet minimum space requirements. Moreover, it will be seen that, in this pattern, the indicating segments are electrically isolated from each other by the fine insulating lines **14**, the width of which may be kept to minimum. In the example given, the lines **14** would have a width of 0.006" while the width of the indicating segments would be 0.025" and the contact areas would have a width of 0.056".

Further, as shown in FIGURE 3 in order to complete the device for electrical excitation, an electroluminescent phosphor-dielectric layer **20** may be applied so as to slightly overlap the contour of the entire column of indicating segments. Subsequently, an electrically conductive layer **22**, such as aluminum, is deposited over the electroluminescent phosphordielectric layer **20** so as to form a common and reflecting back electrode **22** for the device.

The contour of the aluminum electrode **22** will thereby match precisely the contour of the column of indicating segments **15** and will further overlap the phosphor-dielectric layer **20** at one end **23** to engage a contact portion **24** of the tin-oxide coating. The contact portion **24** is separated from the indicating segment **15** and contact portion **18** by a scoremark **25** in the tin-oxide coating in which is deposited a portion **26** of the electroluminescent phosphor-dielectric material forming the layer **20**. The electroluminescent phosphor-dielectric material of the layer **20** overlaps the lower end of the tin-oxide coating and a portion thereof **27** engages the glass section **10**, as shown in FIGURES 2 and 3.

Applying electric power to the contact portion **24** and selectively to the contact portions **18** through suitable electronic control means will excite the phosphor-dielectric material **20** between the individual tin-oxide indicator segments **15** and the common electrode **22** to provide the illuminated display column **8**, as shown in FIGURE 1.

Methods of constructing the improved electroluminescent indicator device are described and claimed in copending U.S. application filed as a division of the present application. Thus in order to form the individual L shaped conductive segments including the indicator and contact portions **15** and **18**, respectively, in the layer of transparent electrically conductive tin-oxide coated on the glass **10**, there may be provided two sets of engraving styluses **30** and **32** placed as indicated in the schematic illustration of FIGURE 4. These sets of engraving styluses may be placed in parallel on the tin-oxide surface, as shown in FIGURE 4.

Further, the two sets of engraving styluses **30** and **32** may be moved toward each other and beyond a center line **34** so as to result in parallel engraved lines, as shown in FIGURE 5, along which the tin-oxide coating is removed mechanically by the styluses until, as shown in FIGURE 6, finally the styluses are moved perpendicularly relative to the parallel engraved lines **14** to complete the contact and indicator segment pattern, as shown in FIGURE 2. Contact and indicating segments of various dimensions may be produced by this method.

As an alternative method, a section of glass coated with a transparent electrically conductive tin-oxide may have applied thereto a suitable light sensitive material such as may be purchased under the tradename "Kodak Photo-Resist" from Eastman Kodak Company of Rochester, New York.

The contact and indicating segment pattern of FIGURE 2 may be then formed by a photo etching process such as described in a publication by the Eastman Kodak Company of Rochester, New York, entitled "Photo-Sensitive Resists for Industry" of 1962. In the application of the photo-etching process of the alternative method, the tin-oxide on the glass section **10** may be first degreased and cleansed by suitable means and then coated with the aforenoted "Photo-Resist" material or other suitable light sensitive material. A thin coating of such material is preferred, since it has been found that thin coatings of such material yield highest resolution.

In preparation for the etching process, a drawing representing the electrically conductive segmental pattern of FIGURE 2 is photographed onto a high contrast film, and the resulting negative used to contact print an image of the pattern onto the "Photo-Resist" coated tin-oxide. Conveniently, the drawing is made many times the normal size of the pattern and upon photographic reduction to actual size, a very precise image is obtained of the pattern on the resulting negative.

Exposure of the negative so as to contact print the pattern on the "Photo-Resist" coated tin-oxide layer is effected by applying through the negative and to the material light rays from a high enery source, such as a carbon arc which emits light in the region of peak spectral sensitivity of the "Photo-Resist" material.

After the contact printing of the image of the pattern onto the "Photo-Resist" material, the "Photo-Resist" material is developed, postbaked, followed by etching with powdered zinc and hydrochloric acid.

The "Photo-Resist" material in the exposed areas (the light areas of FIGURE 2) will not be affected by the etching process but unexposed "Photo-Resist" material and the portions of the tin-oxide underneath the unexposed minute areas of the "Photo-Resist" material corresponding to the fine lines **14** of FIGURE 1 will be etched away by the action of the powdered zinc and hydrochloric acid. The remaining exposed portions of the "Photo-Resist" material forming the desired pattern of electrically conductive tin-oxide segments and contact areas is then removed by applying thereto a commercial stripper, e.g. Methyl-ethyl-ketone, whereupon the etched lines **14** and the remaining tin-oxide contact and indicating segments provide the electrically conductive segmental pattern, shown in FIGURE 2.

Although only one embodiment of the invention has been illustrated and described, various changes in the form and relative arrangements of the parts, which will now appear to those skilled in the art may be made without departing from the scope of the invention. Reference is, therefore, to be had to the appended claims for a definition of the limits of the invention.

What is claimed is:

1. An electroluminescent indicator device comprising a plurality of electrically conductive members,
each of said members including an indicator portion and a contact portion at one end of said indicator portion,
said contact portion having a width substantially twice the width of the indicator portion,
the members being arranged so that the contact portions thereof are disposed at opposite ends of adjacent indicator portions,
said contact portions all extending in a like direction and parallel one to the other,
and each of the indicator portions being positioned in parallel spaced relation one to the other and having an end thereof positioned in spaced relation to a contact portion of another of said members.

2. The combination defined by claim 1 including a common electrode positioned in spaced relation to said indicator portions,
and electroluminescent material between the contact portions and the common electrode so that electrical energy selectively applied thereto is effective to cause excitation of the electroluminescent material therebetween.

3. An electroluminescent indicating device comprising a transparent tin-oxide coated glass section,
a plurality of segments of said tin-oxide coating,
each of said segments including indicator and contact portions,
said contact portions having a width approximately twice the width of the indicating portions,
each of said segments being electrically isolated one from the other by fine lines in the tin-oxide coating,
the segments being arranged so that the contact portions thereof are disposed at opposite ends of adjacent indicator portions,
said contact portions all extending in a like direction and parallel one to the other,
a layer of electroluminescent material extending over the indicator portions,
and a common electrode positioned over the electroluminescent material so that upon electrical energy being selectively applied across the contact portions of one or more of the indicator portions and said common electrode the electroluminescent material therebetween may be excited so as to effect an indication viewable through the glass section.

4. An electroluminescent indicator device comprising a plurality of L shaped electrically conductive members,
each of said members including an indicator portion and a contact portion at one end thereof,
the contact portion of each of said members having a greater width than the width of the indicator portion,

the members being arranged so that the contact portions thereof are disposed at opposite ends of adjacent indicator portions,
said contact portions all extending in a like direction and parallel one to the other,
and each of the indicator portions extending in parallel spaced relation one to the other and having an end portion at an end opposite from said contact portion positioned in spaced relation to a corresponding contact portion of another of said L shaped members.

5. The combination defined by claim 4 including electroluminescent material overlapping the indicator portions of said plurality of electrically conductive members,
and an electrically conductive layer positioned over the electroluminescent material so as to form a common reflecting back electrode for the device.

6. An electroluminescent indicator device comprising a transparent glass section,
a plurality of electrically conductive transparent L shaped members mounted on said glass section,
each of said members having an indicator portion extending in parallel spaced relation to the indicator portions of said other members,
said members including at one end thereof a contact portion substantially twice the width of the indicator portion thereof,
the members being arranged so that the contact portions thereof are disposed at opposite ends of adjacent indicator portions,
said contact portions all extending in a like direction and parallel one to the other,
a layer of electroluminescent material extending over the indicator portions of said members,
and a common electrode positioned over the electroluminescent material so that electrical energy may be selectively applied across the contact portions of one or more of the members and the common electrode so as to cause the electroluminescent material to be excited in a variable column of light viewable through the transparent glass section.

References Cited by the Examiner

UNITED STATES PATENTS

2,684,450	7/1954	Mager et al.	313—108
2,842,464	7/1958	Dickinson et al.	117—211
2,850,409	9/1958	Boicey et al.	117—211
2,999,958	9/1961	Bowerman et al.	313—108
3,038,097	6/1962	De Graffenried	313—109.5
3,087,085	4/1963	Turner	313—108

JAMES W. LAWRENCE, *Primary Examiner.*

DAVID G. GALVIN, *Examiner.*

R. JUDD, *Assistant Examiner.*