(No Model.) 2 Sheets—Sheet 1.

J. APSEY.

FORCED DRAFT DEVICE FOR FURNACES.

No. 590,355. Patented Sept. 21, 1897.

Fig. 4.

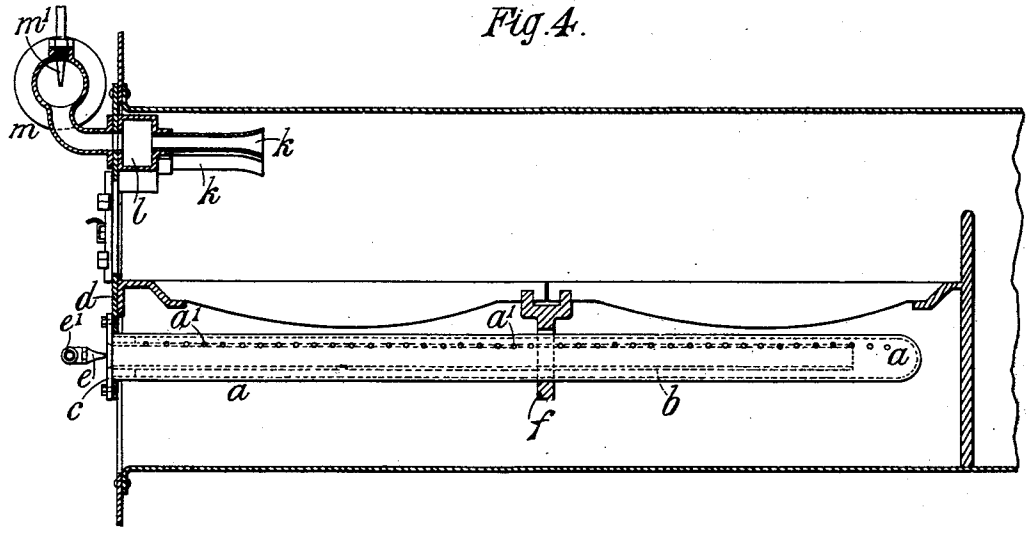

Fig. 5.

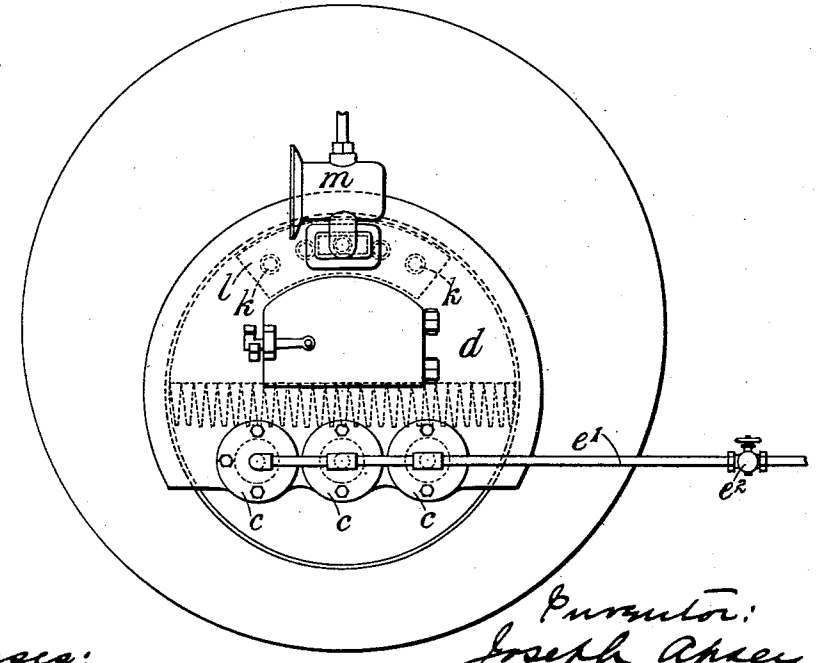

Witnesses:
C. H. C. Mitchell.
C. B. Eaton

Inventor:
Joseph Apsey
by H. C. Mitchell,
Attorney

THE NORRIS PETERS CO., PHOTO-LITHO., WASHINGTON, D. C.

(No Model.) 2 Sheets—Sheet 2.

J. APSEY.

FORCED DRAFT DEVICE FOR FURNACES.

No. 590,355. Patented Sept. 21, 1897.

Fig. 1.

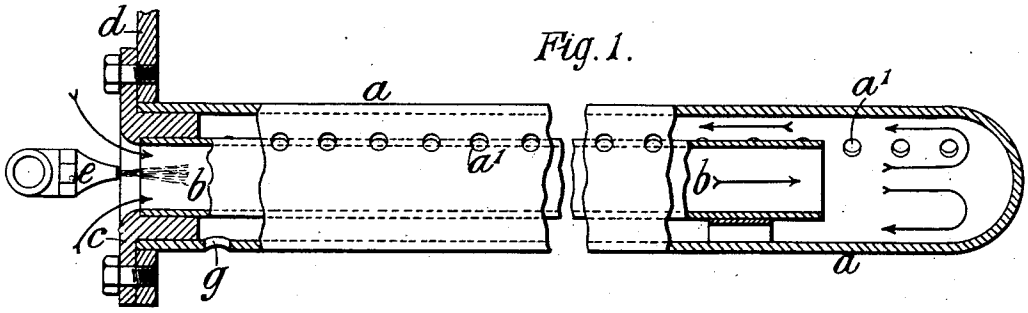

Fig. 2.

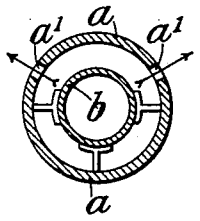

Fig. 3.

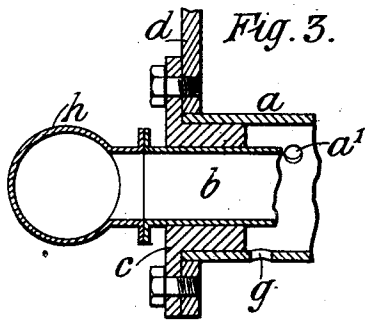

Fig. 6.

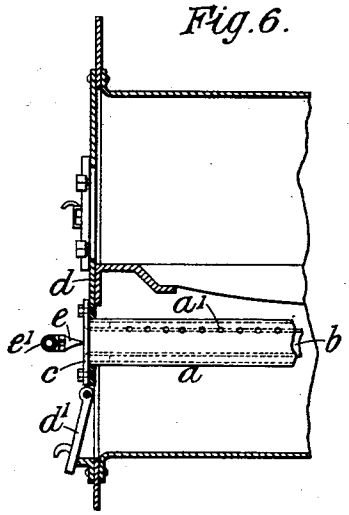

Witnesses:
C. H. Mitchell.
C. B. Eaton

Inventor:
Joseph Apsey
by P. C. Mitchell
Attorney.

THE NORRIS PETERS CO., PHOTO-LITHO., WASHINGTON, D. C.

UNITED STATES PATENT OFFICE.

JOSEPH APSEY, OF LONDON, ENGLAND.

FORCED-DRAFT DEVICE FOR FURNACES.

SPECIFICATION forming part of Letters Patent No. 590,355, dated September 21, 1897.

Application filed December 26, 1896. Serial No. 617,035. (No model.)

To all whom it may concern:

Be it known that I, JOSEPH APSEY, engineer, a subject of the Queen of Great Britain, residing at London, England, have invented a certain new and Improved Means for Obtaining a Forced Draft in Steam-Boiler or other Furnaces, of which the following is a specification, reference being had to the accompanying drawings, in which—

Figure 1 is a side elevation, partly in longitudinal central section, of one form of my improved apparatus. Fig. 2 is a transverse section of the same. Fig. 3 is a longitudinal central section showing a slight modification of my invention. Fig. 4 is a longitudinal central section, and Fig. 5 a front elevation, of a steam-boiler having my improvements applied thereto; and Fig. 6 is a longitudinal central section illustrating another slight modification of my said invention.

My invention relates to improved means for obtaining an increased draft and better combustion in steam-boiler and other furnaces, and is chiefly designed to insure that the air shall be distributed at an elevated temperature and under a suitable pressure equally or uniformly beneath the whole area of the grate. My said invention, however, also comprises means for introducing heated air over the fire.

In some forms of apparatus heretofore constructed for obtaining a forced draft the air has been introduced beneath the grate through tubes extending inward a short distance from the front of the ash-pit, into which tubes currents of air are induced by means of steam-jets, the ash-pit being closed, so that all the air required for supporting combustion must pass through the said tubes. With such an arrangement the greater part of the air supplied through the said tubes impinges upon the fuel near the inner ends of such tubes, the remainder being distributed beneath other parts of the grate. The consequence is that the combustion of the fuel near to the inner ends of the tubes is unduly accelerated, with liability to burning away of the fire-bars and wasting of the fuel by the formation of holes through the fire. In other instances air-chests having their upper sides perforated have been arranged beneath the grate in an open ash-pit; but in such an arrangement the air is not efficiently or equally distributed, because the force of the currents of air entering the said air-chests prevents the rising of the air through the perforations near the front of the grate, and this arrangement has the further disadvantage that the perforations are liable to be choked by the ashes falling upon the top of the air-chests. Moreover, in both of the forms of construction above referred to the temperature of the air is not appreciably elevated before it comes in contact with the fuel.

Now according to one part of my said invention I provide, as hereinafter described, for first heating the air and then distributing it under a suitable pressure equally or uniformly beneath the whole area of the grate. For this purpose I employ one or more perforated casings suitably arranged beneath the fire-grate and having one or more tubes arranged within each of them, and I force the air under a suitable pressure through such tubes, so that it is warmed therein and discharged from the inner end thereof into the perforated casing or casings, in which it returns along the space between the tube or tubes and the casing or casings, being heated by radiation during its return. The heated air passing out through the perforations of such casing or casings is distributed uniformly beneath the grate, so that the combustion of the fuel is approximately uniform throughout the fire. By this method of supplying the air for promoting combustion not only do I keep the fire free from clinker and prevent burning of the fire-bars, but I considerably reduce the consumption of fuel, and I am enabled to use slack or other fuel of an inferior quality, as owing to the efficient distribution of the air there is less liability to blowing of the dust or small coal over the fire-bridge unconsumed.

According to another part of my said invention I provide at the upper part of the front end of the furnace, either on the inside or outside thereof, a closed chamber or box, which is preferably made of cast-iron and which is in communication by means of a suitable passage with a steam-jet injector suitably arranged on the exterior of the furnace, whereby air may be drawn or forced into said chamber or box from the exterior. In the

inner side or wall of the said box or chamber are mounted one or more tubes, which extend for a suitable distance over the grate before opening into the furnace, so that the air as it passes through the said tube or tubes will be heated, say, to about the same temperature as the smoke and gases in the furnace.

In the accompanying drawings, *a* is the perforated casing. *b* is the inner tube. These parts are preferably brazed or otherwise firmly secured to a flanged piece *c*, whereby they may be readily attached to the front plate *d* of the furnace, as shown in Figs. 4 and 5.

The apparatus shown in Figs. 1 and 2 is provided with a jet or injector nozzle *e*, fixed in any convenient manner in line with the tube *b* and near the outer end thereof. Through this nozzle steam or air from a blower, fan, or compressor is to be injected for the purpose of causing an induced current of air to enter the said tube.

In the modification of my apparatus shown in Fig. 3 the pipe *b* is connected to a pipe *h*, through which air is to be forced by means of a blower, fan, or compressor.

In the arrangement shown in Figs. 4 and 5 three of my perforated casings *a* with inner tubes *b* and jet or injector nozzles *e* are arranged beneath the fire-grate of the boiler. The nozzles *e* are connected with a common supply-pipe *e'*, provided with a controlling valve or cock e^2. Each casing *a* is closed, with the exception of the perforations *a'*, of which there are preferably two rows, one at either side, as shown in Figs. 1 and 2, and each casing extends along beneath the fire-grate to or nearly to the inner end thereof. The inner tube *b* extends to within a suitable distance from the inner end of the casing *a*.

I sometimes make the bearer-bar *f* for supporting the fire-bars with a downward extension having holes therein, through which are passed the casings *a*, so that the said bearer-bars will serve also for supporting the said casings.

By the arrangement above described the air drawn in by the action of the jet of steam or air passes throughout the length of the inner or injector tube *b*, being warmed on its way, and then returns along the space between such tube and the perforated casing *a*, in which it is further heated by radiation, and, the pressure accumulating in the said casing, the air is forced through the perforations in the said casing, passes through the grate, and comes into contact with the fuel thereon.

By arranging the perforations at the sides of the casing, as shown, I insure a very effective distribution of the air, while obviating any risk of the said perforations being choked or clogged by ashes or cinders falling from the grate. If desired, however, the said perforations may be arranged in any other suitable position.

It is advantageous to provide an opening *g* in the under side of the casing *a* at or near the outer end thereof, so that any ashes that may enter the said casing will be carried by the air-currents to such opening and will fall through the same into the ash-pit.

In Fig. 6 I have shown my improvements applied to a boiler with a closed ash-pit, a door or flap *d'* being provided to permit the withdrawal of the ashes.

My improvements above described can be applied to existing boilers without the necessity for any structural alterations therein, a separate plate or frame being secured, if necessary, to the front end of the furnace to support the perforated casing or casings.

By my said improvements I provide a very efficient apparatus for the purposes specified, which entirely obviates any risk of wasting fuel or burning the fire-bars by localization of the draft to one or more points or to a small area of the grate.

If desired, two or more of the aforesaid injector-tubes can be arranged within each perforated casing.

Referring to Figs. 4 and 5, *k k* are tubes arranged in a curved series or group beneath the furnace-crown and fixed in a chamber or box *l*, communicating with an injector *m*, whereby air is introduced into the said chamber or box and forced through the tubes *k* by the action of a jet of steam or air issuing from the nozzle *m'*. The air which is caused to enter the said box or chamber, after being heated by its passage through the said tubes, mixes with the gases in the furnace and assists in the combustion of the same, instead of cooling them, as it would if the air were simply introduced into the furnace through a hole in the front thereof. By causing the air to pass through the said tube or tubes, therefore, we insure its being very efficiently heated before it mixes with the smoke and gases from the fuel, and by using several of such tubes in the furnace the heated air is thoroughly diffused and caused to mix very uniformly and intimately with the smoke and gases to be consumed. Moreover, the appearance of smoke at the chimney will be entirely prevented and increased economy of fuel will be obtained. I find it advantageous to fix the said tube or tubes in the said box or chamber in such a manner that they can be very readily removed and renewed when required at a nominal cost.

What I claim is—

1. The combination, with the fire-grate of a steam-boiler or other furnace, of a perforated casing extending beneath said fire-grate and closed at both ends, a tube extending within said casing from the outer nearly to the inner end thereof, and means, substantially such as above described, for forcing air into said tube, for the purposes above specified.

2. The combination of a perforated casing adapted to be secured beneath the fire-grate of a steam-boiler or other furnace, and a tube fixed within said casing and extending from

the outer nearly to the inner end thereof, substantially as, and for the purposes, above specified.

3. The combination, with the fire-grate of a steam-boiler or other furnace, of a perforated casing closed at both ends and extending beneath said fire-grate, a tube fixed within said casing and extending from the outer nearly to the inner end thereof, and a jet or injector nozzle at the outer end of said tube, substantially as, and for the purposes, above specified.

In testimony whereof I have hereunto set my hand in presence of two subscribing witnesses.

JOSEPH APSEY.

Witnesses:
DAVID YOUNG,
ALEXANDER W. ALLEN.