2 Sheets—Sheet 1.

E. HARRISON.

GRINDING-MILLS.

No. 193,653. Patented July 31, 1877.

fig. 1

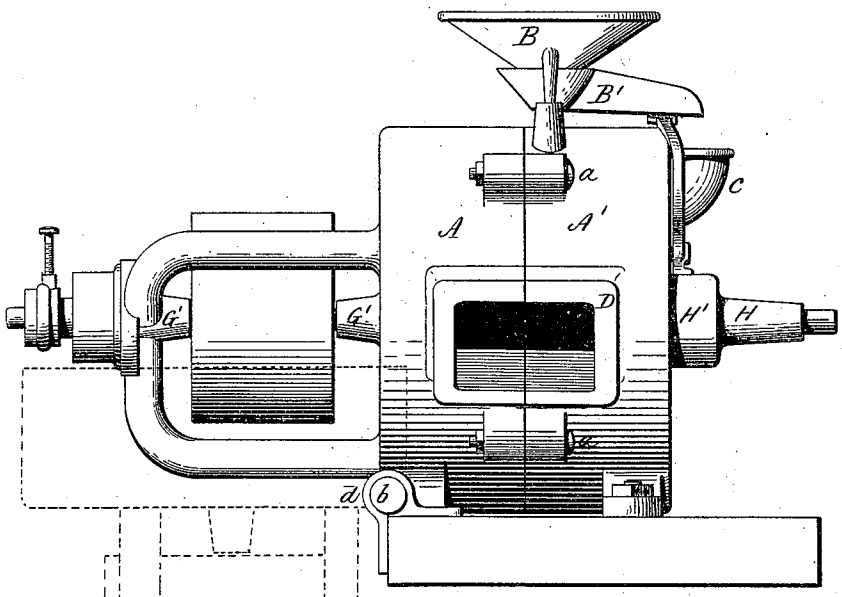

fig. 2

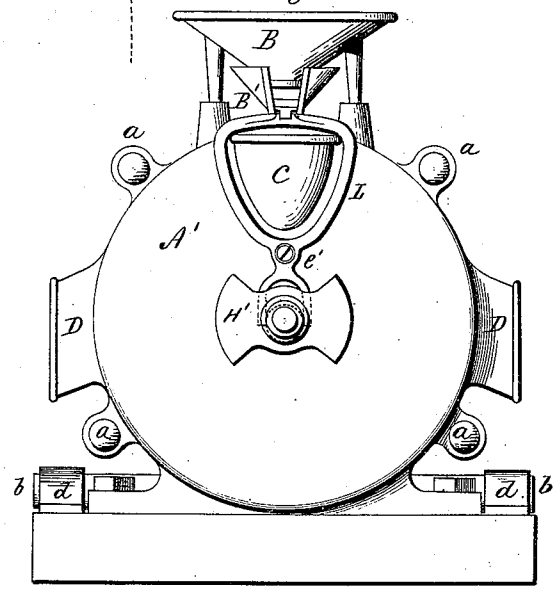

Witnesses.
J. H. Shumway
Chas. A. Broughton.

Edward Harrison
Inventor.
By Atty.
Wm. E. Earle

N. PETERS, PHOTO-LITHOGRAPHER, WASHINGTON, D. C.

2 Sheets—Sheet 2.

E. HARRISON.

GRINDING-MILLS.

No. 193,653. Patented July 31, 1877.

Fig. 3.

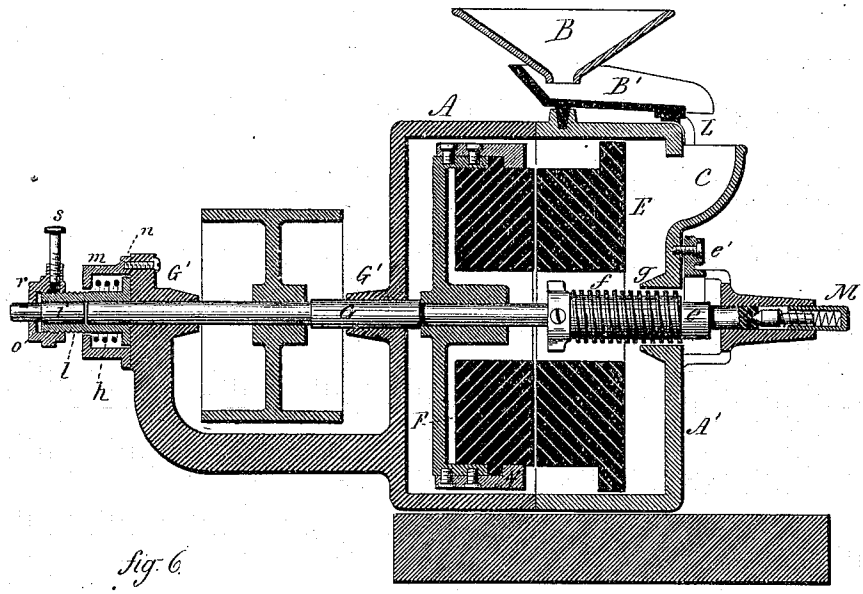

Fig. 6.

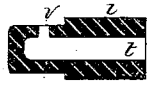

Fig. 4.

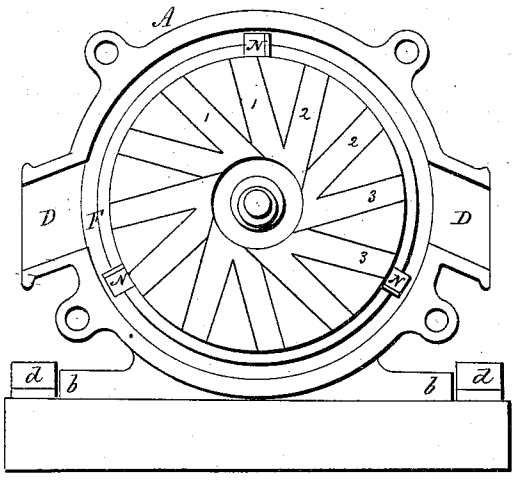

Fig. 5.

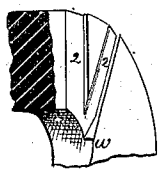

Witnesses.

J. H. Shumway

Clara Broughton

Edward Harrison Inventor.

By Atty.

Wm. E. Earle

N. PETERS, PHOTO-LITHOGRAPHER, WASHINGTON, D. C.

UNITED STATES PATENT OFFICE.

EDWARD HARRISON, OF NEW HAVEN, CONNECTICUT.

IMPROVEMENT IN GRINDING-MILLS.

Specification forming part of Letters Patent No. **193,653**, dated July 31, 1877; application filed April 12, 1877.

To all whom it may concern:

Be it known that I, EDWARD HARRISON, of New Haven, in the county of New Haven and State of Connecticut, have invented a new Improvement in Grinding-Mills; and I do hereby declare the following, when taken in connection with the accompanying drawings and the letters of reference marked thereon, to be a full, clear, and exact description of the same, and which said drawings constitute part of this specification, and represent, in—

Figure 1, a side view; Fig. 2, an end view; Fig. 3, a longitudinal central section; Fig. 4, a transverse central section between the stones; Fig. 5, a perspective view of a portion of one of the stones, showing the improvement in the dress; and in Fig. 6, a detached view of the step.

This invention relates to an improvement in the grinding-mill known as "Harrison's mill," invented by this applicant, and particularly to improvements additional to the improvements for which Letters Patent of the United States were granted to this applicant, dated September 1, 1868, and January 16, 1872, and parts of which are applicable to other constructions of vertical mills; and it consists in the improvements, as hereinafter described, and more particularly recited in the claims.

The mill-case is constructed in two parts, A A′, the two parts secured by outside lug-bolts *a*, or otherwise. The bed-stone and runner-stone are arranged within the case in substantially the usual manner relatively to the case. The grain is placed in the hopper B, and is thence fed through the rocker B′ to the feed-spout C. On opposite sides of the case a discharge-spout, D, is formed as a part of the case. The object of the two spouts is to give two discharges, either or both of which may be used.

In the use of two spouts for simultaneous delivery a much freer exit is given to the meal than by a single spout, and the carrying of the meal around the mill to the single spout is avoided by discharging at two opposite points. The mill is better cooled, because a better circulation is maintained by two openings than by one; and other advantages of the simultaneous use of two spouts at opposite points will be apparent to those familiar with the use of grinding-mills.

It frequently occurs that a mill can be placed only in a certain position, and that in one position the discharge will be required to be on one side of the case, and in another position on the opposite side. Hence it would be necessary to make mills right and left hand; but by placing a spout upon the two sides the same mill is made applicable to either of the supposed conditions. In one case one spout would be closed, and in the other the other spout. There is therefore a great advantage in combining the two spouts in a single case.

The part A of the case, which carries the runner-stone, is constructed with a trunnion, *b*, extending at right angles from each side, and these trunnions are hung in sockets *d*. Therefore, when it is necessary to re-dress the runner-stone it is only required to remove the bolts which secure the two parts of the case together, and then turn the part A of the case outward upon the trunnions as hinges, bringing the face of the runner-stone into a horizontal plane, as indicated in broken lines, Fig. 1.

E is the bed-stone, and F the runner-stone, the runner-stone mounted on the spindle G, supported in outside bearings G′ G′. The runner-stone is mounted in a shell as a means for securing it to the runner-spindle. The spindle continues through the bed-stone, and through the opposite end of the case, into a bearing, H. This bearing H is a part of the hanger H′, formed on the part A′ of the case. The hanger leaves a space between the bearing and the case, and on the spindle in this space is an eccentric, *e*, which serves to move the rocker B′ by means of a yoke, L, pivoted upon the outside of the case A′, as at *e′*, and below the pivot forked over the eccentric, as seen in Fig. 2. The yoke L turns up around the feed-spout C and inward above the spout, to connect with the rocker, as also seen in Fig. 2. This arrangement protects the eccentric and its connections from dust and grit from the mill, and from the possible interference of outside objects.

To feed the grain from the feed-spout to the space between the stones, a feeding-screw, *f*,

is arranged on the spindle to revolve with it, the twist of the thread tending to draw the grain inward toward the runner-stone. On the inside of the part A′ of the shell, a flange, *g*, is formed around the spindle, the diameter corresponding substantially to the external diameter of the screw *f*, and within which the outer end of the screw *f* works; hence any tendency of the grain or dust to work outward through the spindle-opening in the part A′ of the shell is avoided, as the screw *f*, working closely within the flange-opening *g*, will draw any such substance inward toward the stone. The screw *f* is made adjustable longitudinally on the spindle.

It frequently occurs that some foreign substance much harder than the grain will pass into the mill; the result of this is chipping or other injury to the stones. To avoid such breakage of the stones, a spring, *h*, is arranged around a sleeve, *l*, placed on the step end of the spindle, as seen in Fig. 3, and within this sleeve the step *i* is placed. The sleeve *l* is constructed with a flange, *n*, upon the inner end, and against this flange the spring *h* bears, and over the spring a cap, *m*, is arranged, and secured to the hanger G′, so as to support the opposite side of the spring *h*. The tendency of the spring, therefore, is to force the sleeve *l* inward or toward the stone. The step is constructed with a shoulder, *o*, and over the smaller end of the spindle, and resting against the shoulder *o*, is a cap, *r*, screwed onto the outer end of the sleeve *l*. This cap *r* adjusts the relative position of the stones—that is, by turning the cap *r* in one direction, the runner-stone will be forced inward, and in the other direction it will be allowed to recede. A set-screw, *s*, through the cap secures it when properly adjusted. The tension of the spring *h* is sufficient to withstand lateral force for the grinding of the grain; but should a harder substance pass in between the stones, then the spring will yield and allow the stone to recede sufficiently to permit such hard foreign substance to pass out, and thus the difficulty before mentioned, and which would otherwise occur, is avoided.

To lubricate the step-bearing, the step *i* is made hollow, as seen enlarged in Fig. 6, and into the interior space *t* a passage, *v*, is made, through which oil may be poured to flow through the space or passage *t* to the end of the spindle, and thus make an easy lubrication. At the other end of the spindle a spring-bearing, M, is provided, to hold the runner-stone against the step, and prevent its actual contact with the face of the bed-stone.

On the outer surface of the runner-stone, shell, or plate F one or more scrapers, N, are arranged, which serve a double purpose: First, they overhang the rib on the stone, as seen in Fig. 3, and thereby hold the runner-stone to its plate; second, they run in close proximity to the shell, and thereby carry the meal to the discharge-spouts, which would naturally adhere to the inner surface of the case.

In the usual dress of stones with substantially radial grooves, the grooves have terminated at the center, each independent of the next; hence the passage to each groove can only be as deep as the cutting side of that groove. To enlarge this opening and make a freer passage for the grain to the grinding-surfaces, the grooves are cut in pairs—as 1 1, 2 2, 3 3, &c.—running together at the center, so the same incline to the plane of the surface of the stone continued through the two makes a deeper shoulder, as at *w*, Fig. 5, and to that extent increasing the passage from the center to the grinding-surface.

I claim—

1. In combination with the bed and runner stones of a horizontal grinding-mill, and the case which incloses them, two discharge spouts or openings, D, arranged upon opposite sides of the case and in the plane of the grinding-faces of the stones, as shown and described.

2. The combination, in a mill substantially such as described, of the hanger H′ outside the case with the eccentric and rocker yoke arranged to work therein, substantially as described.

3. The combination, in a mill substantially such as described, of the feed-screw *f* on the runner-spindle, the flange around the spindle, opening in the case, and the feed-spout, substantially as described.

4. In combination with the runner-stone of a grinding-mill and its spindle, the externally screw-threaded flanged sleeve *l*, cap *m*, spring *h*, shouldered step *i*, and screw-cap *r*, all substantially as described.

5. The step *i*, with its oil-passage *v t*, combined with the spindle of the runner-stone of a grinding-mill, substantially as described.

6. In combination with the runner-stone and its plate or shell, the scrapers N, constructed and arranged substantially as described, and so as to serve both to hold the runner-stone on its plate and as scrapers or carriers for the meal, substantially as specified.

EDWARD HARRISON.

Witnesses:
JOHN E. EARLE,
CLARA BROUGHTON.