PCT WORLD INTELLECTUAL PROPERTY ORGANIZATION
International Bureau

INTERNATIONAL APPLICATION PUBLISHED UNDER THE PATENT COOPERATION TREATY (PCT)

(51) International Patent Classification 3 :		(11) International Publication Number:
B62D 55/30	**A1**	**WO 82/ 04022**
		(43) International Publication Date: 25 November 1982 (25.11.82)

(21) International Application Number: PCT/NO82/00026

(22) International Filing Date: 11 May 1982 (11.05.82)

(31) Priority Application Number: 811604

(32) Priority Date: 11 May 1981 (11.05.81)

(33) Priority Country: NO

(71)(72) Applicant and Inventor: BRAATHEN, Thor, Frølich [NO/NO]; N-3358 N. Eggedal (NO).

(74) Agent: STRAND, Svein, O.; Bryns Patentkontor A/S, Postboks 9566, Egertorget, N-Oslo 1 (NO).

(81) Designated States: AT, AT (European patent), AU, BR, CF (OAPI patent), CG (OAPI patent), CH, CH (European patent), CM (OAPI patent), DE, DE (European patent), FI, FR (European patent), GA (OAPI patent), GB, GB (European patent), JP, SE, SE (European patent), SN (OAPI patent), SU, TD (OAPI patent), TG (OAPI patent), US.

Published
With international search report.
In English translation (filed in Norwegian).

(54) Title: ASSEMBLY ON A TERRAIN-TRAVELLING MOTOR VEHICLE

(57) Abstract

A terrain-travelling motor vehicle (1) has twin caterpillar tracks and bogie assemblies (2) pivotally attached to the frame (3) of the vehicle, comprising a rear pair of drive wheels (5) mounted on the frame (3) of the vehicle and a pair of front wheels (7) each of which is supported on a pivotable belt-tensioning arm (9) disposed on the forward end of a bogie arm (8) found on each bogie assembly (2), the rearward end of said arm (8) being supported by means of shaft journals (4) proximate to and in front of the center axis of the pair of rear wheels (5). The bogie arms (8) are movable in the vertical plane by means of hydraulic pressure cylinders (6) controllable from the cab of the vehicle for upward and downward pivoting of the bogie assemblies simultaneously or independently of each other, and for tautning the bogie tracks. The belt-tensioning arms (9) are movable independently of the bogie arms (8) by means of respective hydraulic pressure cylinders (10) which are pressurized at a desired adjustable pressure for maintaining a desired tautness in the belt during the pivoting movementof the bogie arm (8), as well as during the continual changes in the configuration of the lower perimeter of the belt which arise as the track passes over irregular ground terrain.

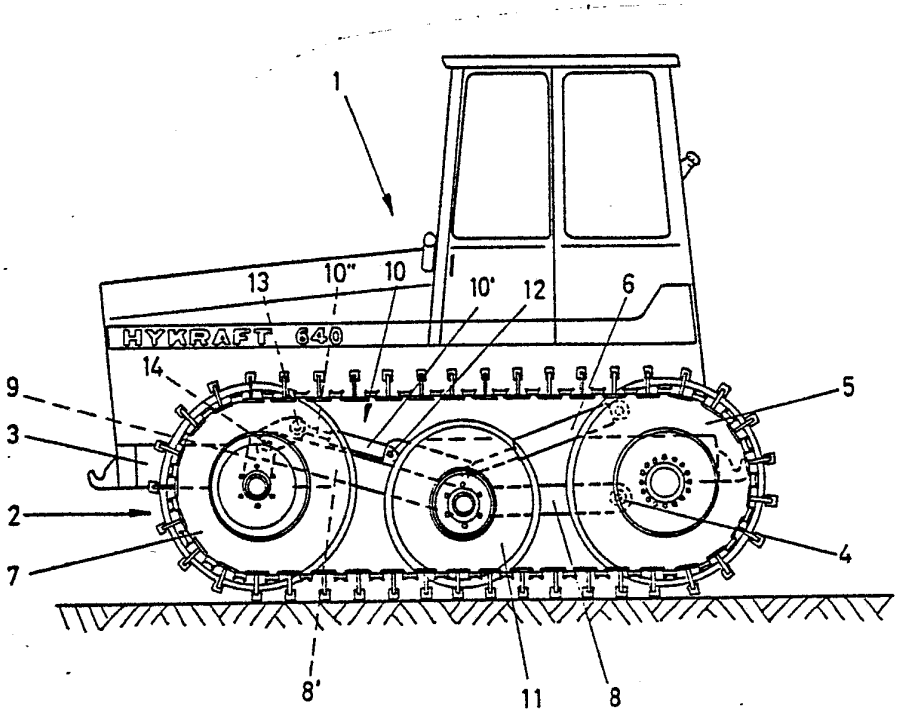

FOR THE PURPOSES OF INFORMATION ONLY

Codes used to identify States party to the PCT on the front pages of pamphlets publishing international applications under the PCT.

AT	Austria	**KP**	Democratic People's Republic of Korea
AU	Australia	**LI**	Liechtenstein
BE	Belgium	**LK**	Sri Lanka
BR	Brazil	**LU**	Luxembourg
CF	Central African Republic	**MC**	Monaco
CG	Congo	**MG**	Madagascar
CH	Switzerland	**MW**	Malawi
CM	Cameroon	**NL**	Netherlands
DE	Germany, Federal Republic of	**NO**	Norway
DK	Denmark	**RO**	Romania
FI	Finland	**SE**	Sweden
FR	France	**SN**	Senegal
GA	Gabon	**SU**	Soviet Union
GB	United Kingdom	**TD**	Chad
HU	Hungary	**TG**	Togo
JP	Japan	**US**	United States of America

ASSEMBLY ON A TERRAIN-TRAVELLING MOTOR VEHICLE.

The present invention relates to an assembly on a terrain-traveling motor vehicle having twin caterpillar tracks and bogie assemblies pivotally attached to the frame of the vehicle, as recited in the preamble of the appurtenant claim 1.

A terrain-traveling motor vehicle of this type is known from Swedish Patent 184,059, which shows a vehicle with a pair of bogie assemblies, usually known as half-tracks, wherein the rear wheels are supported on the frame of the vehicle and the bogie arm for the bogie assembly is supported in front of and somewhat below the central axis of the rear wheels. The front wheel of the bogie assembly is supported on a belt-tensioning arm rotatably mounted on the forward end of the bogie arm. Each bogie assembly is provided with a hydraulic pressure cylinder, which is connected to said belt-tensioning arm and to the frame of the vehicle. When this pressure cylinder is pressurized and extended, the belt-tensioning arm is pivoted, whereby the belt is tautened about the front and rear wheels of the bogie assembly, and upon further extension of the pressure cylinder the bogie assembly is pivoted downwardly.

A drawback of the above arrangement is that it is not possible to maintain a certain desired tautness in the belt if at the same time as the bogie assembly, by means of the pressure cylinder acting upon the bogie arm, is pivoted up and down, the forward portion of the vehicle, which is provided with front wheels, is simultaneously raised by the front wheels lifting up from the ground. In such circumstances, the tautness of the belt is completely dependent upon the force that is needed to lift the forward part of the vehicle up from the ground, so that the degree of tautness may be greater than desired. In normal driving, on the other hand, where the bogies operate as half-tracks and the front wheels rest on the ground, it is possible by means of the pressure cylinder to maintain a desired track tautness, but it is not possible to pivot the bogie downwardly and thereby raise the vehicle without increasing the track tautness.

The object of the present invention is to provide a terrain-traveling vehicle in which the body of the vehicle,

BUREAU OMPI WIPO INTERNATIONAL

and optionally the bogie arms independently of each other, may be raised and lowered for maintaining a desired position of the vehicle body as the vehicle traverses irregular ground surfaces, without this affecting the tautness of the belt.

This object is achieved in accordance with the present invention by means of the characterizing features disclosed in the characterizing clause of the appurtenant claim 1. By means of the second pressure cylinder recited therein, which acts upon the belt-tensioning arm, a certain desired track tautness can be maintained by causing this pressure cylinder to be pressurized at a desired determined pressure. The track tautness can at all times be decreased or increased by regulating said pressure, independently of the ground surface conditions and independently of the up-and-down pivoting movements of the bogie assembly effected by means of the first pressure cylinder.

An embodiment example of a terrain-traveling motor vehicle in accordance with the invention will be described in greater detail in the following with reference to the accompanying drawings, wherein

Figures 1 and 2, respectively, show the motor vehicle as seen from the side and from the top.

The terrain-traveling motor vehicle 1 is provided with twin caterpillar tracks and bogie assemblies 2, wherein the rear wheel 5 of each bogie assembly is supported in the frame of the vehicle 1 and the front wheel 7 of each assembly is supported on a respective pivotable arm 9 provided at the forward end of the bogie arm 8 found on each bogie assembly, the rearward end of said arm 8 being supported by means of shaft journals 4 proximate to and in front of the center of the rear wheels 5. The arm 9 is movable by means of a pressure cylinder 10 which is pressurized at a desired, adjustable pressure for maintaining a desired tautness in the bogie track during the pivoting movement of the bogie arm 8, as well as during the continual changes in the lower perimeter of the track as the vehicle drives over uneven terrain. The bogie assemblies 2 are independently and/or mutually pivotable and adjustable in relation to each other in the vertical plane by means of pressure cylinders 6 which are controlled from the cab

BUREAU OMPI WIPO INTERNATIONAL

of the vehicle. Approximately midway between the front and rear wheels 7,5, a track support wheel 11 is supported on the bogie arm 8, said wheel 11 preferably having a smaller diameter than the front and rear wheels 7,5 and resting against the lower perimeter of the belt. This means that when the bogie assemblies are in the normal position shown in Figure 1, the lower perimeters of all of the wheels will rest against a level surface, i.e., the front and rear wheels 7,5 and the belt-supporting wheel 11 in each bogie assembly have a common tangent. Since the bogie arm 8 is eccentrically supported at 4 in relation to the central axis of the rear wheel 5, i.e., in front of and somewhat below said center axis, the bogie track will slacken when the bogie arm 8 is pivoted upwardly by means of the pressure cylinder 6. The slack is taken up by the belt-tensioning arm 9 which pivots the front wheel 7 forwardly, owing to the fact that the pressure cylinder 10 is pressurized at a desired pressure in a manner known per se; in this manner, the pressure cylinder 10 which is connected to the extension of the belt-tensioning arm 9 maintains the desired tautness in the track whether the belt slackens as the bogie arm 8 is pivoted upwardly or tautens as the bogie arm 8 pivots downwardly, or as the lower perimeter of the track is subjected to changes in configuration as the track passes over irregularities such as roots and rocks in the ground terrain.

The front and rear wheels 7 and 5 preferably have the same diameter, so that the vehicle, in reasonably even terrain, moves equally well forward or backwards. If the vehicle is driving over very rough terrain, the bogie assemblies can be pivoted upwardly and downwardly independently of each other, and thereby compensate for any disparity in level when traversing sloping terrain so that the frame and cab of the vehicle are maintained approximately level, and the bogie assemblies can also be raised and lowered as required for passing over small hills or depressions in the ground on one side or the other of the vehicle, as known per se.

In the practical configuration of the bogie arm 8 which is shown in Figure 1, the arm is supported at 4 in the frame 3 of the vehicle at a height above the ground corresponding

BUREAU OMPI WIPO INTERNATIONAL

to the diameter of the belt-tensioning wheel 11, whereby the rearward part of the bogie arm 8 is parallel with the ground surface in the normal driving position of the bogie assemblies shown in Figure 1. From the middle portion of the arm, where the belt-tensioning wheel is mounted, the bogie arm 8 extends on an upward incline to a height above the ground approximately corresponding to the sum of the diameter of the front wheel 7 and the length of the belt-tensioning arm 9, which extends approximately straight down from its support 14 at the forward end of the bogie arm 8.

The drive member or pressure cylinder 10 for pivoting the belt-tensioning arm 9 so as thereby to maintain the desired tautness of the belt consists of a hydraulic cylinder 10' with piston 10" arranged on the top side of the bogie arm 8, the end of the cylinder 10' being supported at 12 on the forward part 8' of the bogie arm, and the piston/piston rod 10" being supported at 13 on an extension of the belt-tensioning arm 9 which extends upwardly from the arm support 14 on the bogie arm 8.

BUREAU OMPI WIPO INTERNATIONAL

Patent Claims

1. An assembly on a terrain-traveling motor vehicle (1) having twin caterpillar tracks and bogie assemblies (2) pivotally attached to the frame (3) of the vehicle and comprising a rear pair of drive wheels (5) mounted on the frame (3) of the vehicle, and a front pair of wheels (7) wherein each said wheel is supported on a pivotable belt-tensioning arm (9) at the forward end of a bogie arm (8) for each bogie assembly (2), the rearward end of said arm (8) being supported by means of shaft journals (4) proximate to and in front of the center axis of the rear pair of wheels (5), the belt-tensioning arms (9) and bogie arms (8) being movable in the vertical plane by means of hydraulic pressure cylinders (6) controllable from the cab of the vehicle, for pivoting the bogie assemblies upwardly and downwardly simultaneously or independently of each other and for tautening the bogie tracks, characterized in that the belt-tensioning arms (9) are movable independently of the bogie arms (8) by means of respective hydraulic pressure cylinders (10) which are pressurized at a desired adjustable pressure for maintaining a desired tautness in the belt during the pivoting movement of the bogie arm (8), as well as during the continual changes in configuration of the lower perimeter of the track which occur as the vehicle drives over irregular ground terrain.

2. An assembly according to claim 1, characterized in that the pressure cylinder (10) is disposed on the top side of the bogie arm with one thereof supported (at 12) on the forward part (8') of the bogie arm, and the other end thereof supported (at 13) on an extension of the belt-tensioning arm (9) which extends upwardly from the support (14) of said arm on the bogie arm (8).

BUREAU OMPI WIPO INTERNATIONAL

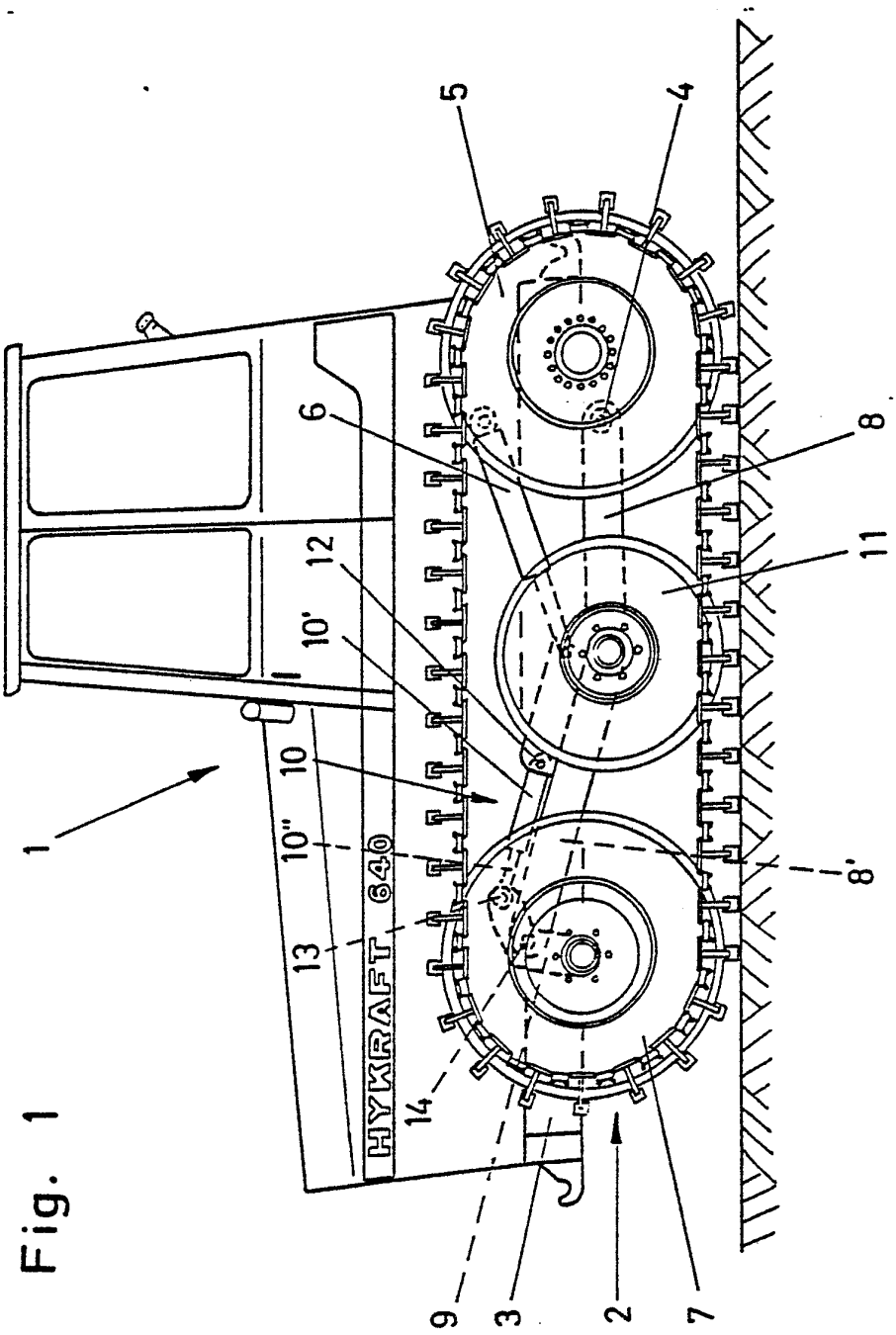

Fig. 1

BUREAU OMPI WIPO INTERNATIONAL

2/2

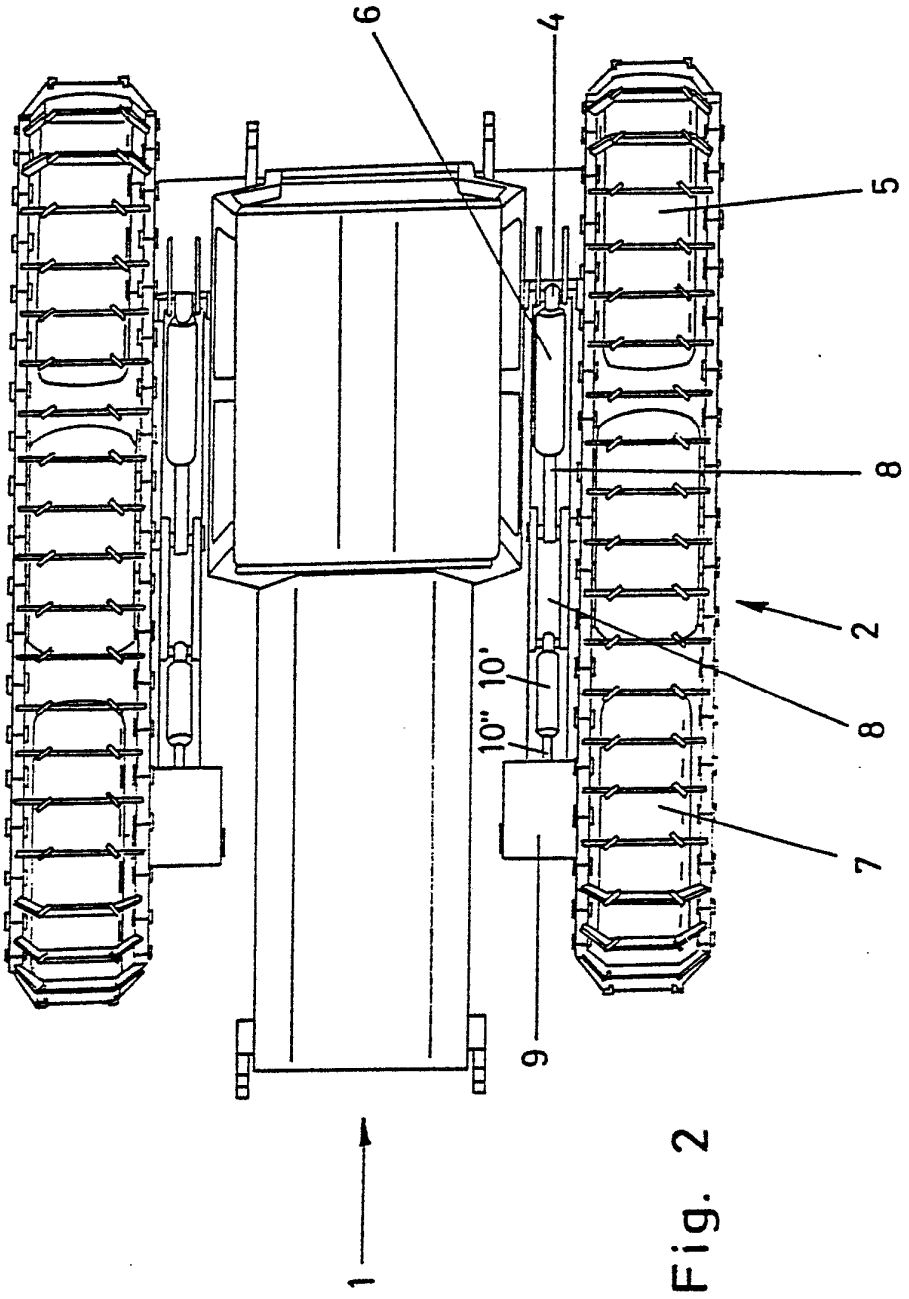

Fig. 2

BUREAU OMPI WIPO INTERNATIONAL

INTERNATIONAL SEARCH REPORT

International Application No PCT/NO82/00026

I. CLASSIFICATION OF SUBJECT MATTER (if several classification symbols apply, indicate all) [3]

According to International Patent Classification (IPC) or to both National Classification and IPC [3]

B 62 D 55/30

II. FIELDS SEARCHED

Minimum Documentation Searched [4]

Classification System	Classification Symbols
IPC 3	B 62 D 55/00,55/12,55/16,55/30
National Cl	63c:30
US Cl	305:10,22,25,27,29,30,31,32; 180:9,9.2,9.5,9.54,9.62,9.64 ../...

Documentation Searched other than Minimum Documentation to the Extent that such Documents are Included in the Fields Searched [5]

SE, NO, DK, FI classes as above

III. DOCUMENTS CONSIDERED TO BE RELEVANT [14]

Category.*	Citation of Document, [16] with indication, where appropriate, of the relevant passages [17]	Relevant to Claim No. [18]
X	US, A, 2 719 062 (B F ARPS) 27 September 1955	1,2
A	SE, C, 189 170 (A SVEDLUND) 28 April 1964	
A	SE, C, 222 817 (J PERSSON ET AL) 24 September 1968	
A	SE, C, 199 790 (TONSBERG HARPUNFABRIK) 16 November 1965	
A	NO, C, 91 725 (TONSBERG HARPUNFABRIK A/S) 19 May 1958	
A	NO, C, 89 130 (MASSEY-HARRIS-FERGUSON LIMITED) 23 April 1957	
A	US, A, 2 315 421 (J G HEASLET) 30 March 1943	
A	US, A, 3 289 779 (J E FEYCHT) 6 December 1966	
A	US, A, 2 654 639 (J A BOMBARDIER) 6 October 1953	
A	US, A, 2 613 116 (H V TUTTON) 7 October 1952	

* Special categories of cited documents: [15]

"A" document defining the general state of the art which is not considered to be of particular relevance

"E" earlier document but published on or after the international filing date

"L" document which may throw doubts on priority claim(s) or which is cited to establish the publication date of another citation or other special reason (as specified)

"O" document referring to an oral disclosure, use, exhibition or other means

"P" document published prior to the international filing date but later than the priority date claimed

"T" later document published after the international filing date or priority date and not in conflict with the application but cited to understand the principle or theory underlying the invention

"X" document of particular relevance; the claimed invention cannot be considered novel or cannot be considered to involve an inventive step

"Y" document of particular relevance; the claimed invention cannot be considered to involve an inventive step when the document is combined with one or more other such documents, such combination being obvious to a person skilled in the art.

"&" document member of the same patent family

IV. CERTIFICATION

Date of the Actual Completion of the International Search [2]	Date of Mailing of this International Search Report [2]
1982-07-13	1982 -07- 19
International Searching Authority [1]	Signature of Authorized Officer [20]
Swedish Patent Office	Allan Westrin Allan Westrin

Form PCT/ISA/210 (second sheet) (October 1981)

BAD ORIGINAL

12

International Application No. PCT/US82/00026

FURTHER INFORMATION CONTINUED FROM THE SECOND SHEET

II Fields Searched (cont)

US Cl 280:6, 6.11

V. ☐ OBSERVATIONS WHERE CERTAIN CLAIMS WERE FOUND UNSEARCHABLE [10]

This international search report has not been established in respect of certain claims under Article 17(2) (a) for the following reasons:

1. ☐ Claim numbers ... because they relate to subject matter [12] not required to be searched by this Authority, namely:

2. ☐ Claim numbers ....., because they relate to parts of the international application that do not comply with the prescribed requirements to such an extent that no meaningful international search can be carried out [13], specifically:

VI. ☐ OBSERVATIONS WHERE UNITY OF INVENTION IS LACKING [11]

This International Searching Authority found multiple inventions in this international application as follows:

1. ☐ As all required additional search fees were timely paid by the applicant, this international search report covers all searchable claims of the international application.

2. ☐ As only some of the required additional search fees were timely paid by the applicant, this international search report covers only those claims of the international application for which fees were paid, specifically claims:

3. ☐ No required additional search fees were timely paid by the applicant Consequently, this international search report is restricted to the invention first mentioned in the claims; it is covered by claim numbers:

4. ☐ As all searchable claims could be searched without effort justifying an additional fee, the International Searching Authority did not invite payment of any additional fee.

Remark on Protest

☐ The additional search fees were accompanied by applicant's protest.

☐ No protest accompanied the payment of additional search fees.

BAD ORIGINAL