(No Model.)

2 Sheets—Sheet 1.

B. J. WOLFE.

WINDOW SCREEN.

No. 522,642.

Patented July 10, 1894.

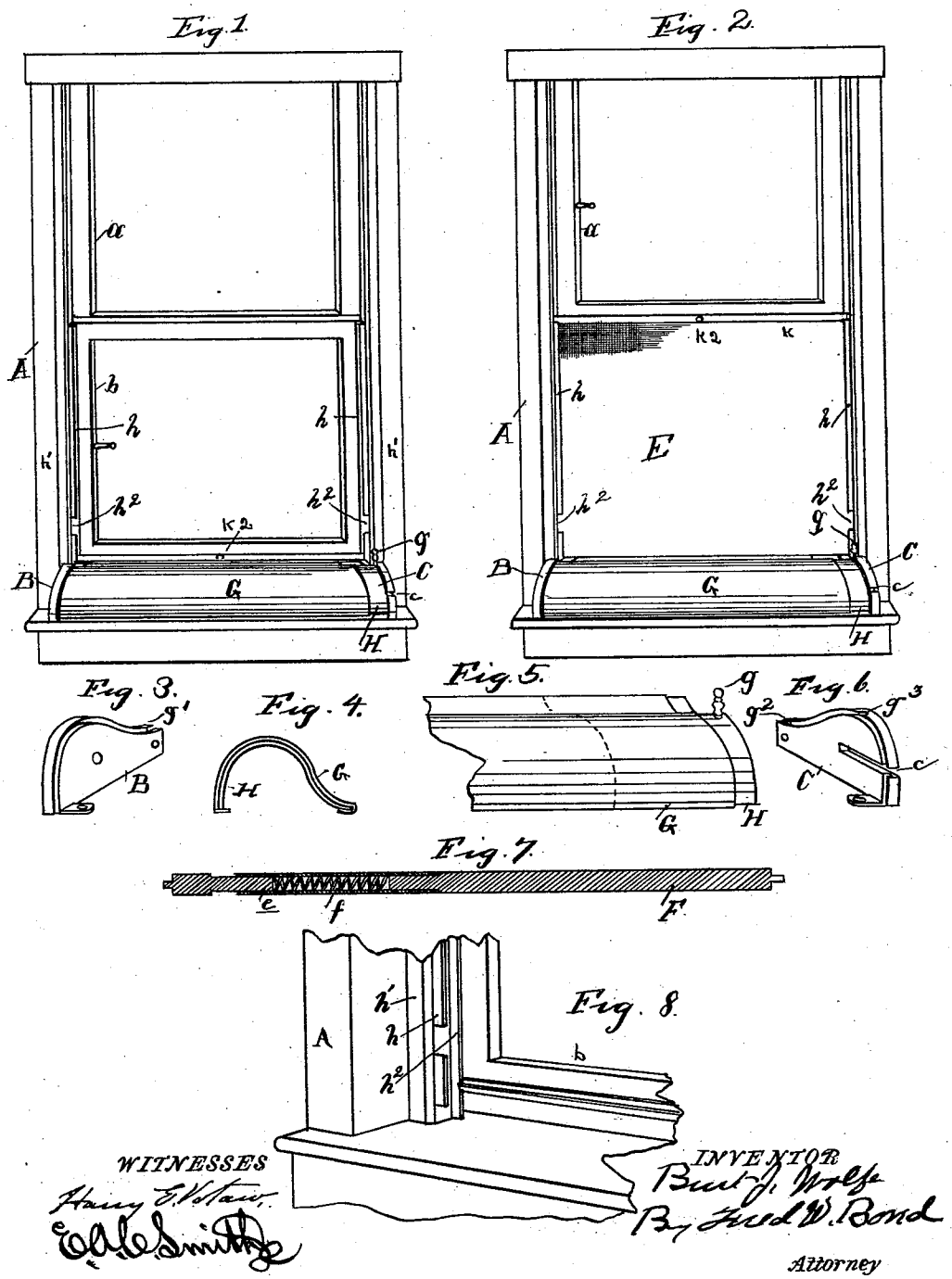

WITNESSES

Harry E. Votaw.

E. A. C. Smith

INVENTOR

Burt J. Wolfe

By Fred W. Bond

Attorney

THE NORRIS PETERS CO., PHOTO-LITHO., WASHINGTON, D. C.

(No Model.) 2 Sheets—Sheet 2.

B. J. WOLFE.

WINDOW SCREEN.

No. 522,642. Patented July 10, 1894.

Fig. 10.

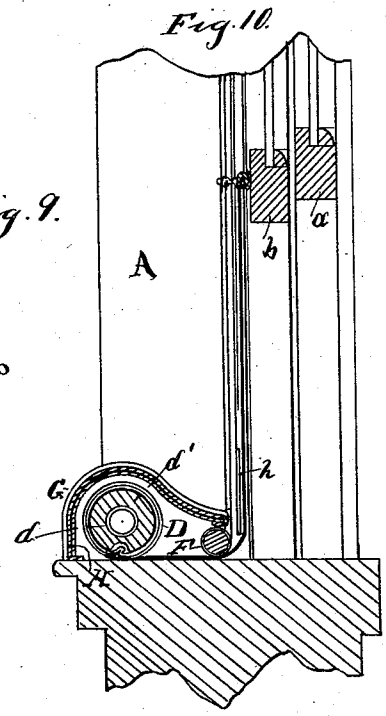

Fig. 11.

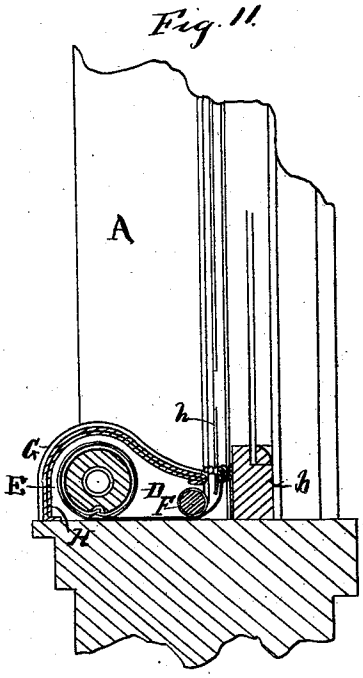

Fig. 9.

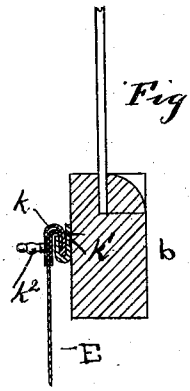

Fig. 12.

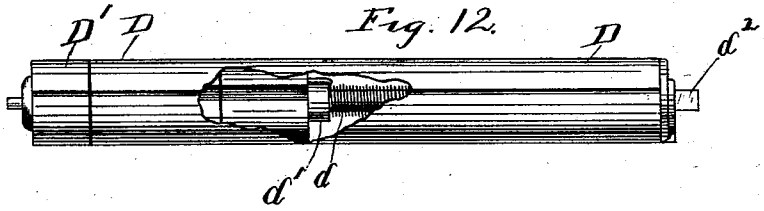

WITNESSES

Harry E. Watson

E. L. Smith

INVENTOR

Burt J. Wolfe

By Fred W. Bond

Attorney

THE NORRIS PETERS CO., PHOTO-LITHO., WASHINGTON, D. C.

UNITED STATES PATENT OFFICE.

BURT J. WOLFE, OF CANTON, OHIO, ASSIGNOR OF ONE-HALF TO JOHN R. REED, OF SAME PLACE.

WINDOW-SCREEN.

SPECIFICATION forming part of Letters Patent No. 522,642, dated July 10, 1894.

Application filed March 6, 1894. Serial No. 502,524. (No model.)

To all whom it may concern:

Be it known that I, BURT J. WOLFE, a citizen of the United States, residing at Canton, in the county of Stark and State of Ohio, have invented certain new and useful Improvements in Window-Screens; and I do hereby declare that the following is a full, clear, and exact description of the same, reference being had to the annexed drawings, making a part of this specification, and to the letters of reference marked thereon, in which—

Figure 1, is a side elevation, showing the window closed. Fig. 2, is a side elevation, showing the lower sash elevated and the screen in position to properly screen the window. Fig. 3, is a view of the roller bracket, designed and calculated for journaling both rollers. Fig. 4, is an end view of the cap. Fig. 5, is a view, showing a portion of the roller and screen cover. Fig. 6, is a view of the roller bracket, designed and calculated for holding the screen roller spring-bar against rotation. Fig. 7, is a detached view of the adjustable distributing roller, showing parts in section. Fig. 8, is a view showing a portion of a window frame, and sash, illustrating a portion of one of the screen guides. Fig. 9, is an enlarged view of the bottom sash-bar, showing the screen holding bars, placed in proper position to connect the top or upper end of the screen. Fig. 10, is a transverse section of the window sashes, showing the lower sash elevated and the screen exposed for use, also showing transverse section of the rollers. Fig. 11, is a transverse section, showing the lower sash brought down, and illustrating the screen concealed. Fig. 12, is a detached view of the screen roller, showing parts broken away, to illustrate the actuating spring.

The present invention has relation to window screens, and it consists in the different parts and combination of parts hereinafter described, and particularly pointed out in the claims.

Similar letters of reference indicate corresponding parts in all of the figures of the drawings.

In the accompanying drawings A, represents the window frame, which is constructed in the ordinary manner, and is provided with the ordinary window sashes *a* and *b*, which window sashes together with their glass are operated in the ordinary manner.

The roller brackets B and C, are attached to the bottom of the window frame, and are located on the top or upper side of the window ledge or shelf. To the brackets B and C, is attached the screen roller D, which screen roller is constructed in substantially the same manner as window curtain rollers, having an actuating spring located within the roller proper.

The bracket C, is provided with the slot *c*, which slot is formed open, as illustrated in Fig. 6, and is so formed for the purpose of providing a means for easily attaching and detaching the roller D, together with its screen.

The roller D is provided with the actuating spring *d*, which actuating spring is attached at one end to the block or head *d'*, and its opposite end attached to the bar d^2, and is so attached for the purpose of giving tension to the spring, as the gauze or netting E, is unwound from the roller D, thereby bringing the spring into proper condition to rotate the roller D, and wind the gauze or netting E as the sash *b* is lowered.

For the purpose of properly guiding and spreading the gauze or netting E, as it is wound and unwound upon and from the roller D, the guide roller F, is provided, which guide roller is journaled to the brackets B and C.

For the purpose of changing the length of the guide roller F, said roller is formed in sections, and the sections united together by means of the tube *e*.

For the purpose of preventing the guide roller F from becoming detached from its bearings, the spring *f*, is provided, and is located within the tube *e*, and so adjusted that the end of said spring will abut against the ends of the roller sections F. Another object and purpose of providing the spring *f*, and the tube *e*, is to provide a means for adjusting the length of the roller F, for different sized windows, or in other words, windows having different widths.

For the purpose of protecting the gauze or netting, and the different rollers, the cap or covering G, is provided, which cap or covering is preferably formed of polished sheet metal.

For the purpose of adjusting the length of

the cap or covering G, one end of said cap or covering is provided with the sliding extension H, which sliding extension is provided with the handle or pin g. The brackets B and C, are each provided with the grooves g' and g^2, which grooves are for the purpose of receiving and holding the cap or cover G, and the sliding extension H.

For the purpose of preventing the cap or cover G from becoming accidentally displaced, the upper flange of the groove g^2, is provided with the recess or notch g^3, which notch or recess receives the handle or pin g, substantially as shown in Figs. 1 and 2.

For the purpose of holding the gauze or netting in proper position during the time the sash is elevated, and at the same time closing the space, between the window strips and the edges of the gauze or netting, the grooved guides h are provided, and are located substantially as illustrated in Figs. 1, 2, 10, 11, and 8, and are securely attached to the strips h' or their equivalents. The grooved guides h, are preferably formed of sheet metal, and are bent or folded to form the groove.

For the purpose of providing a means for easily attaching and detaching the gauze or netting to and from the window sash, the top or upper end of the gauze or netting is provided with the hooked bar k, which hooked bar forms a proper binding for the raw end of the gauze. To the bottom or lower end of the lower sash, is attached the hooked bar k' which hooked bar receives and holds the bar k, substantially as illustrated in Fig. 9.

For the purpose of providing a means for easily removing the bar k, from the bar k', the handle k^2 is provided, which handle is attached to the bar k. When it is desired to detach the gauze or netting E, from the sash, the hooked bar k is lifted out of the hooked bar k', after which the gauze is wound upon the roller D independent of the movement of the sash.

For the purpose of providing a means for removing the hooked bar from the grooved guides h, said grooved guides are provided with the notches h^2.

It will be understood that by my peculiar arrangement, I am enabled to easily detach the gauze or netting from the window sash, after which said sash is free to be operated without operating the gauze or netting.

Another advantage in removably attaching the gauze or netting to the sash, is to provide for elevating the lower sash independent of the gauze so as to easily operate shutters that may be located upon the outside of the window.

I have shown my invention as applied to the lower sash, but it will be understood that it may be applied to the top or upper end of the window frame, and to the upper sash, without departing from the nature of my invention.

For the purpose of providing the proper adjustment for the roller D, its journaled end may be provided with the sliding tube D'.

It will be understood that the gauze or netting E, may be formed of cloth or wire as desired.

Having fully described my invention, what I claim as new, and desire to secure by Letters Patent, is—

The combination of a window frame, the brackets B and C, the bracket C provided with the slot c, the roller D, journaled to the brackets and provided with the block or head d', and the actuating spring d, the guide roller F, formed in sections, and provided with the spring f, the cap or cover G provided with the sliding extensions H, having the handle or pin g, the grooves g' and g^2, formed in the brackets B and C, the gauze or netting fixed to the roller D, and removably attached to the window sash, the grooved guides h, provided with the notches h^2, and the bars k and k', substantially as and for the purpose set forth.

In testimony that I claim the above I have hereunto subscribed my name in the presence of two witnesses.

BURT J. WOLFE.

Witnesses:
F. W. BOND,
E. A. C. SMITH.