Oct. 2, 1951 W. J. GEWINNER 2,569,664

COMBINED MECHANICAL AND PNEUMATIC GOVERNOR

Filed Nov. 5, 1947 2 Sheets-Sheet 1

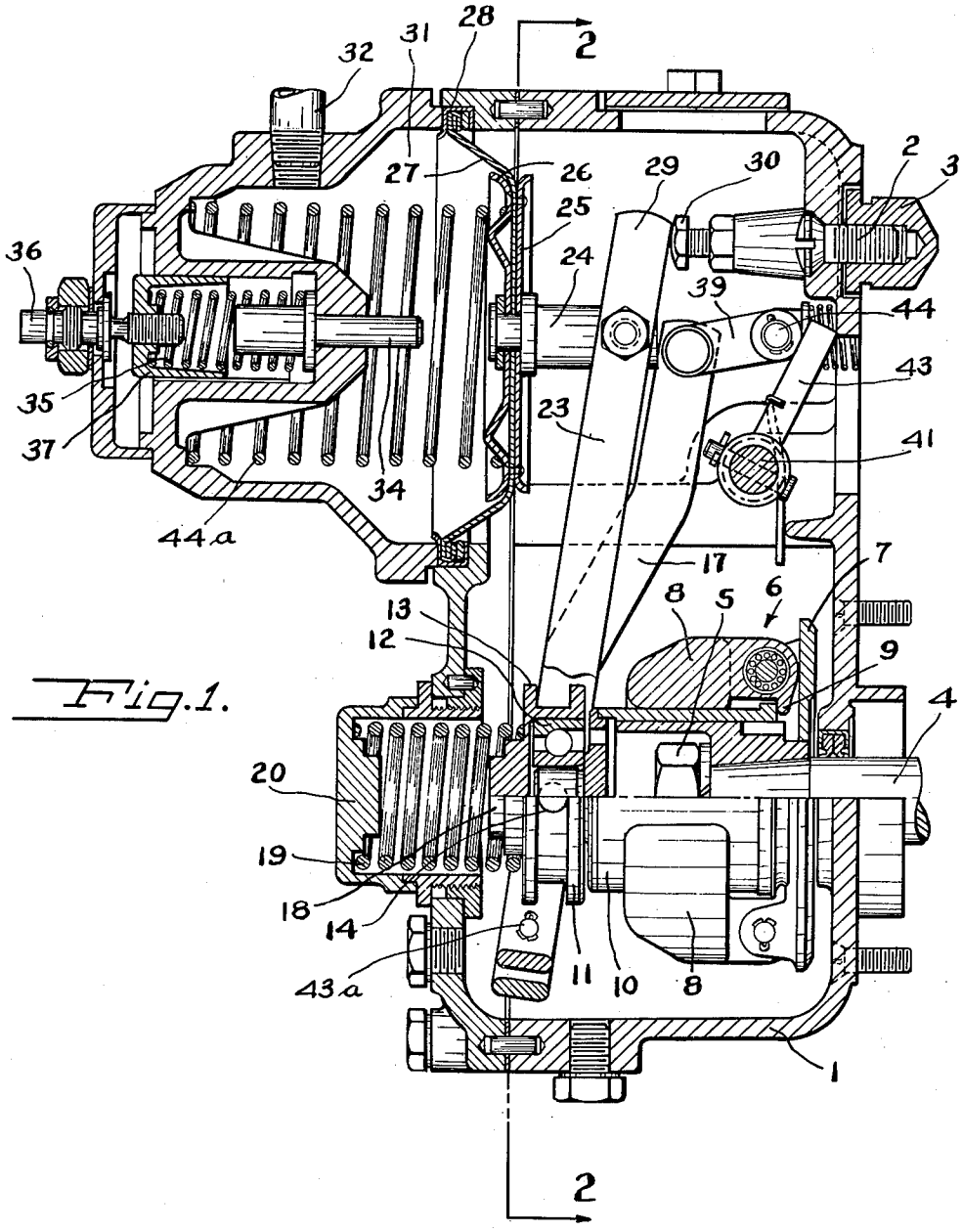


Fig. 1.

INVENTOR.
WALTER J. GEWINNER

BY Raymond A. Paquin
ATTORNEY.

Oct. 2, 1951 W. J. GEWINNER 2,569,664

COMBINED MECHANICAL AND PNEUMATIC GOVERNOR

Filed Nov. 5, 1947 2 Sheets-Sheet 2

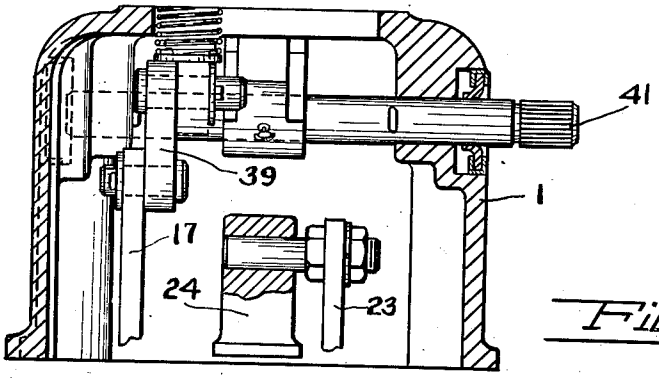


Fig. 3.

Fig. 2.

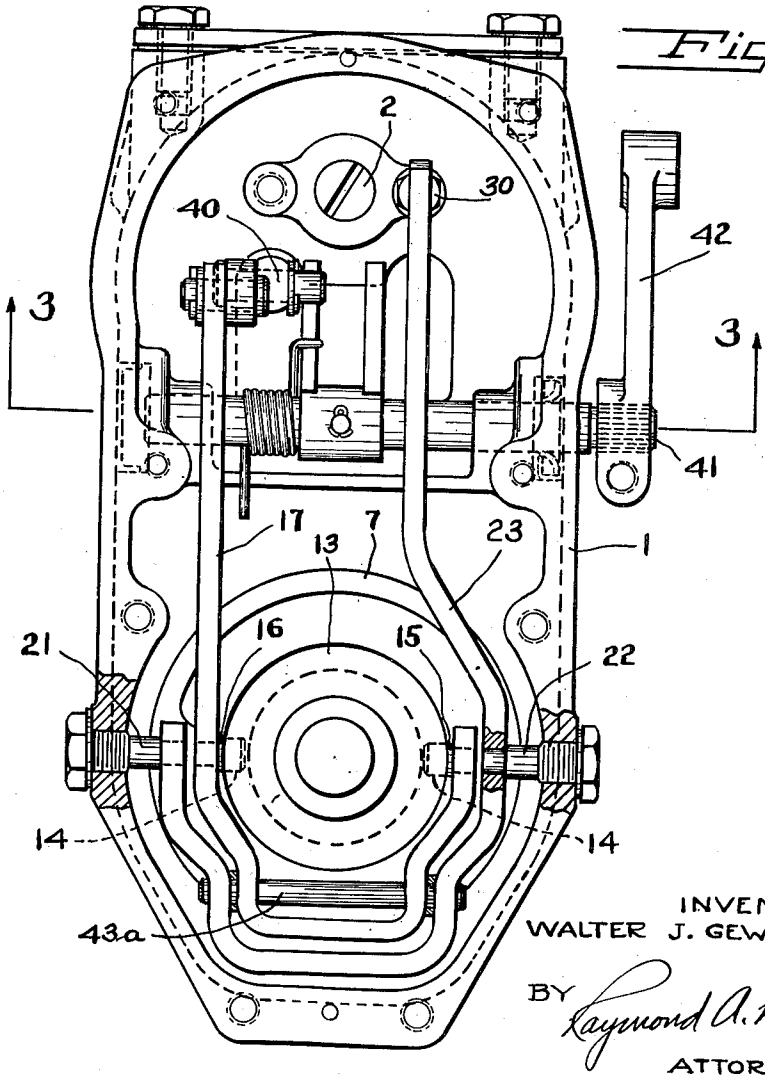


INVENTOR.
WALTER J. GEWINNER
BY Raymond A. Paquin
ATTORNEY.

Patented Oct. 2, 1951 2,569,664

# UNITED STATES PATENT OFFICE

2,569,664

## COMBINED MECHANICAL AND PNEUMATIC GOVERNOR

Walter J. Gewinner, Springfield, Mass., assignor to American Bosch Corporation, Springfield, Mass., a corporation of New York

Application November 5, 1947, Serial No. 784,271

2 Claims. (Cl. 123—140)

1

This invention relates to governors and more particularly to a minimum and maximum speed controlling governor adapted to be associated with the fuel injection pump to control the supply of fuel to the engine and thereby control the speed of operation of the engine at a pre-determined speed from idling or minimum speed to full load or maximum speed of the engine.

The principal object of the invention is to provide a combined mechanical and pneumatic governor adapted to provide relatively close speed governing or regulation over the entire range.

Another object of the invention is to provide a governor of the type set forth which is relatively economical and simple in construction and yet which is efficient over a substantially wide range.

Another object of the invention is to provide a governor of the type set forth wherein the pneumatically operated governing means is employed at low and intermediate speeds and wherein the pneumatically operated governor is overridden by a mechanical type governor at high speeds to provide closer regulation.

Another object of the invention is to provide a governor of the type set forth having a pneumatically operated unit controlled by the butterfly valve in the engine induction system and a mechanical unit controlled by centrifugal force of the speed of the engine on flyweights on the fuel injection pump camshaft.

Other objects and advantages of the invention will be apparent from the following description taken in connection with the accompanying drawings. I do not wish to be limited to the exact details of construction and arrangement of parts shown and described, as the preferred form has been given by way of illustration only.

Referring to the drawings:

Fig. 1 is a sectional view of a governor constructed according to the invention;

Fig. 2 is a view taken along line 2—2 of Fig. 1 looking in the direction of the arrows; and

Fig. 3 is a sectional view taken along line 3—3 of Fig. 2 looking in the direction of the arrows.

Referring more particularly to the drawings wherein similar reference characters designate corresponding parts throughout the several views, the device shown embodying the invention comprises a housing 1 adapted to contain the governor mechanism and adapted to be connected to the fuel injection pump for use on the engine by means of the screw 2 which engages the screw plug 3 on the fuel injection pump to thereby retain the governor in position thereon in addition to fastening screws.

2

The pump camshaft 4 extends into the housing 1 and the mechanical governing means is secured thereon by means of the nut 5 which retains the mechanical centrifugal governing means 6 on the camshaft 4.

The mechanical governing means comprises the spider 7 on which are pivotally mounted the governor weights 8 having the ends 9 adapted to engage the adjacent end of the sliding cup member 10, which cup member has the integral extension 11 on which is mounted the ball bearing 12 around which is positioned the collar member 13 having oppositely disposed openings 14 adapted to receive the pivots 15 and 16 for pivotally supporting the lever 17. The member 13 also has the spring seat portion 18 adapted to engage the coil spring 19 which has its opposite end engaging the spring retaining cap 20. The spring 19 is selected for the speed at which it is desired to have the governor operated.

The housing also has oppositely disposed openings through which extend the pivot members 21 and 22 which extend into openings in the lever 23 to pivotally support said lever. The pivots 21 and 22 each have a threaded portion adapted to engage a threaded portion in the wall of the housing 1 whereby said pivot members are locked in position in said wall with their free ends extending into the housing and adapted to serve as pivot supports for the lever 23 as previously described.

The lever 23 is secured adjacent its upper end to the pin 24 which is secured to the supporting plates 25 and 26 between which is positioned the diaphragm 27 which has its outer extremities 28 secured between adjacent flanges in the portion of the housing. The lever 23 adjacent its upper extremity has the portion 29 engaging the adjustable full load stop screw 30.

The pneumatic control diaphragm chamber 31 is connected by the pipe line 32 to the butterfly valve in the induction system of the engine whereby said pneumatic governing means is adapted to be actuated by the suction in said induction system of the engine caused by the adjusting of the butterfly valve which, in turn, is adjusted by the adjustment of the throttle for the engine.

The bumper pin 34 is held in position by the coil spring 35, which spring is adjustable by the adjustment of the screw 36 and cap 37 and said pin 34 is the bumper pin for adjusting the idling speed of the engine and said pin 34 is adapted to limit the movement of the diaphragm 27 and thus adjust the idling speed of the engine.

As will be seen from the drawings, the lever 23 is secured to the member 24 which member

is adapted to engage the end of the lever 17 when said lever is beyond the full load stop position and the lever 17 is connected by the link 39 to the control rack 40 which is connected to the adjustment for the fuel injection pumps.

On the shaft 41, which is adapted to be pivoted by the handle 42, is the stop lever 43 adapted to engage the projection 44 on the shaft 40 whereby the fuel supply may be shut off.

The ends of the levers 17 and 23, beneath the member 13 are secured together by the pin 43a whereby when the centrifugal weights 8 are actuated by the speed of the camshaft 4 and actuate the sliding cup 10, both levers 17 and 23 are simultaneously adjusted therewith and thus it will be seen that the mechanical governor serves to override or supplement the pneumatic governor at higher speeds to give closer regulation.

In operation the pneumatic governor is adapted to regulate the pump and thereby the engine at lower and intermediate speeds.

With the engine at rest in the pneumatic governor chamber both sides of the diaphragm 27 are at atmospheric pressure and the spring 44 pushes the diaphragm 27 to the extreme right and the control rack 39 is, therefore, in the full load delivery position. When the engine is running, however, pressure in the governor chamber 31 is reduced below the atmospheric pressure existing on the opposite side of the diaphragm because of suction caused by air passing the butterfly valve in the induction system of the engine, the amount of pressure reduction in chamber 31 depending on the position of the butterfly valve 33 and the speed of the engine, that is, the amount of suction created through the line 32 and this difference in the pressures on the opposite sides of the diaphragm 27 has a definite effect on the position of the diaphragm and consequently the control of the fuel from the pump to the engine.

If the engine speed increases, the pressure in the chamber 31 is lowered by the increased air velocity past the butterfly valve resulting in the creation of a vacuum in the connecting line. The diaphragm 27 then compresses spring 44a and moves the control rack 39 toward the stop position and the diaphragm continues to move until it has reached a position at which the depression of pressure in chamber 31 is balanced by the pressure exerted by spring 44a.

The opposite procedure takes place when the engine speed is decreased. The adjustment of this pneumatic governor is fully automatic at all speeds or at any position of the butterfly valve because each position of the butterfly valve represents a definite speed. The pneumatic governor thereby operates to regulate the engine through control of fuel from the pump at lower speeds such as idling speed and intermediate speeds.

When the speed reaches the point where the centrifugal weights 8 are actuated by the speed of rotation of the camshaft 4, the lever 17 is adjusted as previously described and in this case the mechanical governor overrides or supplements the pneumatic governor at these high speeds and thereby provides closer regulations at such speeds.

It is pointed out that by employing the present invention, a more economical and reasonably priced governor may be constructed which is satisfactory over the entire range than would be possible with the mechanical governor and also more accurate regulation is obtained than would be possible over the entire range with a pneumatic type governor.



From the foregoing it will be seen that I have provided simple, efficient and economical means for obtaining all of the objects and advantages of the invention.

Having described my invention, I claim:

1. In a combined pneumatic and mechanical governor for controlling a fuel injection pump having a control rack, said governor having a housing, a centrifugal governing element, a pneumatic governing element, a lever controlled by said centrifugal governing element and a lever controlled by said pneumatic governing element, said levers each having U-shaped end portions in adjacent relation, an adjustable collar, said U-shaped end portions each being pivotally mounted adjacent their opposite sides with the U-shaped portion of the lever controlled by said centrifugal governing element being pivotally connected to said adjustable collar and the U-shaped portion of the lever controlled by said pneumatic governing element being pivotally connected to said housing, and said U-shaped end portions being connected to each other, said lever which is controlled by said pneumatic governing element being connected adjacent its free end to said pneumatic governing element and the other of said levers being connected adjacent its free end to the pump control rack whereby when the pneumatic governing element is in operation, the control rack will be operated through both said levers and when the centrifugal governing element is in operation, the control rack will be operated directly through the lever connected thereto.

2. In a combined pneumatic and mechanical governor having separately operable centrifugal and pneumatic governing means for controlling a fuel injection pump having a control rack, a centrifugal governing arrangement, a pneumatic arrangement, a pair of entirely separate levers having adjacent U-shaped portions adjacent one end thereof, said levers having their U-shaped end portions connected together and said levers being mounted for pivotal movement about said U-shaped end portions, said lever which is connected to said centrifugal governing arrangement being connected to said centrifugal governing arrangement and adapted to be actuated thereby and having its free end connected to said control rack, the other of said levers being connected adjacent its free end to said pneumatic governing arrangement and being adapted to be actuated thereby, whereby when the pneumatic governor is in operation it operates said control rack through both of said levers and when the centrifugal governing member is in operation, it operates the control rack directly through the lever connected thereto and to the control rack.

WALTER J. GEWINNER.


## REFERENCES CITED

The following references are of record in the file of this patent:

UNITED STATES PATENTS

| Number | Name | Date |
|---|---|---|
| 1,790,443 | Ricardo | Jan. 27, 1931 |
| 2,229,048 | Colell | Jan. 21, 1941 |

FOREIGN PATENTS

| Number | Country | Date |
|---|---|---|
| 500,365 | Great Britain | Feb. 8, 1939 |
| 868,619 | France | Oct. 3, 1941 |