Dec. 28, 1965 R. L. COCHRAN 3,226,033

JET BOAT REVERSE MOVEMENT ARRANGEMENT

Filed Oct. 1, 1962 2 Sheets-Sheet 1

Fig. 1.

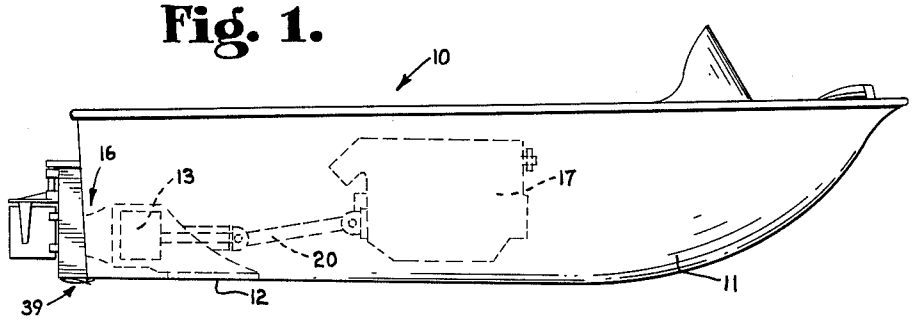

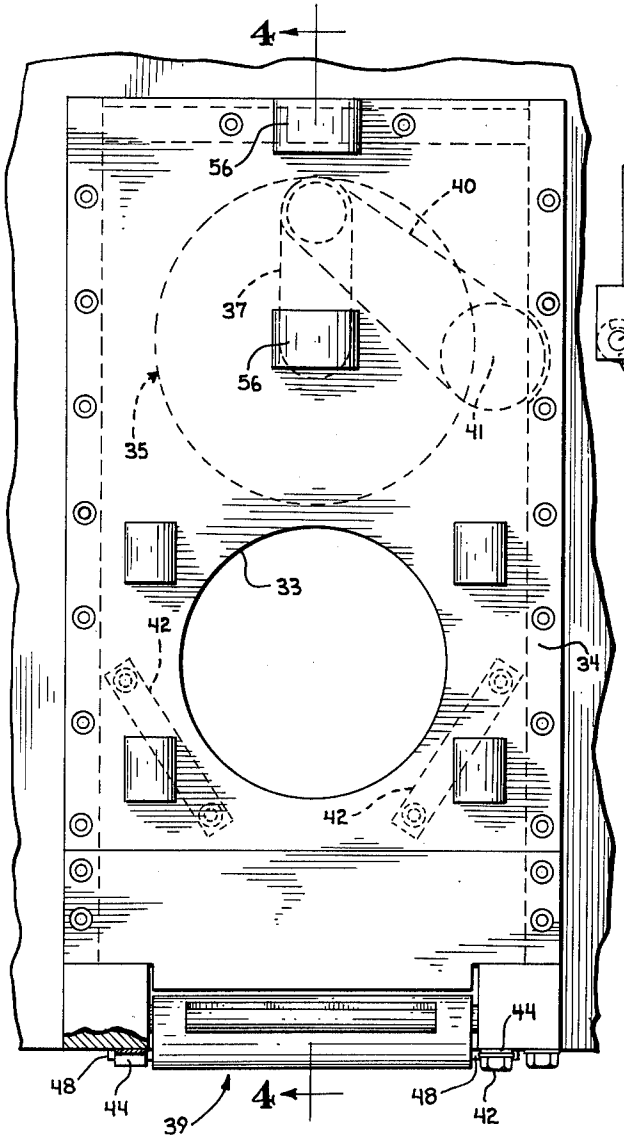

Fig. 2.

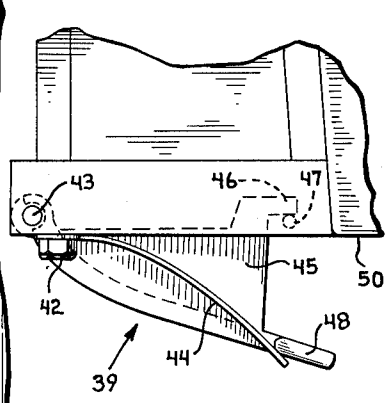

Fig. 3.

INVENTOR.
RICHARD L. COCHRAN
BY
Lockwood, Woodard, Smith & Weikart
Attorneys

Dec. 28, 1965 R. L. COCHRAN 3,226,033

JET BOAT REVERSE MOVEMENT ARRANGEMENT

Filed Oct. 1, 1962 2 Sheets-Sheet 2

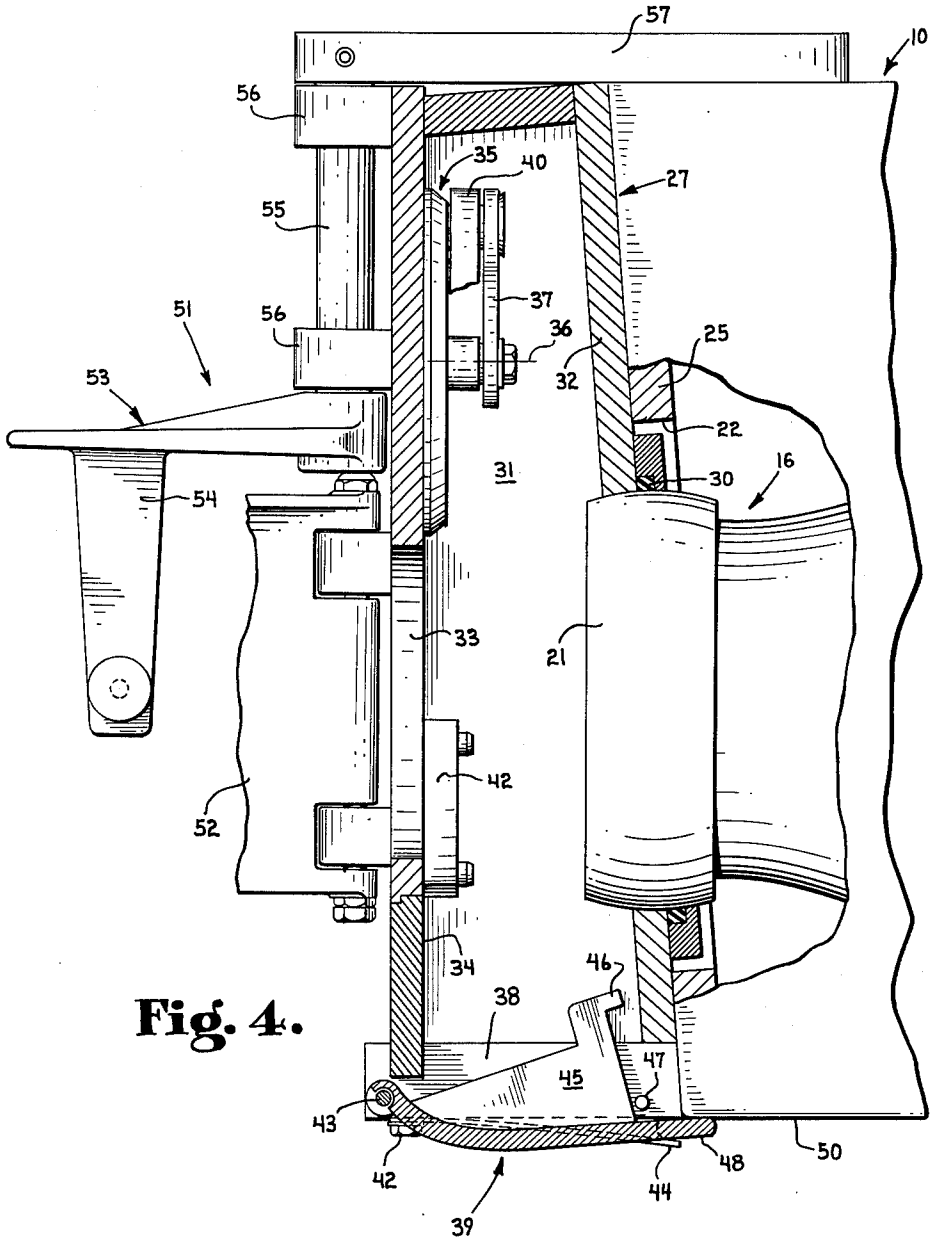

Fig. 4.

INVENTOR.
RICHARD L. COCHRAN
BY
Lockwood, Woodard, Smith & Wiskert
Attorneys

United States Patent Office 3,226,033 Patented Dec. 28, 1965

3,226,033

JET BOAT REVERSE MOVEMENT ARRANGEMENT

Richard L. Cochran, Indianapolis, Ind., assignor to The Buehler Corporation, Indianapolis, Ind., a corporation of Indiana

Filed Oct. 1, 1962, Ser. No. 227,249
6 Claims. (Cl. 239—265.27)

The present invention relates to jet propelled watercraft and more particularly to a means for controlling the direction of such craft.

One form of jet propelled boat incorporates an engine operatively connected to a pump located within a conduit extending through the boat from an intake opening at the bottom of the boat to an exhaust at the rear of the boat. Water is drawn into the conduit through the intake opening and is exhausted in a stream from the rear of the boat causing the boat to move forwardly. The direction of movement of the boat is controlled by deflecting the stream of water as it leaves the rear of the boat. For example, the stream could be deflected so as to cause the stream to flow beneath and forwardly of the boat causing the boat to move in reverse.

A primary object of the present invention is to provide in a jet boat improved means for controlling the direction of flow of the water as it leaves the boat and for controlling the direction of movement of the jet boat.

One manner in which the stream can be guided so as to move forwardly of and beneath the boat is by a fixed deflector as disclosed in an application for Letters Patent, Serial No. 164,481 of Howard P. Lerwick et al., Rolling Disc Type Gate assigned to the same assignee as the present application. In operation, normal rearward flow of the stream of water is cut off forcing the stream to exit at and be guided by the fixed deflector. In designing the fixed deflector, the conflicting considerations are first to make the deflector project sufficiently to guide the stream and second to make the deflector project as little as possible so that it does not create drag when the craft is moving forwardly.

Consequently, a further object of the invention is to provide a jet boat direction control incorporating deflecting means which operate to properly and thoroughly guide the stream beneath the craft for reverse movement but which does not produce drag when the craft is moving forwardly.

Still another object of the invention is to provide a jet boat direction control which includes the highly efficient and inexpensive rolling disc type gate of the above mentioned patent application and which incorporates the advantages of that gate yet which includes improved reverse movement means as a part of the combination.

Still a further object of the invention is to provide in a jet boat improved means for positioning the gate or valve which controls the jet flow from the boat.

Related objects and advantages will become apparent as the description proceeds.

One embodiment of the control system embodying the present invention includes a conduit mounted on a watercraft and having a first exit toward which the conduit extends. Means are provided for pumping water through the conduit toward the first exit for producing a jet therefrom. The conduit has a further exit opening in the sidewall thereof and when suitable valve means are used to shut off flow through the first exit, water issues from said further exit. A deflector is pivotally mounted on the conduit at the rearward edge of the further exit so as to cover said further exit. The deflector is pivotal between a first position wherein the distal portion of the deflector engages said conduit closing off said further exit and a second position wherein the deflector extends forwardly and downwardly from the conduit for guiding water beneath the craft. A spring is fixed with relation to the conduit and bears against the deflector so as to urge it toward the first position but yieldably permit it to assume the second position when the first exit is shut off.

The full nature of the invention will be understood from the accompanying drawings and the following description and claims:

FIG. 1 is a side elevation of a jet boat incorporating the novel direction control of the present invention.

FIG. 2 is an enlarged fragmentary rear elevation of the rearward portion of FIG. 1 with certain elements broken away and showing in detail the direction control of the present invention.

FIG. 3 is an enlarged fragmentary side elevation of a portion of the structure of FIG. 1 showing the apparatus in a different operating position than FIG. 1.

FIG. 4 is a vertical section taken along the line 4—4 of FIG. 2 in the direction of the arrows.

Referring now more particularly to the drawings, there is illustrated a jet boat **10** having a hull **11**, the hull being provided with an intake opening **12** communicating between the bottom of the boat and a pump **13**. The pump **13** has a passage therethrough communicating between the intake opening **12** and a passage through a tail pipe **16** secured to the rear of the boat. The pump **13** is driven by a conventional marine engine **17** by means of shaft **20** and functions to pump water from the intake **12** to and out of the rear of the boat. The water is constricted into a stream by the converging surface of an annular member (not shown) fixed within the exit end **21** of the tail pipe **16**.

The tail pipe **16** projects through a suitable aperture **22** in the transom **25** of the craft into a housing **27** which is fixedly mounted on the transom **25**. The housing **27** is sealed to the tail pipe by means of resilient ring **30** which prevents leakage of fluid from the hollow interior **31** of the housing between the housing wall **32** and the tail pipe **16**. As is perhaps best shown in FIG. 4, the tail pipe **16** is in registry with a circular opening **33** in the rearward wall **34** of the housing. Consequently, a jet stream formed by the tail pipe **16** will pass directly through the hollow interior **31** and through the opening **33** without an appreciable portion of the stream of water contacting the housing.

A circular shaped flat gate or plate **35** is rotatably mounted at its axis **36** to one end of a vertically extending arm **37**, the other end of which is rotatably secured to a further arm **40**. Stated in another way, gravity causes the arm **37** and the gate **35** to hang or depend from the arm **40** and causes the arm **37** to retain a generally vertical position above the opening **33** when the device is in the position of FIG. 2. When the gate is lowered, it may tend to swing to the right or left as viewed in FIG. 2 under the action of the water in the housing; however it will tend to return to a central position in the housing under the action of gravity. The arm **40** is pivoted about axis **41** to the craft **10**. A suitable shaft is fixedly secured to the arm **40** for rotation about the axis **41** and is also associated with a suitable lever within the craft **10** whereby the arm **40** can be rotated for raising and lowering the disc gate **35**.

The gate **35** can be lowered to cover the opening **33** and to prevent all flow therefrom by the water in the jet stream formed by the tail pipe **16**. When the gate **35** is lowered, it is guided by guide members **42** fixed in converging relation to the inside surface of the rearward wall **34** of the housing **27**.

When the gate is covering the opening **32**, the water exiting from the tail pipe **16** fills the interior **31** of the housing **27**. The only other exit to the housing **27** is an opening **38** at the lower end of the housing. This open-

ing is controlled by a deflector **39** which is pivoted about a rod **43** secured to the housing at the rear edge of the opening **38**. The deflector **39** is normally maintained in the upward position illustrated in FIG. 4 by means of a pair of leaf springs **44** which are fixed to the housing **27** at the rearward edge of the opening **38** by screws **42**. The springs **44** bear against sidewardly projecting portions **48** formed on the deflector **39**.

When the gate **35** is moved into covering relation with the opening **33**, the pressure of the water within the interior **31** forced the deflector **39** downwardly to the position of FIG. 3. Projecting upwardly from each transverse side of the deflector **39** is a guide member **45** having a forwardly projecting finger **46** thereon. When the deflector is in the position of FIG. 3, each finger **46** engages a respective stop element **47** secured to the housing preventing movement of the deflector past the position of FIG. 3. The guide elements **45** also function to define a channel for the stream of water, said channel leading forwardly beneath the watercraft **10**.

It will be noted that the bottom **50** of the watercraft is generally horizontal and extends up to and is adjacent to the opening **38**. When the deflector **39** is in the upward position of FIG. 3, it is generally flush with the horizontal bottom **50** of the boat and causes no appreciable drag in forward movement. However, when the deflector is in its downward position of FIG. 3, it extends well beneath the bottom **50** of the watercraft. This situation would be intolerable if the deflector **39** was retained in this position when the craft was moving forwardly. However, the deflector **39** is automatically moved by springs **44** to the position of FIG. 4 when the gate **35** is raised to the position of FIG. 4.

The control system is also provided with a conventional steering apparatus **51** incorporating a pair of deflectors **52** pivoted to the housing **27** on opposite sides of the opening **33**. When the watercraft is moving forwardly and a jet stream is issuing from the opening **33**, the deflectors **52** may be used to deflect this stream to steer the craft. Such deflection is accomplished by a steering element **53** having a pair of depending members **54** engaging the outer surfaces of the deflectors **52**. The steering element **53** is fixed to the lower end of a shaft **55** which is rotatably received within bearings **56**. The steering element **53** may be pivoted by a member **57** fixed to the upper end of the shaft **55**.

From the above description, it will be clear that the present invention provides an improved control system for a watercraft. It will be evident that the reverse movement arrangement of the present invention provides effective means for guiding the stream of water beneath the craft to cause it to move in reverse, yet that said guide means does not cause drag in forward movement.

While the invention has been illustrated and described in detail in the drawings and foregoing description, the same is to be considered as illustrative and not restrictive in character, it being understood that only the preferred embodiment has been shown and described and that all changes and modifications that come within the spirit of the invention and the scope of the claims are also desired to be protected.

The invention claimed is:

1. A control system for jet propelled watercraft comprising a generally straight conduit mounted on the craft extending and opening rearwardly thereof, means for pumping water through said conduit to exhaust from said opening, said conduit being constricted at the opening thereof for forming the water into a jet, a housing secured to the conduit and covering the opening thereof, said housing having a flat rearward wall generally perpendicular to said conduit, said rearward wall having a circular aperture therethrough positioned in registry with said jet, a flat circular disc gate received within said housing in perpendicular relation to said conduit and having a diameter which is greater than said circular aperture, a first arm rotatably connected at one end to said gate at the axis of the circular configuration thereof, said arm extending upwardly from said gate and being vertically reciprocal to move said gate to positions covering and uncovering said aperture, a further arm rotatably connected at one end to the other end of said first arm, said further arm being rotatably mounted at its other end on said craft, means secured to said further arm at its other end for rotation thereof to raise and lower said gate to positions covering and uncovering said aperture, inwardly and downwardly tapering guide means fixed to said rearward wall and positioned within said housing and arranged to guide said gate into said aperture covering position, said housing having only one further water outlet in addition to said aperture, said further outlet opening downwardly, a deflector pivotally mounted on said housing at the rearward edge of said further outlet and covering said further outlet, said deflector being pivotal between a first position wherein said deflector closes off said further outlet and a second position wherein said deflector extends forwardly and downwardly from the conduit below said further outlet for guiding water beneath the craft, said deflector when in said second position being so located that forward movement of the craft tends to cause water supporting the craft to be guided into said further outlet by said deflector, a spring fixed with relation to said conduit and bearing against said deflector urging it toward said first position, a hook-shaped member fixed to said deflector, limit members fixed with relation to said conduit and positioned for engagement by said hook-shaped member when in said second position for limiting said deflector against movement downwardly past said second position.

2. A control system for jet propelled watercraft comprising a conduit mounted on the craft extending and opening rearwardly thereof, means for pumping water through said conduit to exhaust from said opening, a housing secured to the conduit and covering the opening thereof, said housing having a circular aperture therethrough positioned in registery with said jet, a flat circular disc gate received within said housing in perpendicular relation to said conduit, a first arm rotatably connected at one end to said gate at the axis of the circular configuration thereof, said arm extending upwardly from said gate and being vertically reciprocal to move said gate to positions covering and uncovering said aperture, a further arm rotatably connected at one end to the other end of said first arm, said further arm being rotatably mounted at its other end on said craft, means secured to said further arm at its other end for rotation thereof to raise and lower said gate to positions covering and uncovering said aperture, inwardly and downwardly tapering guide means fixed to said housing and positioned within said housing and arranged to guide said gate into said aperture covering position, said housing having only one further water outlet in addition to said aperture, said further outlet opening downwardly, a deflector pivotally mounted on said housing at the rearward edge of said further outlet and covering said further outlet, said deflector being pivotal between a first position wherein said deflector closes off said further outlet and a second position wherein said deflector extends forwardly and downwardly from the conduit below said further outlet for guiding water beneath the craft, said deflector when in said second position being so located that forward movement of the craft tends to cause water supporting the craft to be guided into said further outlet by said deflector, a spring fixed with relation to said conduit and bearing against said deflector urging it toward said first position, limit members fixed with relation to said conduit and positioned to limit said deflector against movement downwardly past said second position.

3. A control system for jet propelled watercraft comprising a conduit mounted on the craft extending and

opening rearwardly thereof, means for pumping water through said conduit to exhaust from said opening, a housing secured to the conduit and covering the opening thereof, said housing having an aperture therethrough positioned in registry with said jet, a gate received within said housing, a first arm rotatably connected at one end to said gate at the axis of the circular configuration thereof, said arm extending upwardly from said gate and being vertically reciprocal to move said gate to positions covering and uncovering said aperture, a further arm rotatably connected at one end to the other end of said first arm, said further arm being rotatably mounted at its other end on said craft, means secured to said further arm at its other end for rotation thereof to raise and lower said gate to positions covering and uncovering said aperture, inwardly and downwardly tapering guide means fixed to said housing and positioned within said housing and arranged to guide said gate into said aperture covering position, said housing having only one further water outlet in addition to said aperture, said further outlet opening downwardly, a deflector movably mounted on said housing and covering said further outlet, said deflector being movable between a first position wherein said deflector closes off said further outlet and a second position wherein said deflector extends forwardly and downwardly from the conduit below said further outlet for guiding water beneath the craft, said deflector when in said second position being so located that forward movement of the craft tends to cause water supporting the craft to be guided into said further outlet by said deflector, and resilient means fixed with relation to said conduit and bearing against said deflector urging it toward said first position.

4. A control system for watercraft comprising a conduit mounted on said craft and having a first exit toward which said conduit extends, means for pumping water through said conduit toward said first exit, said conduit having a further exit opening downwardly in the sidewall thereof, a gate received within said conduit and movable to positions wherein said gate allows free flow, blocks or partially blocks flow through said first exit to cause flow through said further exit; a deflector mounted on said conduit at said further exit, said deflector being pivoted to said conduit at the rearward edge of said further exit and covering said further exit, said deflector being pivotal between a first position wherein said deflector closes off said further exit and a second position wherein said deflector extends forwardly and downwardly from the conduit for guiding water beneath the craft, said deflector when in said second position being so located that forward movement of the craft tends to cause water supporting the craft to be guided into said further exit by said deflector, a spring fixed with relation to said conduit and bearing against said deflector urging it toward said first position, limit members fixed with relation to said conduit and positioned to limit said deflector against movement downwardly past said second position.

5. A control system for watercraft comprising a conduit mounted on said craft and having a first exit toward which said conduit extends, means for pumping water through said conduit toward said first exit, said conduit having a further exit opening downwardly in the sidewall thereof, means for blocking flow through said first exit to cause flow through said further exit; a deflector movably mounted on said conduit at said further exit, said deflector being movable between a first position wherein said deflector closes off said further exit and a second position wherein said deflector extends forwardly and downwardly from the conduit for guiding water beneath the craft, said deflector when in said second position being so located that forward movement of the craft tends to cause water supporting the craft to be guided into said further exit by said deflector, and resilient means urging said deflector toward said first position.

6. A control system for watercraft comprising a conduit mounted on said craft and having a first rearwardly opening exit, means for pumping water through said conduit toward said first exit, said conduit having a further downwardly opening exit, means for blocking flow through said first exit to cause flow through said further exit; a deflector movably mounted on said conduit at said further exit, said deflector being movable between a first position wherein said deflector closes off said further exit and a second position wherein said deflector extends forwardly and downwardly from the conduit for guiding water beneath the craft, said deflector when in said second position being so located that forward movement of the craft tends to cause water supporting the craft to be guided into said further exit by said deflector, and resilient means urging said deflector toward said first position.

References Cited by the Examiner

UNITED STATES PATENTS

910,195	1/1909	Haskill	251—279 X
1,009,943	11/1911	Trainer	137—527.6 X
1,960,826	5/1934	Ouellett	115—15
2,024,274	12/1955	Campini	60—35.54
2,940,471	6/1960	Cupp	137—527.6
3,071,101	1/1963	Basso	60—35.54 X

FOREIGN PATENTS

567,870	3/1945	Great Britain.

SAMUEL LEVINE, *Primary Examiner.*

ABRAM BLUM, *Examiner.*