(12) STANDARD PATENT (11) Application No. **AU 2014246931 B2**
(19) AUSTRALIAN PATENT OFFICE

(54) Title
Dual-function catheter with two sliding sheaths

(51) International Patent Classification(s)
A61M 25/00 (2006.01) ***A61B 18/00*** (2006.01)
A61B 17/3203 (2006.01)

(21) Application No: **2014246931** (22) Date of Filing: **2014.04.01**

(87) WIPO No: **WO14/162093**

(30) Priority Data

(31) Number	(32) Date	(33) Country
1353033	**2013.04.04**	**FR**

(43) Publication Date: **2014.10.09**
(44) Accepted Journal Date: **2019.02.14**

(71) Applicant(s)
Boston Scientific Limited

(72) Inventor(s)
Ganon, Bertrand

(74) Agent / Attorney
Spruson & Ferguson, L 24 Tower 2 Darling Park 201 Sussex St, Sydney, NSW, 2000, AU

(56) Related Art
EP 1800612 A1
US 2012/0035607 A1
EP 1462142 A1
US 2011/0028887 A1

(12) DEMANDE INTERNATIONALE PUBLIÉE EN VERTU DU TRAITÉ DE COOPÉRATION EN MATIÈRE DE BREVETS (PCT)

(19) Organisation Mondiale de la Propriété Intellectuelle
Bureau international

(43) Date de la publication internationale
9 octobre 2014 (09.10.2014)

WIPO | PCT

(10) Numéro de publication internationale
WO 2014/162093 A1

(51) Classification internationale des brevets :
A61M 25/00 (2006.01) *A61B 18/00* (2006.01)
A61B 17/3203 (2006.01)

(21) Numéro de la demande internationale :
PCT/FR2014/050776

(22) Date de dépôt international :
1 avril 2014 (01.04.2014)

(25) Langue de dépôt : français

(26) Langue de publication : français

(30) Données relatives à la priorité :
1353033 4 avril 2013 (04.04.2013) FR

(71) Déposant : **NESTIS** [FR/FR]; 8 rue Duployé, F-38100 Grenoble (FR).

(72) Inventeur : **GONON, Bertrand** *(décédé)*.

(74) Mandataire : **SANTARELLI**; BP 237, 14 avenue de la Grande Armée, F-75822 Paris Cedex 17 (FR).

(81) États désignés *(sauf indication contraire, pour tout titre de protection nationale disponible)* : AE, AG, AL, AM, AO, AT, AU, AZ, BA, BB, BG, BH, BN, BR, BW, BY, BZ, CA, CH, CL, CN, CO, CR, CU, CZ, DE, DK, DM, DO, DZ, EC, EE, EG, ES, FI, GB, GD, GE, GH, GM, GT, HN, HR, HU, ID, IL, IN, IR, IS, JP, KE, KG, KN, KP, KR, KZ, LA, LC, LK, LR, LS, LT, LU, LY, MA, MD, ME, MG, MK, MN, MW, MX, MY, MZ, NA, NG, NI, NO, NZ, OM, PA, PE, PG, PH, PL, PT, QA, RO, RS, RU, RW, SA, SC, SD, SE, SG, SK, SL, SM, ST, SV, SY, TH, TJ, TM, TN, TR, TT, TZ, UA, UG, US, UZ, VC, VN, ZA, ZM, ZW.

(84) États désignés *(sauf indication contraire, pour tout titre de protection régionale disponible)* : ARIPO (BW, GH, GM, KE, LR, LS, MW, MZ, NA, RW, SD, SL, SZ, TZ, UG, ZM, ZW), eurasien (AM, AZ, BY, KG, KZ, RU, TJ, TM), européen (AL, AT, BE, BG, CH, CY, CZ, DE, DK, EE, ES, FI, FR, GB, GR, HR, HU, IE, IS, IT, LT, LU, LV, MC, MK, MT, NL, NO, PL, PT, RO, RS, SE, SI, SK, SM, TR), OAPI (BF, BJ, CF, CG, CI, CM, GA, GN, GQ, GW, KM, ML, MR, NE, SN, TD, TG).

Publiée :

— *avec rapport de recherche internationale (Art. 21(3))*

(54) **Title** : DUAL-FUNCTION CATHETER WITH TWO SLIDING SHEATHS

(54) **Titre** : CATHETER BI-FONCTIONNEL A DEUX GAINES COULISSANTES

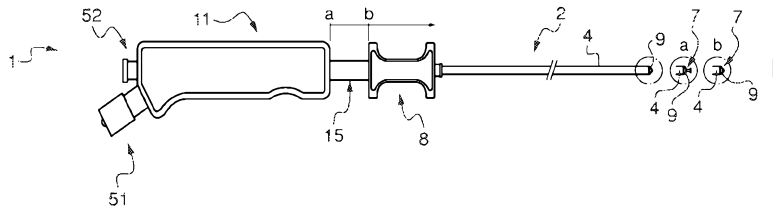

Fig. 16

(57) **Abstract** : The present application concerns a dual-function catheter (1) comprising an inner sheath, forming a conduit (2), fastened by a proximal end to a connector making it possible to connect the catheter (1) to a fluid reservoir and to an electric generator, an injection nozzle (7) fastened to a distal end of the inner sheath and forming an electrode, and an outer sheath (4), surrounding the inner sheath, fastened to a sleeve (8), the sleeve (8) and the outer sheath (4) sliding relative to the inner sheath and taking up at least a pushed position ("b") in which the outer sheath (4) covers at least a portion of the injection nozzle (7) and a pulled position ("a") in which the outer sheath (4) uncovers said portion of the injection nozzle (7). The present application further concerns a device comprising such a catheter.

(57) **Abrégé** : La présente demande concerne un cathéter (1) bi-fonctionnel comprenant une gaine intérieure, formant un conduit (2), fixée par une extrémité proximale à un connecteur permettant de relier le cathéter (1) à un réservoir de fluide et à un générateur électrique, une buse d'injection (7) fixée à une extrémité distale de la gaine intérieure et qui forme une électrode, et une gaine extérieure (4), entourant la gaine intérieure, fixée à un manchon (8), le manchon (8) et la gaine extérieure (4) coulissant par rapport à la gaine intérieure et prenant au moins une position poussée (« b ») dans laquelle la gaine extérieure (4) recouvre au moins une partie de la buse d'injection (7) et une position tirée (« a ») dans laquelle la gaine extérieure (4) découvre ladite partie de la buse d'injection (7). La présente demande vise en outre un dispositif comprenant un tel cathéter.

WO 2014/162093 A1

22 Jan 2019 2014246931

DUAL-FUNCTION CATHETER WITH TWO SLIDING SHEATHS

The present invention concerns a catheter and more particularly a catheter for injecting fluid. It also concerns a dual function catheter as well as a device comprising at least one catheter for injecting fluid.

Conventionally, a catheter for injecting fluid comprises a sheath with an injection nozzle, which is moreover connected to a reservoir of fluid making it possible, for example, to inject a fluid under pressure.

For example the document FR2830455 is known which describes a catheter for injecting a fluid under pressure. The catheter comprises a sheath with a retractable injection tool at its distal end, the injection tool being a perforating, cutting, or pricking injection tool.

However, in such a catheter, the injection of fluid actuates the extension of the tool, which, although having the advantage of being able to retract the perforating, cutting or pricking tool automatically, requires a minimum of pressure from the fluid in order to extend the tool. Furthermore, certain applications may require more precise positioning of the tool before injecting the fluid. However, it is preferable to protect the organs or tissues from any cutting part, for example such as the tool. It is thus more prudent to insert a catheter comprising a cutting tool with the tool protected.

The present invention aims to mitigate at least some of the aforesaid drawbacks and furthermore to give rise to other advantages.

According to a first aspect, a dual function catheter comprising: a conduit , wherein the conduit includes an inner sheath, a connector comprising a fluidic connection, an electrical connection, and an outlet connection, wherein a proximal end of the inner sheath is in fluid communication with the outlet connection, and wherein the connector couples the catheter to a fluid reservoir, an injection nozzle coupled to a distal end of the inner sheath, an electrode, and an outer sheath , surrounding the inner sheath, wherein the outer sheath is coupled to a sleeve, the sleeve and the outer sheath sliding relative to the inner sheath and adopting at least one pushed position in which the outer sheath covers at least a part of the injection nozzle and a pulled position in which the outer sheath exposes said part of the injection nozzle, wherein the

2014246931 22 Jan 2019

injection nozzle is electrically conductive and forms the electrode such that the injection nozzle and the electrode are grouped together into a single component, wherein a distalmost end of the injection nozzle has a width greater than a width of said part of the injection nozzle that is selectively covered and exposed by sliding of the outer sheath, the width of the distalmost end blocking entry of the distalmost end into the outer sheath, and a tip ring at a distal end of the outer sheath and adapted to slide over said part of the injection nozzle, wherein the tip ring includes a passage for slidably receiving said part of the injection nozzle, the tip ring comprising: a cylindrical proximal stem received in the outer sheath, the cylindrical proximal stem having a radially outer surface that engages a radially inner surface of the outer sheath, and a distal head protruding distally from a distalmost end of the outer sheath, and radially outwardly from the cylindrical proximal stem.

Such a catheter thus gives independence between an injection of fluid and a retraction of the nozzle, in a simple and safe manner, in particular if the nozzle is a pricking or cutting nozzle. In a general case, as a nozzle typically has a very narrow geometry, it is thus protected when the catheter is inserted to avoid it being accidentally damaged, or avoid it scratching or snagging a tissue or an organ when the catheter is inserted.

"Fluid" here means any liquid, such as water, a saline solution or a liquid having a high viscosity, as well as macromolecular compounds or therapeutic compounds.

More particularly, the fluid under pressure is for example a saline solution or a more viscous solution according to the requirements of the application. Injecting a viscous fluid in particular enables slower resorption into a tissue than if the fluid is of very low viscosity.

The nozzle of such a catheter thus adopts two positions, a retracted position in which it is at least partly covered by the outer sheath, and an extended, protruding position, for a specific utilization.

The outer sheath, sliding on the inner sheath, is for example shorter than the inner sheath.

In other words, the nozzle, the inner sheath and the connector form a first assembly, and the outer sheath and the sleeve form a second assembly, adapted to slide relative to the first assembly.

2014246931 22 Jan 2019

"Sleeve" here designates any member or part, optionally with a texture, that facilitates gripping of the outer sheath to impart a pushed or pulled movement to it. This may be a textured region in the sheath or a plastics ring for example.

In the pushed position, the sleeve is for example located away from the connector relative to the pulled position in which it is for example located towards the connector.

Thus, when the catheter is introduced, for example into an organ, the nozzle, at least partially retracted, enables safer insertion, that is to say with less risk of accidentally perforating or scratching part of the organ or another organ for example. Once a distal end of the catheter is in position, the nozzle is extended by pulling the outer sheath, via the sleeve, and it is then possible to adjust its position if necessary.

Organ is used here to mean any organ, tissue, vein or artery, or any part of the body for which such a catheter would be required at least for an injection of fluid.

The fact that it is the outer sheath which is movable facilitates any formation of a sealing connection between the inner sheath in which a fluid is to flow and a reservoir of fluid or other elements. This therefore makes it possible to reduce the production costs.

The nozzle next penetrates a superficial layer of the organ, for example a mucosa. It is then possible to raise and separate a polyp or a lesion of a mucosa relative to an underlying muscle layer, in order then to remove the polyp or lesion for example. The injection of the fluid separates the mucosa from the muscle and raises the polyp situated in the mucosa, which is then potentially cut and dissected by the fluid under high pressure and optionally assisted by an electrode connected to an electricity generator (for example an ESU, standing for "electrical surgical unit", i.e. an electrical surgical unit for endoscopic surgery).

The injection nozzle is optionally a perforating nozzle to facilitate the injection of a fluid under a membrane or a mucosa covering a muscle layer for example.

The inner and outer sheaths preferably exhibit pliability and/or flexibility over their length, in order to be easily introduced into a vein, an artery or some other organ and in a medical tool such as an endoscope. However, it is preferable to be able to avoid causing the sheaths to fold, and to limit irreversible deformations of a section of the sheaths that would obstruct the passage of the fluid (for example buckling, in particular of the inner sheath if

that sheath is flexed). For this, the sheaths are for example produced from biocompatible polymers.

According to an example embodiment, the inner sheath is of PEBA.

According to an example embodiment, the outer sheath is of Teflon.

Such a catheter makes it possible to limit or even avoid losses of pressure and exhibits high flexibility without naturally enabling easy irreversible folding (plasticity).

Thanks to its flexibility, it also enables fluids of greater or lesser viscosity to be injected using straight view or retroflexion when it is inserted, for example, in an endoscope exhibiting plasticity that enables it to be sharply bent.

Thus, according to an aspect that is original per se, independently of any sliding between the sheaths, a catheter for injecting fluid is also provided comprising a conduit, characterized in that it comprises an inner sheath produced from PEBA which forms the conduit, and an outer sheath produced from Teflon, surrounding the inner sheath. The inner sheath is optionally fastened by a proximal end to a connector enabling the catheter to be connected to a fluid reservoir. An injection nozzle is also, for example, fastened to a distal end of the inner sheath.

According to an example embodiment, the catheter comprises a tip ring fastened to a distal end of the outer sheath adapted to slide over at least part of the injection nozzle.

Such a tip ring for example provides surface continuity with the nozzle that is retracted at least partly to facilitate the introduction of the catheter. It moreover facilitates guiding between the inner sheath and the outer sheath when they slide relative to each other. Lastly, such a tip ring is for example an insulator, it enables the movements of the nozzle to be controlled, it also optionally serves as a seal to avoid the fluid infiltrating between the inner sheath and the outer sheath.

For example, the tip ring is of ceramic, because ceramic is an easy material to employ (molding or machining for example), and is both biocompatible and electrically insulating. Other materials may of course be envisioned, for example polymers.

The tip ring for example has a head of rounded distal shape. Such a shape is better ergonomically for the insertion of the catheter when the nozzle is retracted at least partially.

According to an advantageous embodiment, the injection nozzle furthermore forms an electrode such that the catheter is a dual function catheter.

A dual function catheter is thus also provided comprising:

- a conduit,
- a connector comprising a fluidic connection and an electrical connection,
- an inner sheath, forming the conduit, fastened by a proximal end to an outlet connection of the connector enabling the catheter to be connected to a fluid reservoir,
- an injection nozzle fastened to a distal end of the inner sheath,
- an electrode,
- and an outer sheath, surrounding the inner sheath, fastened to a sleeve, the sleeve and the outer sheath sliding relative to the inner sheath and adopting at least one pushed position ("b") in which the outer sheath covers at least a part of the injection nozzle and a pulled position ("a") in which the outer sheath exposes said part of the injection nozzle.

characterized in that the injection nozzle forms the electrode such that the nozzle and the electrode are grouped together into a single component.

Such a dual function catheter thus makes it possible to raise and detach a polyp or a lesion from a muscle layer below and to remove the polyp or lesion with a single tool having among others the advantages cited above, for example such as insertion of the catheter that is rendered safe since the nozzle (also serving as an electrode) is retracted at least partially. The perforation of the tissue for the injection of the fluid may then also be carried out by the nozzle, next introduced under the tissue for the injection of the fluid, which may thus dispense with a beveled shape for example. After injection, it is also the nozzle which can then cut up the polyp or the lesion in order to remove them.

A dual function catheter here designates a catheter for injection and dissection by electrical surgery i.e. a catheter making it possible to inject a fluid under pressure under a tissue or a mucosa, and to cut the tissue or the mucosa with the electrode in the same tool. Thus, the electrode considered here is an electrical surgical dissection electrode.

In other words, such a catheter makes it possible to inject a fluid under pressure through a nozzle present in an electrode.

According to a preferred example embodiment, the jet of fluid passes through the center of the electrode.

The electrode, which is thus also the nozzle, comprises for example a central channel, configured to inject fluid.

A central jet is better adapted for injecting fluid to swell a zone (for example detach the mucosa from the muscle in order to cut up the mucosa more easily without risking damage to the muscle), whereas when a jet is at the periphery of an electrode, the jet is better adapted for washing the zone for example. The nozzle and the electrode thus grouped together into a single component are thus centered relative to each other. The component forming the nozzle and the electrode exhibit axial symmetry for example.

According to an example embodiment, the electrode comprises an annulus in the form of a holed circular plate to be fastened at a distal end of the electrode.

According to an example embodiment, the connector comprises a fluidic connection and an electrical connection.

The connector is for example a Y-connector or a T-connector with a fluidic connection for the fluid reservoir and an electrical connection, in addition to a so-called "outlet" connection, connecting it to the inner sheath

According to a particular example embodiment, the electrode is connected to the electrical connection by a conductive wire running in the inner sheath. The conductive wire is electrically conductive, and is for example a metal wire.

In other words, the dual function catheter comprises a conductive wire disposed inside the inner sheath and linked both to the electrode, that is to say to the nozzle, and to the electrical connection.

Furthermore, the inner sheath links the connector to the electrode, which serves as a nozzle. Thus in practice, the fluid to inject passes from the fluidic connection, into the inner sheath, to the electrode, by virtue of its channel. The conductive wire is then immersed in the fluid to inject.

Thus, for example, contrary to other devices in which the electrode is connected by a metal tube passing along the whole length of the catheter, itself capable of forming the conduit, such a catheter has the advantage of pliability and/or flexibility, and makes it possible to avoid blockages (by folding of the metal tube leading to buckling), head losses and pressure losses or jamming in translation of the outer sheath relative to the inner sheath.

The present invention also concerns a device comprising a pulsed jet generator comprising a reservoir and a catheter, characterized in that the catheter is a catheter as defined above having firstly a connection to the pulsed jet generator by a fluidic connection of the connector.

The device generates the fluid under pressure (for example a saline solution), sends it via the catheter and injects it by the nozzle situated at one end of the catheter into a soft tissue (such as the mucosa or a sub-mucosa).

If the catheter is dual function, the device then comprises an injection nozzle and an electrode connected to an electricity generator (an "ESU" standing for "electro surgical unit"), the electrode and the nozzle then being produced in a single component. The catheter then furthermore has secondly a connection to an electricity generator by an electrical connection of the connector.

According to an advantageous example embodiment, the pulsed jet generator is a high pressure pulsed jet generator for generating fluid pulses under high pressure from at least one fluid contained in a flexible bag forming the reservoir placed in a pressurized fluid-tight chamber, the chamber having at least one outlet for fluids, the generator comprising:

- a pressurization device for the chamber which comprises a source of gas under pressure which supplies a gas under pressure entering the chamber to increase its internal pressure,
- a pressure regulating device which regulates the pressure inside the chamber,
- at least one joining connector for joining a flexible bag to a connection conduit, this joining connector and the connection conduit being disposed in the chamber,
- a hydraulic sequencer comprising at least:
  - an inlet into which enters at least the connection conduit, and an outlet to which is connected an outlet conduit communicating hydraulically with the outside of the generator,
  - a flexible deformable envelope provided in a hydraulic connection, all of this being exposed to the pressure inside the chamber,
  - at least one hydraulic obturating valve in the hydraulic connection,
  - a means for actuating the hydraulic obturating valve,
- and the fluid-tight outlet conduit between the outlet of the sequencer and the outlet of the chamber connected to a conduit for external connection with the catheter.

Such a generator is described in the international application WO2011/148333.

For example, the generator is adapted to generate a pulse of fluid at a pressure comprised between 2 and 30 bars.

The pressure of the fluid is for example 10 bars (i.e. approximately 145 psi) for a saline solution (~water), and 20 bars (i.e. approximately 290 psi) when the fluid is viscous.

For example, the generator is adapted to generate a pulse of fluid with a volume of fluid per pulse comprised between 100 µL and 10 mL.

The pulse is controlled by an on-off solenoid valve (often called a clamp valve, which enables pulses to be generated, in contrast to a continuous

jet for example) situated in the pressurized chamber itself controlled for example by a user interface. The solenoid valve for example forms at least one hydraulic obturating valve situated upstream of the flexible deformable envelope.

Flexible deformable envelope is used here to mean that part of the hydraulic connection deforms according to the variation in pressure inside the chamber. It is for example formed thanks to a narrowed wall portion of the hydraulic connection, or by a bulb formed in the hydraulic connection. According to another example, the flexible deformable envelope is also optionally an independent component, the hydraulic connection then comprising a part that is upstream and a part that is downstream relative to the flexible deformable envelope.

Such a device thus makes it possible to limit or even avoid the risks of perforating the muscle and has a low production cost.

Thus such a device makes it possible to cut and dissect soft tissues in open surgery, as well as by endoscopy and/or laparoscopy.

The invention, according to an example embodiment of the invention, will be well understood and its advantages will be clearer on reading the following description, given by way of illustrative example that is in no way limiting, with reference to the accompanying drawings.

Figure 1 represents a dual function catheter according to an example embodiment of the invention,

Figure 2 represents a view from above, in partial cross-section, of the catheter of Figure 1,

Figure 3 an example embodiment in cross-section, of the catheter of Figure 1,

Figures 4 to 15 illustrate example embodiments of different components constituting the catheter of Figures 1 to 3:

Figures 4 and 5 represent an example embodiment of a casing of the catheter, in two parts,

Figure 6 represents an example embodiment of a tube enabling an inner sheath to be joined to a connector detailed in Figure 15,

Figure 7 represents an example embodiment of an intermediate component for connecting a sleeve represented in Figure 10 to an outer sheath by virtue of a ring illustrated in Figure 9,

Figure 8 represents an example embodiment of an electrical plug protector,

Figure 9 represents an example embodiment of the ring enabling the outer sheath to be fastened to the intermediate component,

Figure 10 represents an example embodiment of the sleeve,

Figures 11a and 11b respectively represent a perspective view and a cross-section view of a tip ring of the outer sheath according to an example embodiment of the present invention.

Figure 12 represents a nozzle according to an embodiment of the present invention,

Figures 13a and 13b represent a nozzle, respectively not in cross-section and in cross-section, according to another embodiment of the present invention,

Figure 14 represents an annulus for a distal end of a nozzle according to one embodiment of the present invention, the annulus having the form of a holed circular plate adapted to be fastened to an end of the nozzle as represented for example in Figures 13a and 13b,

Figure 15 illustrates an example embodiment of a connector with two inlet passages,

Figure 16 illustrates a link between the position of the sleeve and the outlet of the nozzle according to an example embodiment of the present invention, and

Figure 17 illustrates a device according to an embodiment of the invention.

Identical components represented in Figures 1 to 17 are identified by identical numerical references.

In the present example embodiment of the invention, a catheter 1 for injecting fluid comprises a conduit 2 connected to a casing 11 comprising a connector 5.

The conduit 2 comprises:

- an inner sheath 3 (visible for example in enlargement A of Figure 3), fastened by a proximal end to the connector 5 enabling the catheter 1 to be connected to a reservoir of fluid 6 (represented in Figure 17),
- an injection nozzle 7 fastened to a distal end of the inner sheath 3,
- and an outer sheath 4, surrounding the inner sheath 3, fastened to a sleeve 8, the sleeve 8 and the outer sheath 4 sliding relative to the inner sheath 3 and adopting at least one pushed position (position "b" illustrated in Figure 16) in which the outer sheath 4 covers at least a part of the injection nozzle 7, and a pulled position (position "a" illustrated in Figure 16) in which the outer sheath 4 exposes said part of the injection nozzle 7.

The inner sheath 3 is for example produced from PEBA, and the outer sheath 4 is for example produced from Teflon.

A tip ring 9 is here fastened to a distal end of the outer sheath 4 and is adapted to slide over at least a part of the injection nozzle 7.

The tip ring 9 is for example of ceramic. It furthermore has a head 90 of rounded distal shape, as illustrated by Figures 11a and 11b.

In other words, the catheter 1 comprises two assemblies adapted to slide relative to each other.

A first assembly, referred to here as "fixed assembly" comprises the nozzle 7, the inner sheath 3, a tube 17, the connector 5, a plug protector 18 and the electrical plug 14, and the casing 11.

A second assembly, referred to here as "movable assembly" comprises the tip ring 9, the outer sheath 4, the sleeve 8, an intermediate component 15, and a ring 16.

Of course, these definitions of assemblies are for ease of understanding in the present description, and the attributes "fixed" and "movable" are arbitrary here for defining one assembly relative to the other.

With reference to the fixed assembly, as shown by enlargement A of Figure 3, the nozzle 7 is sunk into the outer sheath 3. It is for example bonded inside the inner sheath 3 at its distal end.

As shown by Figures 12 to 14, the nozzle 7 here has a connecting zone 70 promoting attachment between the nozzle 7 and the inner sheath 3. The connecting zone 70 furthermore has grooves 71 and a flat 72. The grooves 71 are for example able to serve as spillways for adhesive if the assembly is formed by bonding, in order to avoid adhesive overflowing, which furthermore gives a sloppy and unaesthetic appearance. The grooves 71 also enable better gripping between the nozzle 7 and the inner sheath 3, whereas the flat 72 serves as a fool-proof device for the insertion of the nozzle 7 into the inner sheath 3 and/or as a marker if it is preferable to insert the nozzle 7 with a particular orientation. The flat 72 also enables the insertion of the nozzle 7 into the inner sheath 3 to be facilitated since it gives rise to a reduction in cross-section. According to another embodiment not shown, it would however be possible for there to be only one groove 71.

The nozzle 7 furthermore has a useful zone 73, outside the inner sheath 3 when they are assembled together. The useful zone 73 has a distal end 74a having an outlet orifice 75 by which the fluid is injected into or under a tissue where applicable. The distal end 74a is optionally a pricking or cutting end, or is for example beveled (not shown here).

In the example embodiment of Figures 13A and 13B, the useful zone 73 has a narrowed cross-section relative to the connecting zone 70. This makes it possible to create a shoulder 76 serving for example as an abutment for the tip ring 9 when that ring is in the pulled position, exposing the nozzle 7, as for example shown by element A of Figure 3. A smaller cross-section also enables a smaller hole to be formed in the tissue when the nozzle penetrates a mucosa to inject fluid, and this also enables the nozzle 7 to be inserted more easily into the tissue.

In the example embodiment described here, the catheter 1 is a dual function catheter, that is to say that the nozzle 7 also serves as an electrode. Consequently, the nozzle 7 is for example produced from a conductive material,

for example a metal, and is connected by a conductive wire 10, for example of metal, running in a channel 30 of the inner sheath 3, to an electrical plug 14 connected to an electrical connection 51 of the connector 5. The conductive wire 10 is preferably soldered to a proximal end 74b of the nozzle 7.

In the case of a nozzle also serving as an electrode, it is for example useful for the distal end 74a to be provided with an annulus 78 (represented in Figure 14). To provide better positioning of the annulus 78, it is then advantageous for the distal end 74a of the nozzle 7 to have a narrowed portion 77 (represented here in the embodiment of Figure 13), forming another shoulder, adapted to receive the annulus 78. Such a narrowed portion 77 could also be formed at the distal end 74a of the nozzle 7 of Figure 12. The annulus 78 may however be fastened to the distal end 74a of the nozzle 7 without such a narrowed portion, for example by bonding, but this configuration then renders its positioning more difficult.

The annulus 78 here takes the form of a holed circular plate so as to fit the cross-section of the distal end 74a (i.e. of the useful end 73 or of the narrowed portion 77 if there is one).

From an internal point of view, as shown by Figure 13B, the nozzle 7 comprises a channel 79 enabling a fluid to be conveyed from the inner sheath 3 to the outlet orifice 75. In the example embodiment of Figure 13B, the channel 79 has a cross-section which, on average, narrows towards the outlet orifice 75.

More specifically, the channel 79, relatively centered in the nozzle 7, here has the largest possible section 79a directly connected to the channel 30 of the inner sheath 3, a funnel-shaped section 79b, an intermediate section 79c which is slightly wider here than the funnel-shaped section 79b, and an injection section 79d. These various sections are arranged so as to minimize turbulence in the fluid flow while maintaining pressure of the fluid outletting from the outlet orifice 75 with a minimum of loss. It can be noted for example that sections 79a, 79b and 79c are arranged so as to form an ejection pipe.

At the other end of the inner sheath 3, at its proximal end, the inner sheath 3 is fastened to the tube 17, detailed in Figure 6.

The tube 17 is in turn sunk into an outlet branch 53 of the connector 5.

In the present example embodiment, as detailed in Figure 6, the tube 17, of cylindrical general shape, has a groove 170 here extending lengthwise over a major part of the tube 17. The groove 170 is for example able to serve as a spillway for adhesive if the assembly is formed by bonding, in order to avoid adhesive overflowing, which furthermore gives a sloppy and unaesthetic appearance. The groove 170 also promotes gripping of the tube 17 in the connector 5, which for example are assembled by bonding.

As mentioned earlier, the connector 5 here has an outlet branch 53. It also comprises at least one branch 52 serving for a fluidic connection, designated "fluidic connection 52", and in the case of a dual function catheter, it further comprises a branch 51 serving for an electrical connection, designated "electrical connection 51". Thus the connector 5 is a Y-connector here, with a fluidic connection 52 for the fluid reservoir 6, an electrical connection 51 and an outlet connection 53 connecting it to the inner sheath 3.

The connector 5 has a channel 56 enabling the fluid to be conveyed, which is consequently in direct communication with the channel 30 of the inner sheath 3.

To facilitate the insertion of the tube 17 into the outlet branch 53, the outlet branch 53 here has a beveled end 54. It furthermore has an inclined shoulder 55 forming an abutment for the tube 17.

The fluidic connection 52 here has a threaded end 52a for a Luer-Lock connection for an arrival of fluid under pressure in the channel 56, of which a section 56a, at the location of the branch 52, is widened towards the arrival of the fluid, for example to limit turbulence in the flow when it arrives in the catheter 1.

The branch 51 serving for the electrical connection receives the electrical plug 14 connected to the conductive wire 10.

The electrical plug 14 is protected here by the plug protector 18, which is for example held by its foot 180 between on one side the branches 51 and 52 of the connector, and on another side the casing 11 when the entire

catheter 1 is assembled. As regards the electrical plug 14, this is, for example, held in position by a thickened region 140 taken between the branch 51 and an inner edge 181 of the plug protector 18.

Thus, the channel 56 of the connector 5, the channel 30 of the inner sheath 3, and the channel 79 of the nozzle 7 enabling the fluid to inject to be conveyed from a reservoir, for example such as the reservoir 6 of a pulsed jet generator 101, to the outlet orifice 75 of the nozzle 7.

In parallel, the conductive wire 10 passes along the channel 30 of the inner sheath 3 and the channel 56 of the connector 5, forking into the branch 51.

Once assembled, the aforesaid components are then fixed in the casing 11.

In comparison, the second assembly is considered as movable relative to that first assembly.

The tip ring 9 (detailed in Figure 11) is fastened in a distal end of the outer sheath 4, as shown by enlargement A of Figure 3. The tip ring 9 here also has a groove 91 promoting better gripping in the outer sheath 4 and is also able to serve as a spillway for adhesive if the assembly is formed by bonding, in order to avoid adhesive overflowing, which furthermore gives a sloppy and unaesthetic appearance. As mentioned earlier, the tip ring 9 has a rounded distal shape forming a head 90 of the tip ring 9. Preferably, the head 90 of the tip ring 9 is slightly wider so as to provide continuity with an outside surface of the outer sheath 4 when they are assembled. The tip ring 9 lastly comprises a channel 93 terminating with an orifice 92 formed at an apex of the head 90. The channel 93 has for example a diameter substantially equal to a diameter of the useful zone 73 of a nozzle 7 to slide on that useful zone 73 while at the same time enabling sealing between the nozzle 7 and the tip ring 9 to avoid fluid or anything else infiltrating between the inner sheath 3 and the outer sheath 4.

Furthermore, in pulled position ("a") the tip ring 9 for example abuts a distal end of the inner sheath 3, or even also of the shoulder 76 if it exists, and in pushed position ("b") the tip ring 9 by its head 90 abuts the annulus 78 if the nozzle 7 is provided therewith.

At another end, its proximal end, the outer sheath 4 is fastened into the intermediate component 15 by the ring 16, as shown by the element B of Figure 3.

The intermediate component 15 here is a slender component represented diagrammatically in Figures 2 and 3, and detailed in Figure 7.

The outer sheath 4 passes here within the intermediate component 15, and around a body 160 of the ring 16. In order for the ring 16 to be inserted more easily into the outer sheath 4, it has for example a beveled first end 161. Furthermore, the ring 16 also enables an abutment to be formed when the movable assembly is in pulled position ("a") by coming to bear for example on a reinforcing member 130 of the casing 11. For this, the ring 16 advantageously has a head 162 wider than the body 160.

The head 162 furthermore serves as an abutment for the intermediate component 15 when the ring 16, surrounded by the outer sheath 4, is sunk into it. Lastly, the ring 16 has a channel 163 of diameter substantially equal to a diameter of the inner sheath 3 to be able to slide along the inner sheath 3.

The intermediate component 15 here has a first zone 151 adapted to cooperate with the sleeve 8, and a second zone 152 adapted to be positioned inside the casing 11.

The first zone 151 has a flat 150, for example over its whole length, adapted to cooperate with a flat 80 of the sleeve 8 for example to give rise to an obligatory mounting orientation for the sleeve 8 on the intermediate component 15. This is for example useful if the sleeve 8 comprises indications, for example such as arrows illustrating the positions "a" and "b" to extend or retract the nozzle 7.

The first zone 151 also has grooves 153 to promote gripping with the sleeve 8. The grooves 153 are also able to serve as spillways for adhesive if the assembly is formed by bonding, in order to avoid adhesive overflowing, which for example gives a sloppy and unaesthetic appearance. The first zone 151 here has a diameter generally less than a diameter of the second zone 152 so as to form a shoulder 154 able to serve as an abutment on insertion of the

sleeve 8. The first zone 151 lastly has a transition zone 155 enabling the diameter of the first zone 151 to be reduced progressively relative to a diameter of the outer sheath. According to one option not shown, a flexible envelope, for example of elastomer, may be present between the intermediate component 15 and the sleeve 8 such that the sleeve 8 is force fitted, for example over the flexible envelope applied over the intermediate component 15. The flexible envelope may for example extend on each side beyond the first part 151.

Once the assembly has been formed, the sleeve 8 is for example in abutment against the casing 11 when the catheter is in pulled position ("a").

The second zone 152 furthermore has here two pairs of depressions 157a, 157a' and 157b, 157b' adapted to cooperate with two posts 120, 120' formed in the casing 11. The two depressions of a pair (157a and 157a', and 157b and 157b') are preferably formed diametrically oppositely such that the two posts 120, 120' thus enable holding and guiding of the intermediate component 15 in the casing 11. However, other configurations may be envisioned which would for example only rely on a single depression at a time.

The two pairs of depressions 157a, 157a' and 157b, 157b' in particular here enable indexing of pulled position ("a") or pushed position ("b"). More particularly, in pulled position, the pair 157a, 157a' cooperates with the posts 120, 120' whereas in pushed position, it is the pair 157b, 157b' that cooperates with the posts 120, 120'. On passage from one position to the other, the intermediate member 15 is then slightly compressed between the posts 120, 120' which gives the user a slight sensation of resistance until one of the two pairs of depressions are face to face with the posts 120, 120'. Furthermore, the positioning of the depressions relative to the posts 120, 120' is ensured thanks to the various abutments presented above (for example such as between the tip ring 9 and the annulus 78 or between the tip ring 9 and the inner sheath 3, or the ring 16 against the reinforcing member 130, or furthermore the sleeve 8 against the casing 11) which prevents a user from pulling or pushing more than necessary, which could for example damage the various adhesive joints or assemblies of parts, or the parts themselves.

Furthermore, the intermediate component here also comprises a trough 156. The trough 156 for example is of length equal to or slightly greater than a separation between the two pairs of depressions 157a, 157a' and 157b, 157b'. The trough 156 here cooperates with a finger 121 of the casing 11. The cooperation between the trough 156 and the finger 121 makes it possible not only to render safe the movements of the movable assembly to avoid a user pulling beyond the pulled position or pushing beyond the pushed position, but also to prevent a rotation, or even torsion, of the movable assembly relative to the fixed assembly. Preferably, the finger 121 is then of a diameter substantially equal to a width of the trough 156. In the present example embodiment, the trough 156 is positioned between the two posts of the same pair and at equal distances between them. The finger 121 is here slightly offset relative to the posts 120, 120' as shown by Figures 2 and 5. Thus, in pulled position ("a"), the pair of depressions 157a, 157a' cooperates with the posts 120, 120' while the finger 121 is close to, or even in contact with to form an abutment, a bottom 156a of the trough 156. In pushed position ("b"), not shown in detail here, the pair of depressions 157b, 157b' would cooperate with the posts 120, 120' while the finger 121 would be close to, or even in contact with to form an abutment, a bottom 156b of the trough 156.

Even though the different components are not represented at the same scale, it can nevertheless be noted that the separation between the pair 157a, 157a', and the pair 157b, 157b' is substantially greater than a length of a part of the useful zone 73 of the nozzle 7 which can be exposed or retracted. This is in particular due to an effect of structure (existence of play, elasticity of the mounting), as well as to the elastic properties of the different parts and of the materials constituting them. It is to be recalled for example that the conduit 2 typically measures more than a meter in length for a maximum diameter of approximately 2.5 mm, or even less.

In the present example embodiment illustrated here, the casing 11 is formed from a male part 12 (represented in Figure 5) and from a female part 13 (represented in Figure 4). The posts 120, 120' are here formed in the male part 12. In Figure 3, illustrating the positioning of the different components of the

catheter 1 in the female part 13 of the casing 11, the posts 120 and 120' have however been represented in dashed line to illustrate their positioning relative to the pairs of depressions 157a, 157a' and 157b, 157b'.

Once the different components of the catheter 1 have been positioned for example in the female part 13, the casing 11 may be closed again by the male part 12, for example by welding or by bonding. The casing 11 is for example formed from plastics material, for example by molding. For this assembly, the female part 13 for example has a rim 13' and the male part 12 for example has a rim 12' adapted to be juxtaposed against the rim 13' in the female part 13.

As shown by Figures 4 and 5, the casing 11 further comprises different pairs of assembly projections 122, 132 (in this case six pairs) comprising a male projection 122 in the male part 12 and a female projection 132 in the female part 13 of the casing 11.

The casing also includes reinforcing members, such as reinforcing member 130, cooperating with a reinforcing member 123 of the male part. The reinforcing members 130 and 123 respectively have a cavity 134 and 124 adapted to receive the inner sheath 3 to keep it in position. The cavities 134 and 124 consequently have a curvature substantially equal to a curvature of a cross-section of the inner sheath 3. The male part furthermore has a reinforcing member 125 provided with a cavity 126, and the female part has a reinforcing member 135 complementary to the reinforcing member 125, provided with a cavity 136. As regards the cavities 126 and 136, these have a curvature substantially equal to a curvature of a cross-section of the second zone 152 of the intermediate component 15 in order to keep it in position while enabling it to slide.

Lastly, the casing comprises cut-outs 127 and 137 for the passage of the second zone 152 of the intermediate component 15 to keep it in position while enabling it to slide, cut-outs 128, 138 for the passage of the fluidic connection 52 of the connector 5, and cut-outs 129, 139 for the passage of the electrical connection 51 of the connector 5 surrounded by the plug protector 18.

Figure 17 provides a diagrammatic presentation of a device 100 according to an embodiment of the present invention.

The device 100 comprises at least one generator 101 and a catheter 1 according to the invention, for example as described above with reference to Figures 1 to 16.

Such a generator is described in detail in the document WO2011/148333 but its main characteristics are described here.

The generator 101 is a high pressure pulsed jet generator for generating fluid pulses under high pressure from at least one fluid contained in a reservoir here formed by a flexible bag 6, placed in a fluid-tight chamber 102, pressurized for example thanks to a cylinder 103 containing gas under pressure.

The chamber 102 here has at least one outlet for fluid 104, and an inlet 105 for gas under pressure.

To be pressurized, the generator 101 comprises a pressurization device for the chamber 102 which comprises a source of gas under pressure, for example here the cylinder 103 situated outside the chamber 102, which supplies a gas under pressure entering the chamber 102 by the inlet 105 for gas under pressure to increase the internal pressure of the chamber 102. A pressure regulating device 106 enables the pressure inside the chamber 102 to be regulated. For this, the pressure regulating device 106 is disposed at the inlet 105 for gas under pressure, just upstream, for example outside the chamber 102.

The generator 101 furthermore comprises a fluid circuit which comprises a bag 6 having an outlet for the fluid it contains, a joining connector 107, and a connection conduit 108 itself connected to the bag 6 by the joining connector 107. The joining connector 107, the connection conduit 108 as well as the bag 6 are disposed in the chamber 102.

The fluid circuit further comprises a hydraulic sequencer 109 the inlet of which is connected to at least the connection conduit 108, and the outlet of which is connected to an outlet conduit 110 connected the fluid outlet 104 of the chamber 102.

The hydraulic sequencer 109 comprises in particular:

- a flexible deformable envelope (not shown), formed in a hydraulic connection which connects the connection conduit 108 to the outlet conduit 110 inside the sequencer 109, all of this being exposed to the pressure inside the chamber 102,
- at least one hydraulic obturating valve (not shown) in the hydraulic connection, which may be situated upstream or downstream of the flexible deformable envelope, or even one upstream and another downstream,
- and a means (not shown) for actuating the various hydraulic obturating valves.

The outlet conduit 110 is in turn connected to an external connection conduit 112 for connection with the catheter 1.

To ensure sealing at the location of the outlet for fluid 104 of the chamber 102, the outlet for fluid 104 is preferably provided with a cone connector 111 for example of which a tapered part is preferably directed towards the outside of the chamber 102 such that the internal pressure of the chamber 102 tends to sink the cone further when the pressure increases.

In the present example embodiment, the hydraulic sequencer 109 with its associated actuating means are advantageously included in a replaceable and interchangeable cassette, here placed inside the chamber 102.

According to the present example embodiment, the generator 101 is adapted to generate a pulse of fluid at a pressure comprised between 2 and 30 bars, and with a volume of fluid per pulse comprised between 100 µL and 10 mL. For this, it is then preferable for the flexible deformable envelope to have a corresponding volume.

Of course, several bags 6 could be placed in the chamber 102 if necessary, all connected to the sequencer 109.

The catheter 1 thus firstly has a connection to the generator of high pressure jets 101 by the fluidic connection 52 of the connector 5. In the case of a dual function catheter as described above, the device 100 further comprises

an electricity generator 200 with which the catheter 1 then secondly has a connection, for example by a cable 201 connected to the electrical connection 51 of the connector 5. The electricity generator 200 is generally designated by the term "ESU".

Naturally, the present invention is not limited to the preceding description, but extends to any variant within the scope of the following claims.

* * *

2014246931 22 Jan 2019

CLAIMS:

1. A dual function catheter comprising:

- a conduit, wherein the conduit includes an inner sheath,
- a connector comprising a fluidic connection, an electrical connection, and an outlet connection, wherein a proximal end of the inner sheath is in fluid communication with the outlet connection, and wherein the connector couples the catheter to a fluid reservoir,
- an injection nozzle coupled to a distal end of the inner sheath,
- an electrode, and
- an outer sheath , surrounding the inner sheath, wherein the outer sheath is coupled to a sleeve, the sleeve and the outer sheath sliding relative to the inner sheath and adopting at least one pushed position in which the outer sheath covers at least a part of the injection nozzle and a pulled position in which the outer sheath exposes said part of the injection nozzle ,

wherein the injection nozzle is electrically conductive and forms the electrode such that the injection nozzle and the electrode are grouped together into a single component, wherein a distalmost end of the injection nozzle has a width greater than a width of said part of the injection nozzle that is selectively covered and exposed by sliding of the outer sheath, the width of the distalmost end blocking entry of the distalmost end into the outer sheath, and

- a tip ring at a distal end of the outer sheath and adapted to slide over said part of the injection nozzle, wherein the tip ring includes a passage for slidably receiving said part of the injection nozzle, the tip ring comprising:

a cylindrical proximal stem received in the outer sheath, the cylindrical proximal stem having a radially outer surface that engages a radially inner surface of the outer sheath, and

a distal head protruding distally from a distalmost end of the outer sheath, and radially outwardly from the cylindrical proximal stem.

2. A catheter according to claim 1, wherein the inner sheath is of PEBA.

3. A catheter according to any one of claims 1 or 2, wherein the outer sheath is of Teflon.

4. A catheter according to any one of claims 1 to 3, wherein the passage has a width less than a width of the distalmost end of the injection nozzle.

2014246931 22 Jan 2019

5. A catheter according to claim 4, wherein the tip ring comprises ceramic, and the distal head has a rounded shape formed by a surface having a first curvature along a radial direction and a second curvature along an axial direction.

6. A catheter according to any one of claims 1 to 5, wherein the injection nozzle comprises a channel enabling a fluid to be conveyed from the inner sheath to an outlet orifice at the distalmost end of the injection nozzle.

7. A catheter according to any one of claims 1, wherein the electrode is connected to the electrical connection by a conductive wire running in the inner sheath.

8. A device comprising a pulsed jet generator comprising a reservoir and a catheter, wherein the catheter is a catheter according to any one of claims 1 to 7 having firstly a connection to the pulsed jet generator by the fluidic connection of the connector , and wherein the catheter furthermore has secondly a connection to an electricity generator by the electrical connection of the connector.

9. A device according to claim 8, wherein the pulsed jet generator is for generating pressurized fluid pulses from at least one fluid contained in a flexible bag forming the reservoir placed in a pressurized fluid-tight chamber, the chamber having at least one outlet for fluids, the generator comprising:

- a pressurization device for the chamber which comprises a source of gas under pressure which supplies a gas under pressure entering the chamber to increase its internal pressure,
- a pressure regulating device which regulates the pressure inside the chamber,
- at least one joining connector for joining the flexible bag to a connection conduit, this joining connector and the connection conduit being disposed in the chamber,
- a hydraulic sequencer comprising at least:
  - an inlet into which enters at least the connection conduit and an outlet to which is connected an outlet conduit communicating hydraulically with the outside of the generator,
  - a flexible deformable envelope provided in a hydraulic connection, all of this being exposed to the pressure inside the chamber,
  - at least one hydraulic obturating valve in the hydraulic connection,
  - a means for actuating the hydraulic obturating valve,

2014246931 22 Jan 2019

- and the fluid-tight outlet conduit between the outlet of the sequencer and the outlet of the chamber connected to a conduit for external connection with the catheter.

10. A device according to any one of claims 8 or 9, wherein the generator comprises an on-off solenoid valve situated in the pressurized chamber, generating a pulse of fluid at a pressure comprised between 2 and 30 bars.

11. A device according to any one of claims 8 to 10, wherein the flexible deformable envelope has a volume of fluid per pulse comprised between 100 μL and 10 ml.

12. A catheter according to any one of claims 1 to 7, wherein a distalmost end of the injection nozzle is electrically conductive.

13. A catheter according to any one of claims 1 to 7, wherein a distal-facing surface of the distalmost end of the injection nozzle is planar and extends perpendicular to a central longitudinal axis of the injection nozzle.

Boston Scientific Limited

Patent Attorneys for the Applicant/Nominated Person

SPRUSON & FERGUSON

Fig. 1

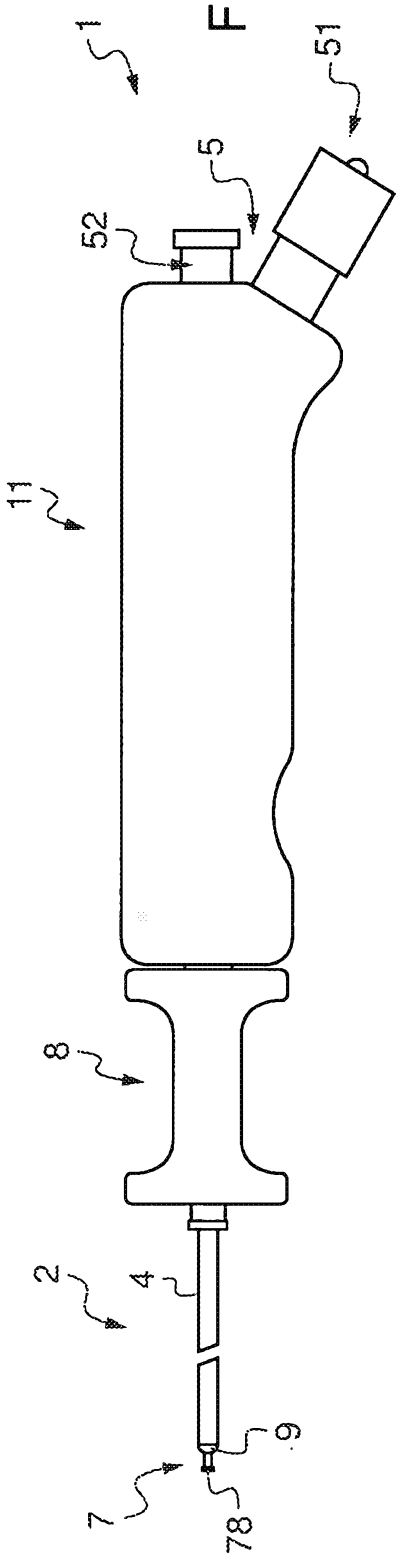

Fig. 2

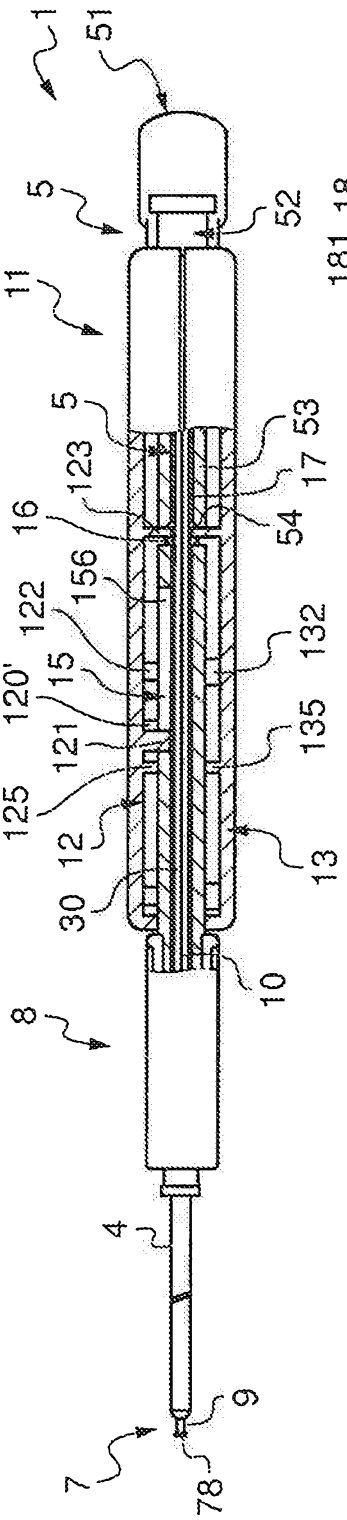

Fig. 3

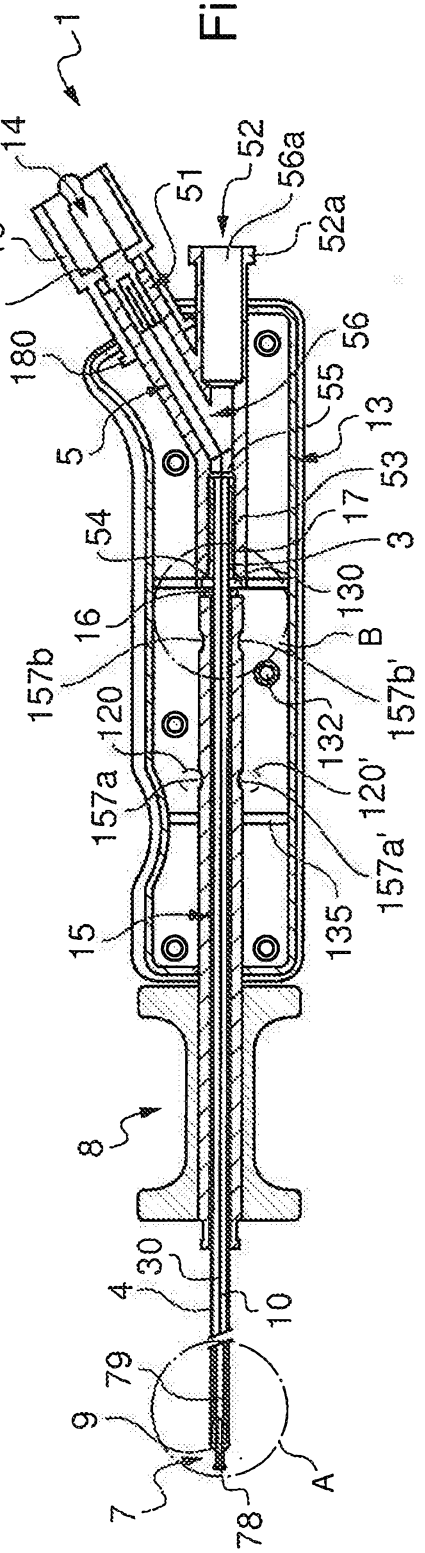

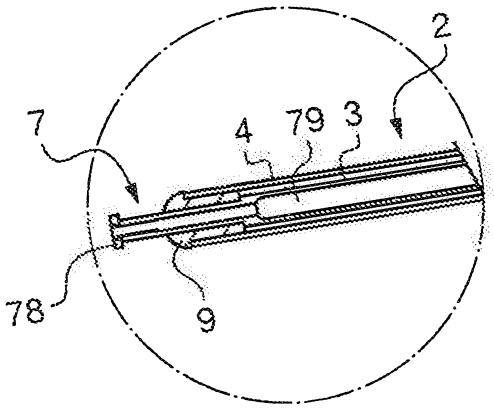
7
2
4
79
3
78
9

A

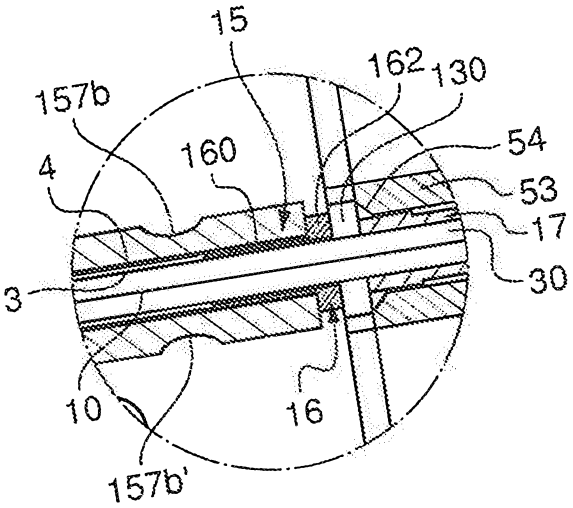
15
162
130
157b
160
54
4
53
17
3
30
10
16
157b'

B

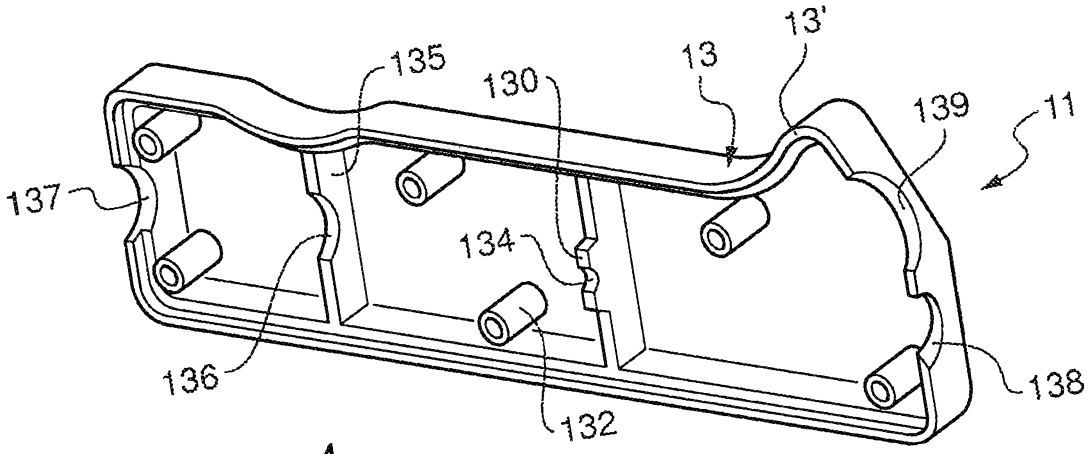
13'
135
130
13
139
11
137
134
136
132
138

Fig. 4

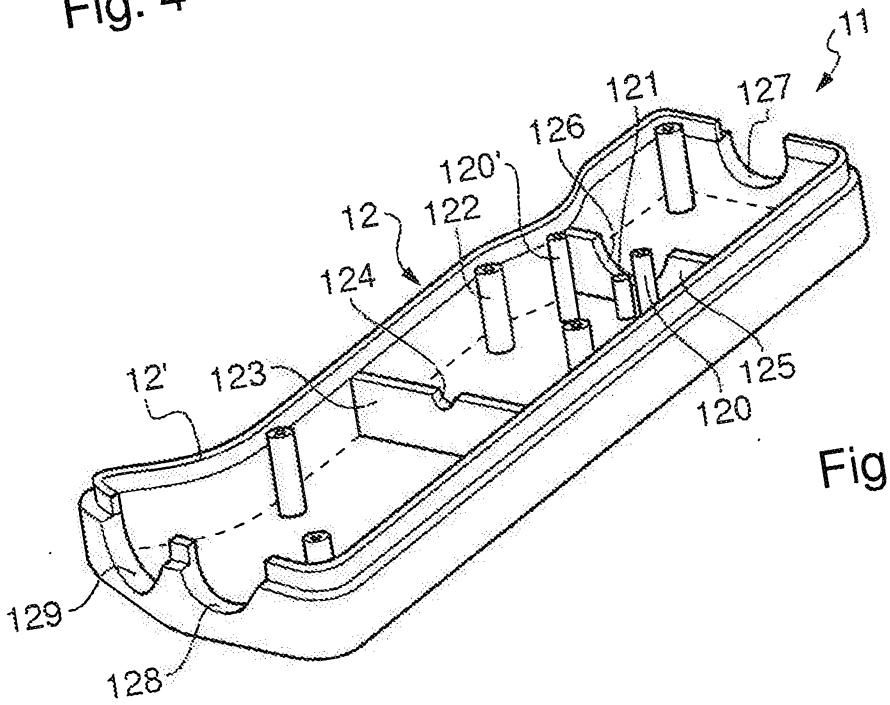
11
121
127
126
120'
12
122
124
12'
123
125
120
129
128

Fig. 5

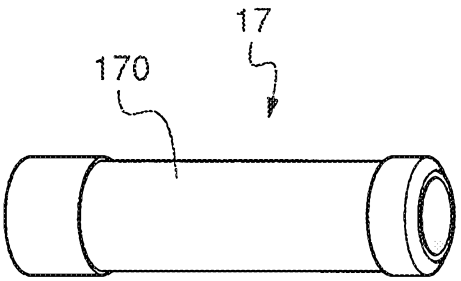

Fig. 6

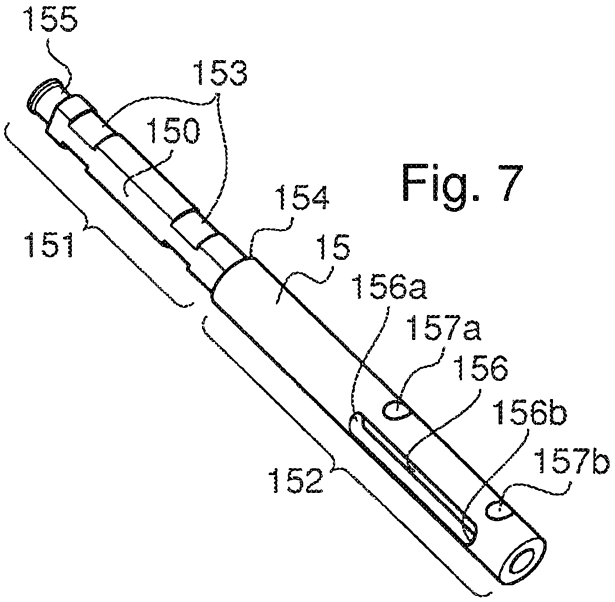

Fig. 7

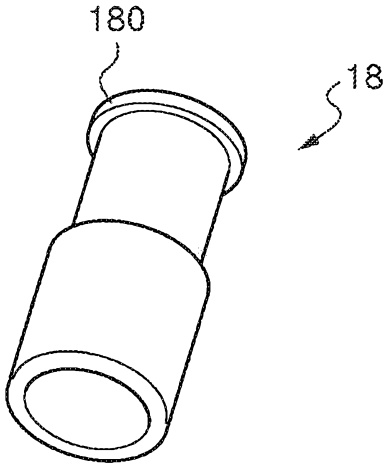

Fig. 8

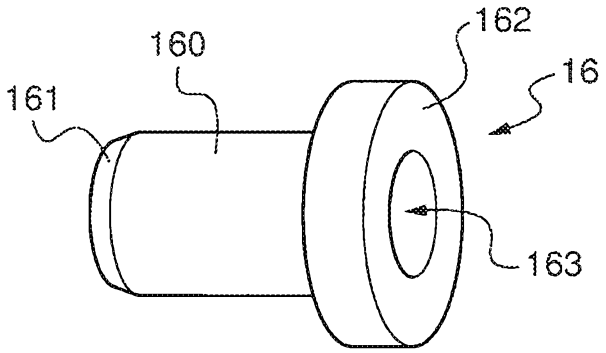

Fig. 9

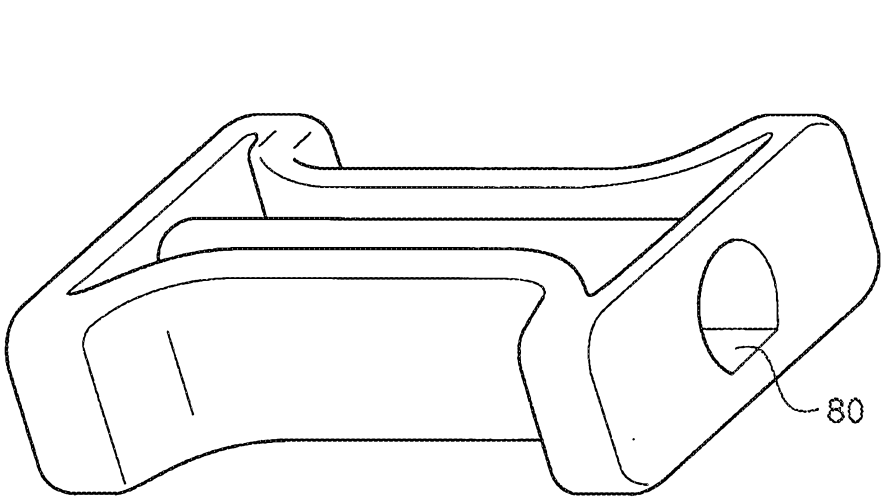

Fig. 10

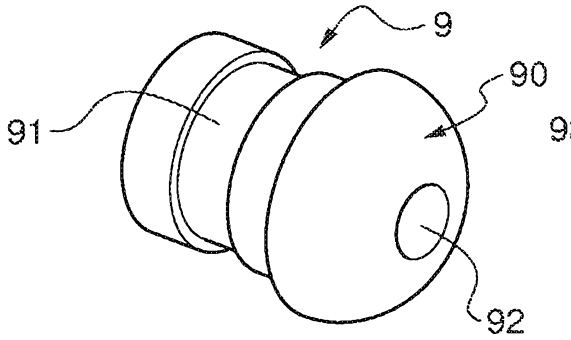

Fig. 11A

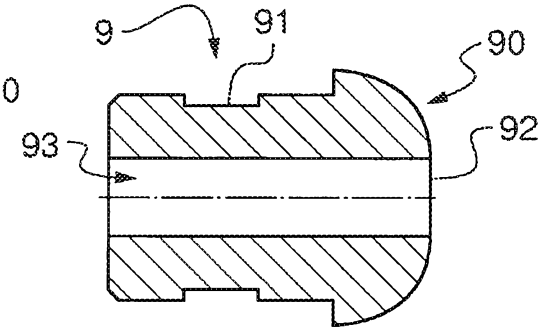

Fig. 11B

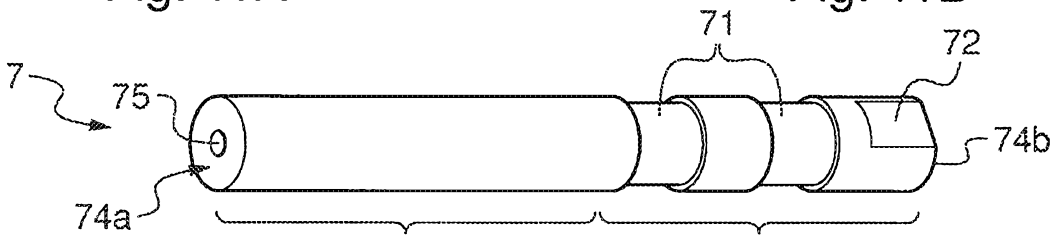

Fig. 12

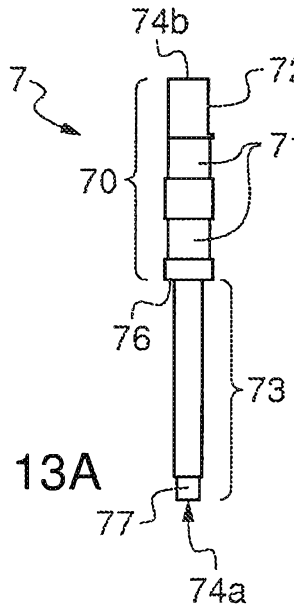

Fig. 13A

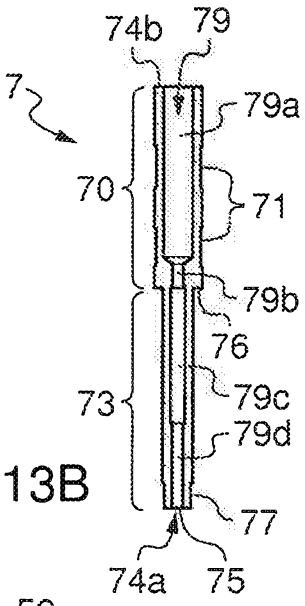

Fig. 13B

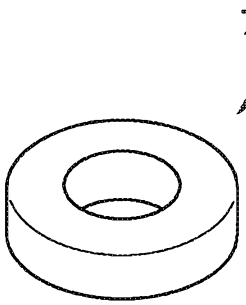

Fig. 14

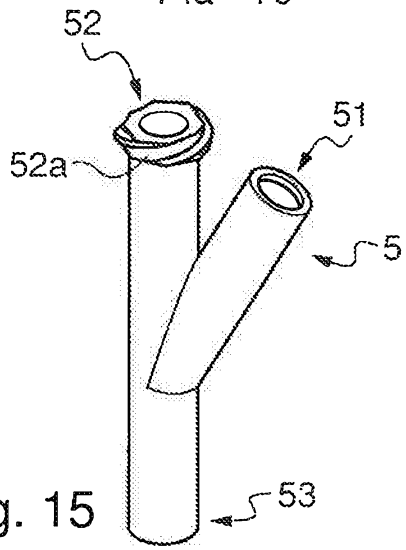

Fig. 15

Fig. 16

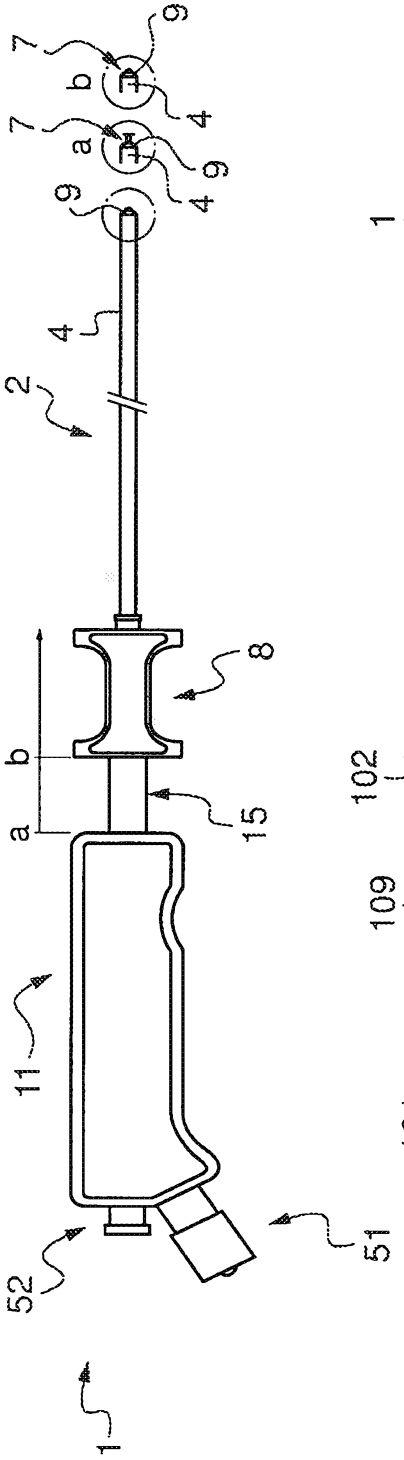
1
2
4
7
9
a
b
8
15
11
51
52

Fig. 17

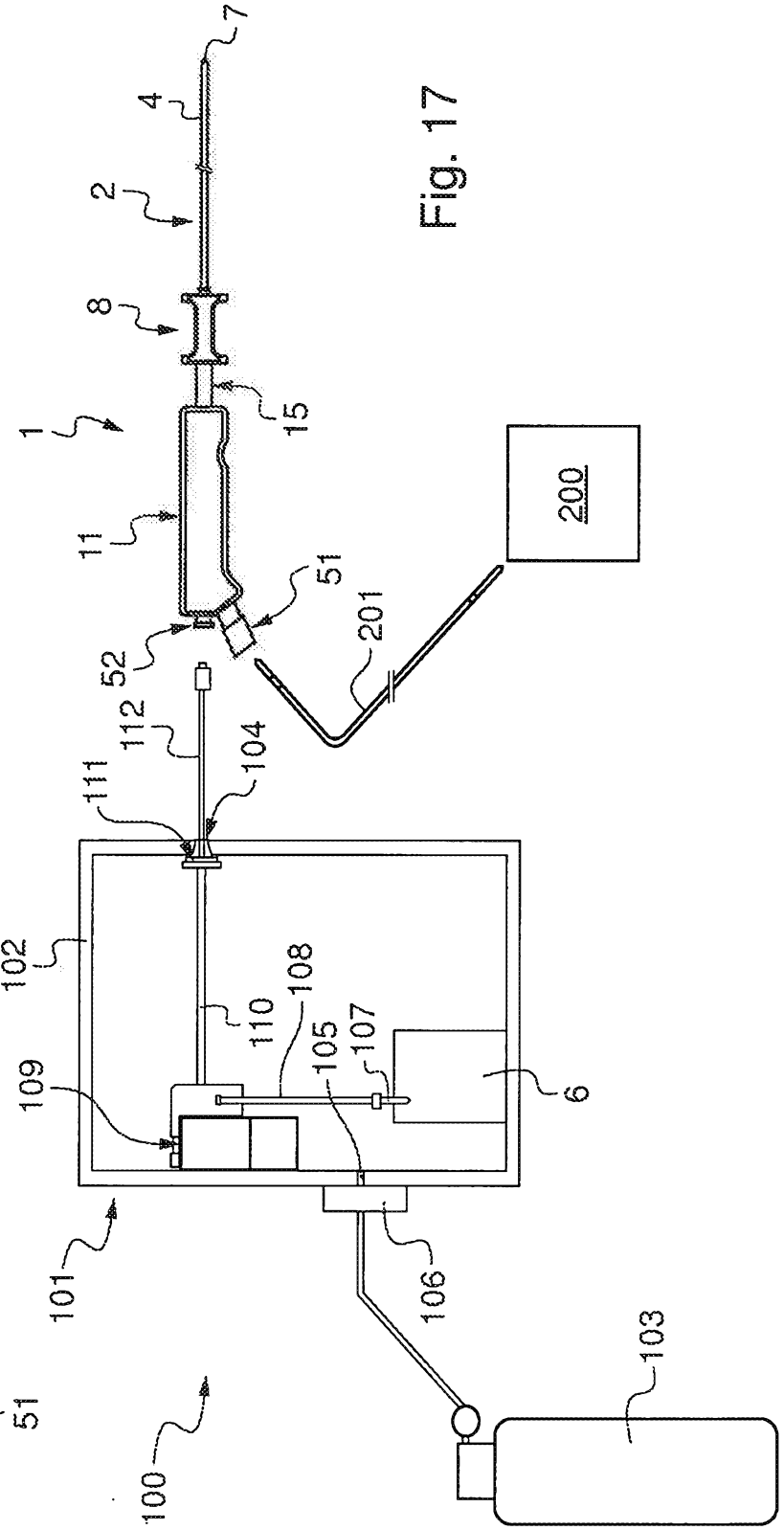
100
101
102
103
104
105
106
107
108
109
110
111
112
200
201
1
2
4
6
7
8
11
15
51
52