Oct. 14, 1969 S. E. ROBINSON 3,473,016

LIGHTING FIXTURES

Filed Jan. 18, 1967 7 Sheets-Sheet 1

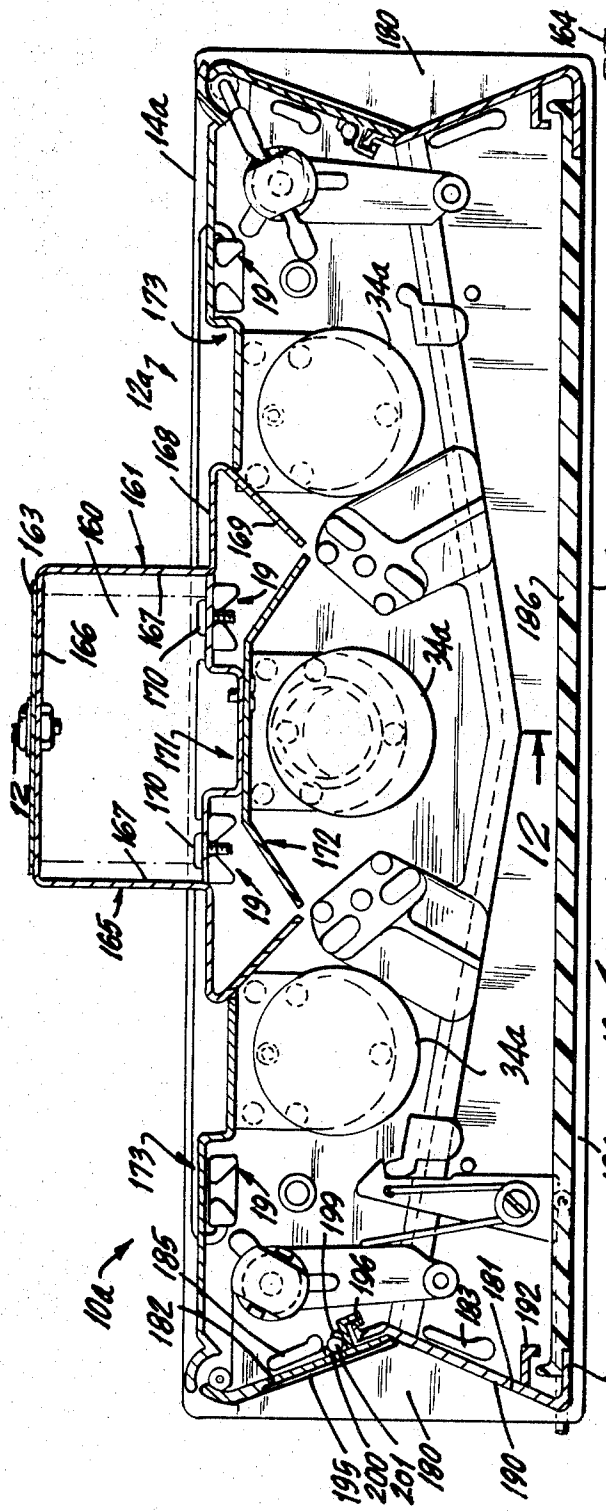

FIG. 11

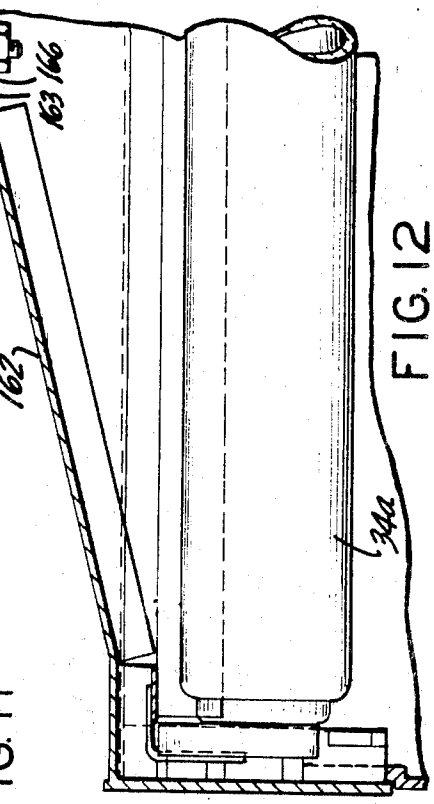

FIG. 12

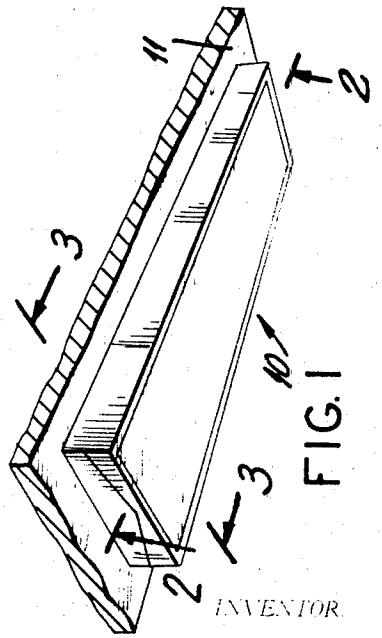

FIG. 1

INVENTOR
STUART E. ROBINSON
BY
J. B. Feldhim
ATTORNEY

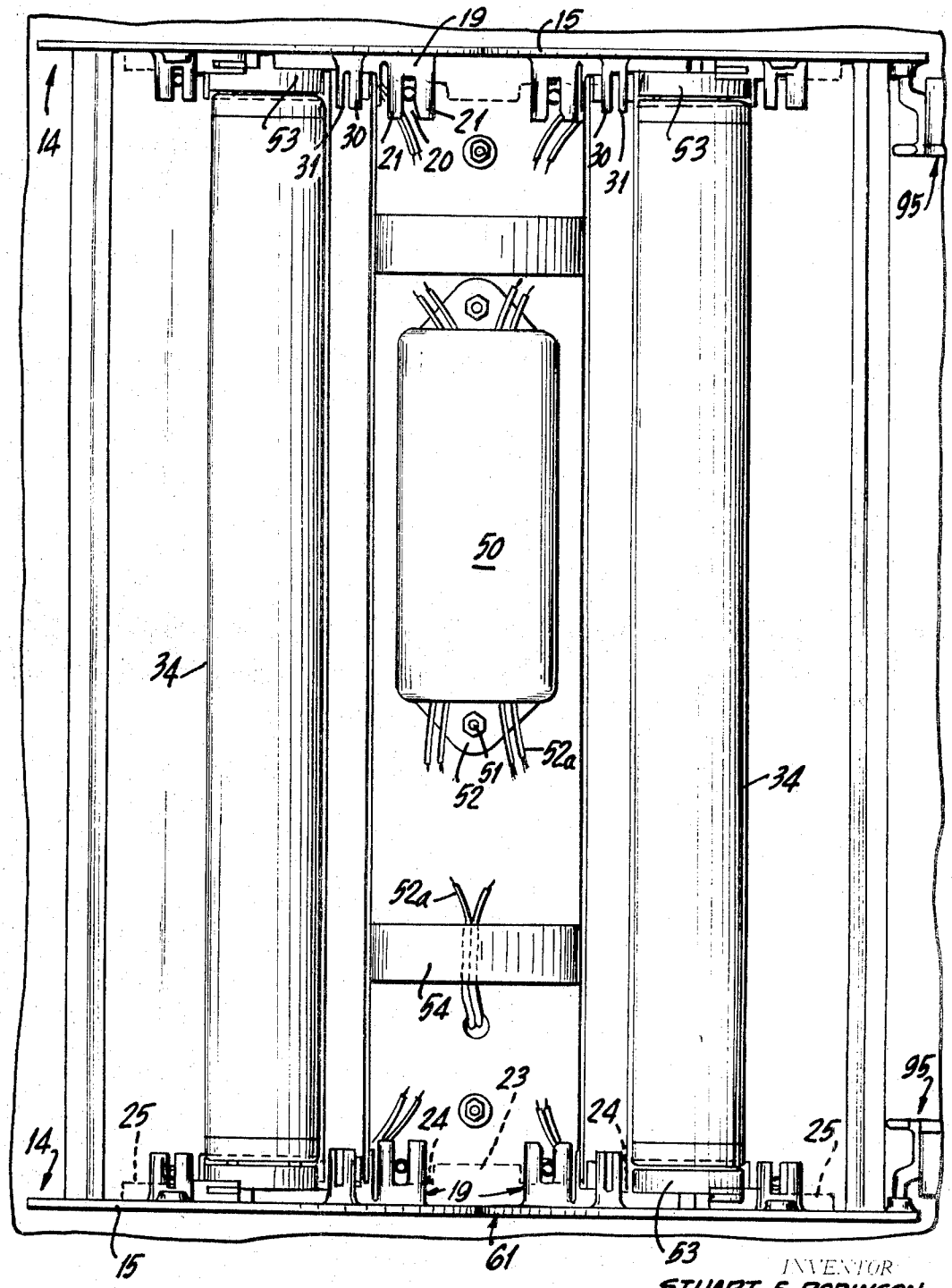

FIG. 2

INVENTOR
STUART E. ROBINSON
BY
J. B. Felshin
ATTORNEY.

Oct. 14, 1969 S. E. ROBINSON 3,473,016

LIGHTING FIXTURES

Filed Jan. 18, 1967 7 Sheets-Sheet 3

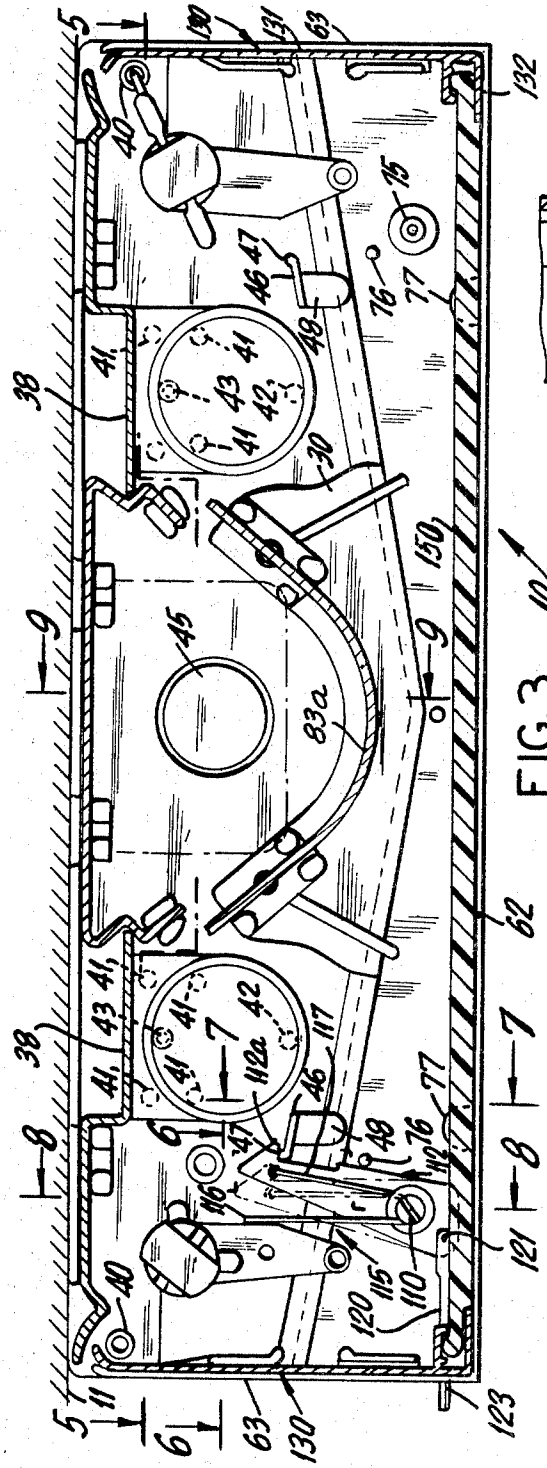

FIG. 3

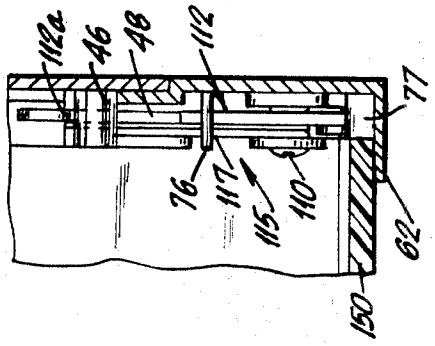

FIG. 7

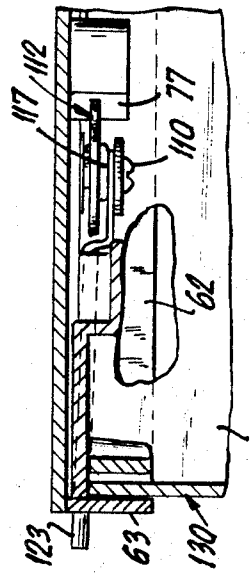

FIG. 6

STUART E. ROBINSON

BY

J. B. Feldlin

ATTORNEY.

Oct. 14, 1969 S. E. ROBINSON 3,473,016

LIGHTING FIXTURES

Filed Jan. 18, 1967 7 Sheets-Sheet 4

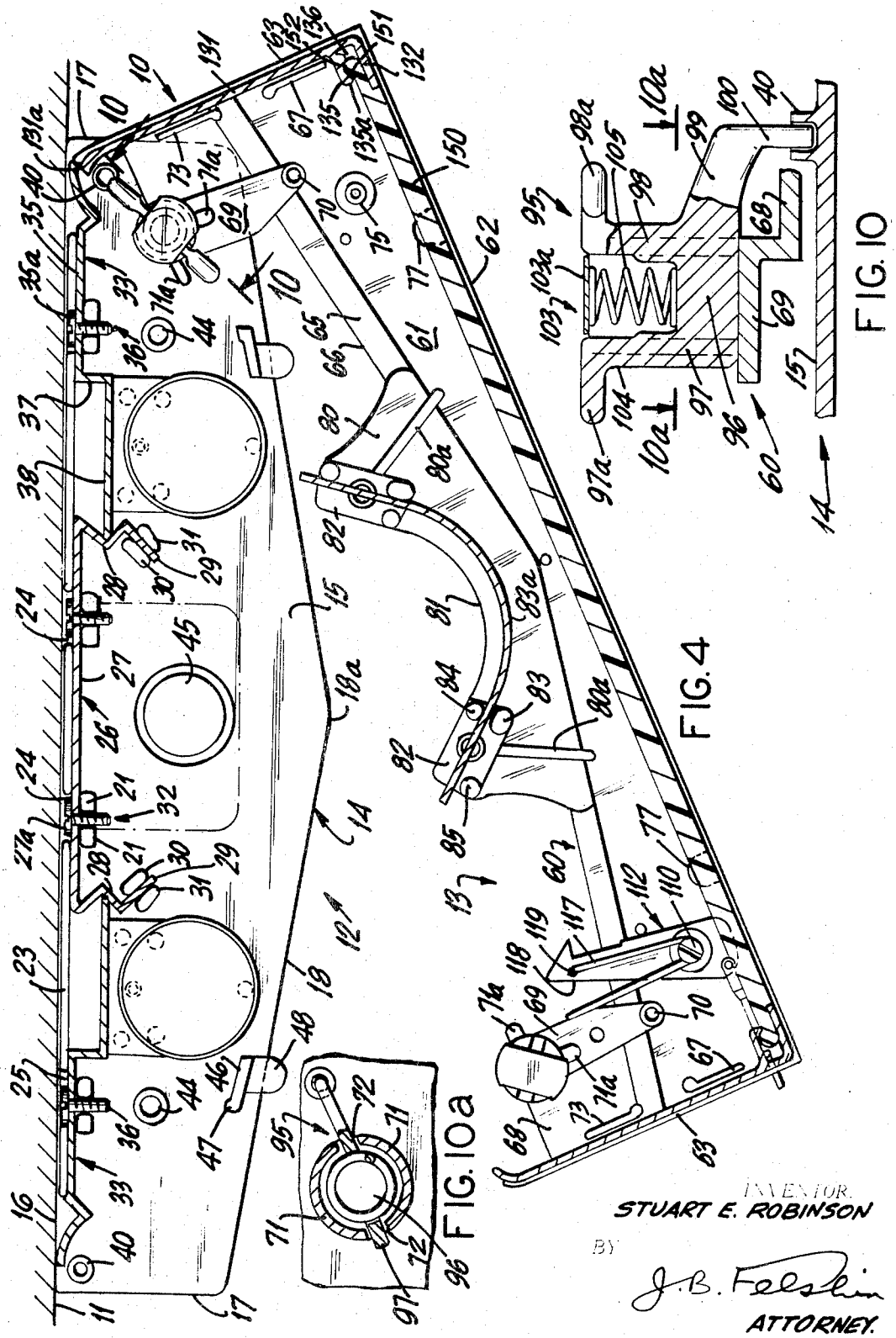

FIG. 4

FIG. 10

FIG. 10a

INVENTOR.
STUART E. ROBINSON

BY

J. B. Felsheim

ATTORNEY.

Oct. 14, 1969 S. E. ROBINSON 3,473,016

LIGHTING FIXTURES

Filed Jan. 18, 1967 7 Sheets-Sheet 5

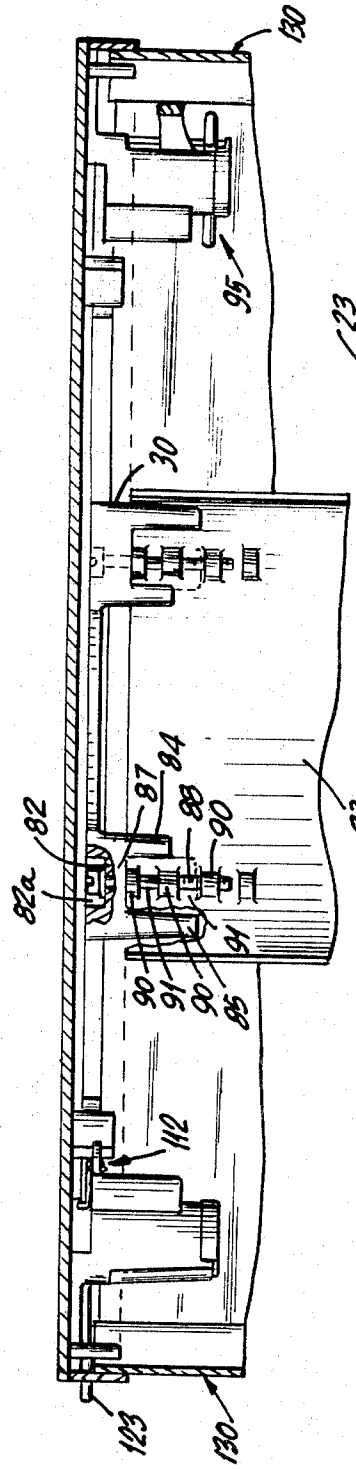

FIG. 5

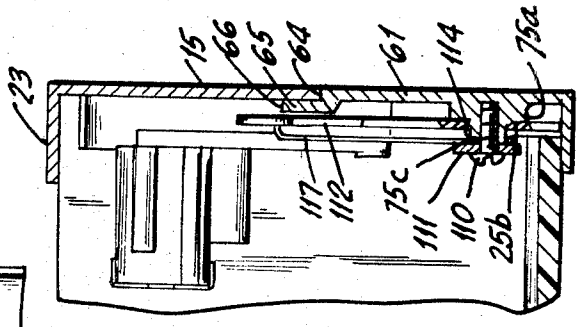

FIG. 8

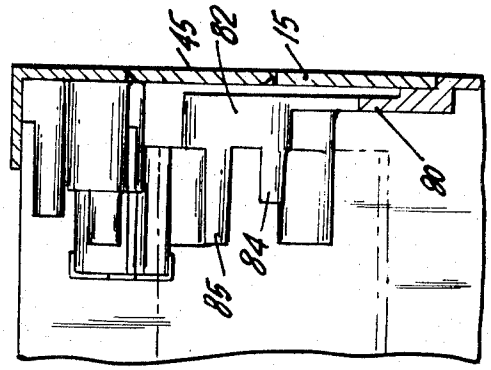

FIG. 9

INVENTOR
STUART E. ROBINSON

BY
J. B. Franklin
ATTORNEY.

Oct. 14, 1969 S. E. ROBINSON 3,473,016

LIGHTING FIXTURES

Filed Jan. 18, 1967 7 Sheets-Sheet 6

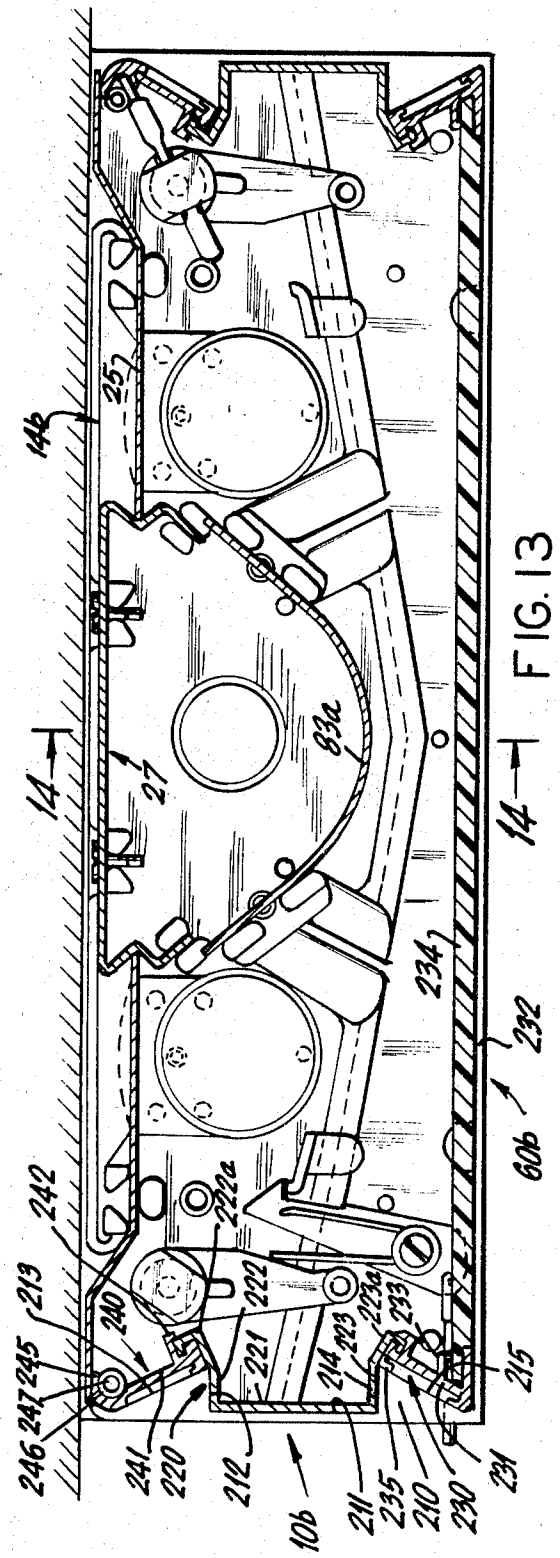

FIG. 13

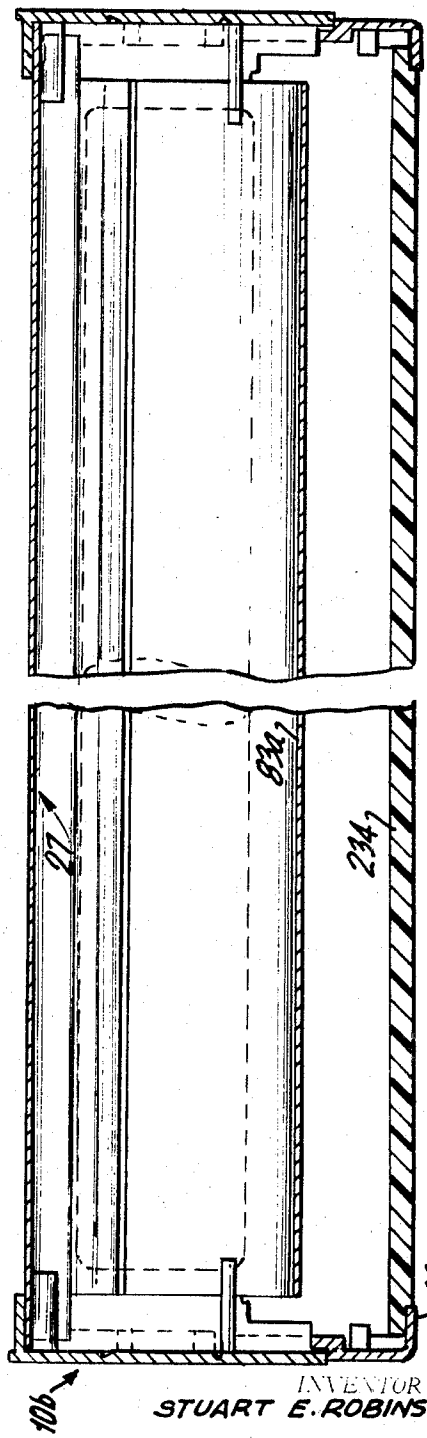

FIG. 14

INVENTOR
STUART E. ROBINSON

BY

J. B. Felshin

ATTORNEY

Oct. 14, 1969 S. E. ROBINSON 3,473,016

LIGHTING FIXTURES

Filed Jan. 18, 1967 7 Sheets-Sheet

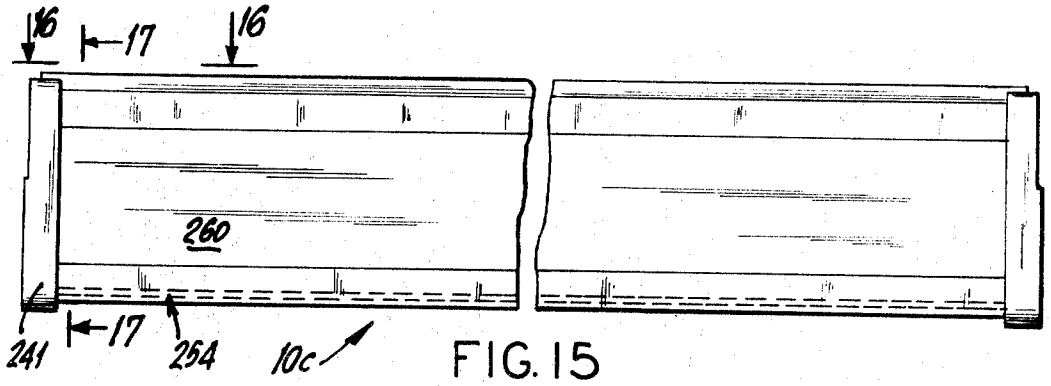

FIG. 15

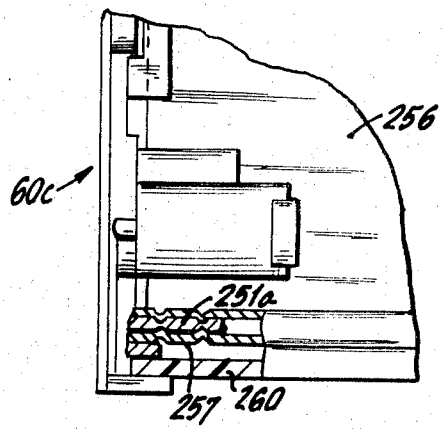

FIG. 16

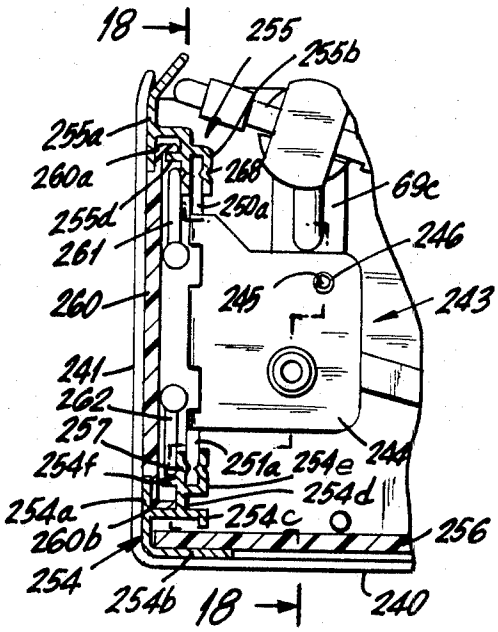

FIG. 17

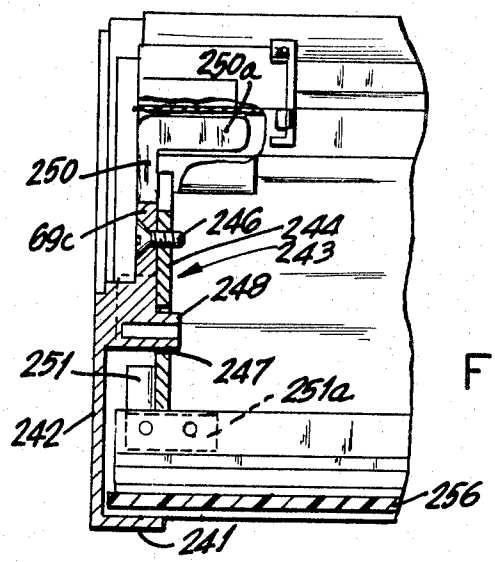

FIG. 18

INVENTOR
STUART E. ROBINSON

BY

J. B. Feeblin

ATTORNEY

United States Patent Office 3,473,016 Patented Oct. 14, 1969

3,473,016

LIGHTING FIXTURES

Stuart E. Robinson, Baldwin, N.Y., assignor to Kenbert Lighting Industries, Inc., New York, N.Y., a corporation of New York

Filed Jan. 18, 1967, Ser. No. 610,122
Int. Cl. H05b 33/02
U.S. Cl. 240—51.11 28 Claims

ABSTRACT OF THE DISCLOSURE

A lighting fixture having an upper section for mounting the fluorescent lamps and a lower section for mounting the light diffusing panel. The lower section is releasably hinged to the underside of the upper section and a releasable latch is provided to retain the sections in closed condition. Upon release of the latch, the lower section may be swung down relative to the upper section and upon release of the releasable hinge, the lower section may be entirely separated from the upper section.

This invention relates to lighting fixtures.

An object of this invention is to provide a ceiling lighting fixture of the character described comprising a top section carrying lamps, to which a lower section carrying light diffusing means is removably hinged adjacent the ceiling line, said lower section being held in closed position against the top housing section by a releasable latch which when released allows said lower section to be swung down to allow easy access to the interior of both sections.

Another object of this invention is to provide a lighting fixture of the character described in which the lower section can be easily removed, from the top housing section, once the lower section has been unlatched and swung down with respect to the top section.

Yet another object of this invention is to provide a fixture of the character described in which the hinge for the lower section is so constructed as to provide removability of the lower section at the hinge.

Still another object of this invention is to provide a fixture of the character described in which the lower section can be easily removed and another one snapped in its place.

A further object of this invention is to provide a fixture of the character described in which the top section comprises a pair of end members, interconnected by top cover plates for the lamps, and in which the lower housing section comprises interconnected end members, and said end members of the lower section carrying decorative panel means or light diffusers.

A still further object of this invention is to provide a fixture of the character described in which said decorative panel and diffuser means may comprise interchangeable bottom and side panels on the lower section.

Yet a further object of this invention is to provide a fixture of the character described in which the end members of said top and lower housing sections, interfit, and in which each pair of end members may be identical so that either one of the pair may be used at either end.

Yet another object of this invention is to provide a strong and durable lighting fixture of the character described which is relatively inexpensive to manufacture, easy to assemble and mount and which shall yet be attractive in appearance and practical and efficient to a high degree.

Other objects of this invention will in part be obvious and in part hereinafter pointed out.

The invention accordingly consists in the features of construction, combinations of elements, and arrangement

of parts which will be exemplified in the construction hereinafter described, and of which the scope of invention will be indicated in the following claims.

In the accompanying drawing, in which are shown various illustrative embodiments of this invention,

FIG. 1 is a bottom perspective view of a lighting fixture embodying the invention;

FIG. 2 is a cross-sectional view taken on line **2—2** of FIG. 1;

FIG. 3 is a cross-sectional view taken on line **3—3** of FIG. 1;

FIG. 4 is a transverse cross-sectional view of the fixture of FIG. 1, with the lower casing section partially swung open;

FIG. 5 is a cross-sectional view taken on line **5—5** of FIG. 3;

FIG. 6 is a cross-sectional view taken on line **6—6** of FIG. 3;

FIG. 7 is a cross-sectional view taken on line **7—7** of FIG. 3;

FIG. 8 is a cross-sectional view taken on line **8—8** of FIG. 3;

FIG. 9 is a cross-sectional view taken on line **9—9** of FIG. 3;

FIG. 10 is a cross-sectional view taken on line **10—10** of FIG. 4;

FIG. 10*a* is a cross-sectional view taken on line **10*a*—10*a*** of FIG. 10;

FIG. 11 is a cross-sectional view similar to FIG. 3, but illustrating a three lamp construction with modified casing construction;

FIG. 12 is a partial cross-sectional view taken on line **12—12** of FIG. 11;

FIG. 13 is a cross-sectional view similar to FIG. 3 but illustrating a further modified construction of the casing;

FIG. 14 is a cross-sectional view taken on line **14—14** of FIG. 13;

FIG. 15 is a side elevational view of a lighting fixture embodying a still further modified construction;

FIG 16 is a top view in the plane of lines **16—16** of FIG. 15, with parts broken away and in cross-section;

FIG. 17 is a cross-sectional view taken on line **17—17** of FIG. 15; and

FIG. 18 is a cross-sectional view taken on line **18—18** of FIG. 17.

Referring now in detail to the drawing, **10** designates a ceiling lighting fixture embodying the invention attached to a ceiling **11**. Said fixture **10** comprises a top section **12** to which a lower section **13** is removably hinged by means hereinafter described.

The top section **12** comprises a pair of end plates or members **14** which may be cast or molded from the same die or mold. End plates **14** each comprises a flat end wall **15** having a top horizontal edge **16** contacting the ceiling **11** and end edges **17** from which extend downwardly converging edges **18** meeting at a central apex **18*a***. Integrally formed with each side wall **15** are four spaced horizontal inwardly extending lugs **19** each formed with a slot **20** to provide a pair of fingers **21**. The four lugs **19** are arranged symmetrically relative to a vertical plane through the apex **18** and at right angles to wall **15**. Each end plate **14** is symmetrical relative to such a plane, so that the plates can be used for either end of the fixture.

Extending inwardly from wall **15** is a horizontal ledge **23** disposed just above lugs **19** and at top edge **16**, and formed with a pair of inner notches **24** and a pair of outer notches **24**, to expose slots **20** and fingers **21** of lugs **19**.

Resting on the inner lugs **19**, is a longitudinal ballast cover member **26** having a top wall **27** from which project

downwardly zig-zag shaped walls **28** including downwardly converging flanges **29** reclined between downwardly converging pairs of lugs **30**, **31** projecting inwardly from wall **15**. Top wall **27** is formed with openings **27***a* through which extend headed screws **32**, the shanks of which cut screw grooves at the inner sides of fingers **21**, to attach cover **26** to the end plates **14** and thereby interconnect said plates.

Cover plates **33** for fluorescent lamps **34**, have top wall portions **35** resting on the outer lugs **19** and formed with openings **35***a* to receive screw shanks of headed screws **36** which cut screw grooves in the inner sides of fingers **21** of said lugs.

Extending down from top wall portions **35** are intermediate wall portions **37** from the lower ends of which extend inwardly, wall portions **38** projecting to the zig-zag shaped walls **28** of cover **26**. Said covers **33** thus also serve to interconnect the end plates **14**.

Integrally formed with each plate **14** adjacent each end edge **17** and close to top edge **16**, is a cylindrical socket or bearing **40** for the purpose hereinafter appearing.

Also projecting inwardly from each wall **15** on the outer side of each pair of lugs **30**, **31**, are four pins **41** arranged in corners of a rectangle and a pin **42** spaced centrally therebelow. Centrally of the pins **41** is a socketed tube **43**.

The fluorescent lamps **34** are mounted on and between pins **41**, **42**, **43** in the usual manner.

Side knock outs **44** are cast with plates **14**, as well as a central knock out **45**. The knock outs **44** may be knocked out for use in continuous run mounting for alignment by insertion of screws and nuts. The knock out **45** may be knocked out for electrical connection with nipple protective device.

Also integrally formed with each wall **15** are keeper ribs **46** located parallel to edges **18** and spaced therefrom. Each rib **46** has an upturned keeper lip **47** at its outer end. Integrally formed with ribs **46** are downwardly extending tongues **48** parallelly spaced from wall **15** and extending below edges **18**.

The usual ballast **50** is attached to the underside of wall **27** of cover **26** by means of bolts **51** extending through ears **52** on the ballast.

Wiring **52***a* from the ballast and adaptors or end sockets **53** for the lamps **34** may be held against wall **27** by spring strips **54**, the ends of which catch in zig-zag wall portions **28**. Members **53** may be attached to end plates **14** by screws **53***a* passing through tubes **43** integrally formed with said end plates.

The bottom section **13** of the casing comprises a pair of end members **60** interconnected to each other and interfitting with end members **14**, in the manner hereinafter appearing. Said members **60** are also identical, being made from the same die or mold and are symmetrical about a vertical plane at right angles therethrough at the middle thereof. With such construction each member **60** may be used for either end of the lower section **13** of the fixture **10**.

Each member **60** comprises an outer vertical wall **61** from the lower end of which extends inwardly a bottom flange **62** and from the sides of which extend inwardly, side flanges **63**. When members **14**, **60** are closed together, walls **15** are in the plane of walls **61**. Wall **61** is formed with outer downwardly converging shoulders **64** against which edges **18** rest when the fixture is closed. Extending inwardly and upwardly from wall **61** is a flange or lip **65** engaging the inner side of the lower edge portions of wall **15**. Said flanges **65** have downwardly converging upper edges **66** parallel to shoulders **64**.

Integrally formed with wall **61** are a pair of ribs **67** extending inwardly of said wall in spaced parallel relationship to flanges **63**.

Integrally formed with flange **65** and offset somewhat inwardly therefrom are vertical walls **68** extending to flanges **63** which rise above wall **61**. Offset inwardly from each wall **68** is a vertical wall **69** which projects down below flange **65** and has at its lower end a socket **70**. Extending inwardly from the upper end of each wall **69** are a pair of opposed, similar, part-circular portions **71** forming diametrically opposed slots **72** therebetween. Strengthening ribs **71***a* may extend from said part-circular portions **71**. Extending inwardly from each wall **68** is a rib **73** parallel to flange **63** and in alignment with rib **67**.

Wall **61** is also provided with integral sockets **75** disposed below sockets **70** and spaced inwardly therefrom, and with pins **76** disposed below flange **65** and inwardly of sockets **75**, in a direction toward the middle of member **60**. Integrally formed with wall **60** are a pair of spacing boses **77** extending up from bottom flange **62**.

Integrally formed with flange **65** is a central upwardly extending wall **80** offset inwardly from said flange and projecting above said flange.

Wall **80** has a curved upper edge **81**. At the end of the curved edge **81** are thickened bosses **82** from which project inwardly a pair of spaced lugs **83**, **84** and another lug **85** spaced from lug **84** and aligned therewith on an inclined line. Strengthening ribs **80***a* may extend from the inner surface of wall **80** to the bosses **82**.

An undercover **83***a* for the ballast, of curved transverse cross-section has upwardly inclined sides **84** passing between spaced lugs **83**, **84** and resting on lugs **85**. Bosses **82** are hollow at their outer sides, as shown at **82***a*. Said bosses are formed with openings **87**. Screws **88** have heads **89** within the hollow bosses, and shanks passing through openings **87**. The shanks of said screws engage alternately oppositely pressed, semi-circular portions **90**, **91** of plate **83***a* and cut threaded grooves therein for attaching said plate to said members **60** to interconnect said members.

Said plate underlies the ballast **50** as shown in the drawing.

Means is provided to releasably hinge plates **14** to members **60**. To this end there is assembled with one of the pair of opposed curved walls **71**, a releasable hinge member **95** (FIGS. 10, 10*a*). Member **95** comprises a hub portion **96** disposed between said curved walls **71**. Extending from hub **96** is a rib **97** slidable in one slot **72**, and a rib **98** slidable in the other slot **72**. Hub **96** rests in wall **69**. Extending from the inner ends of ribs **97**, **98** are radial handles **97***a*, **98***a*. Extending from rib **98** is an arm **99** from which extends outwardly a horizontal pin **100** projecting into socket **40** of member **14**. Fitted over the outer edges of curved walls **71** is a Tinnerman fitting **103** which has a top wall **103***a* parallel to hub **96**, and from which top wall there extends part cylindrical walls **104** extending down over the outer surfaces of said curved walls **71**. Walls **104** carry prongs which dig into the walls **71** to hold the fitting **103** in place. Between hub **96** and top wall **103***a* is placed a coil compression spring **105**.

Thus member **60** may be swung down to pivot about the axis of pin **100**. However, by engaging handles **97***a*, **98***a* and moving members **95** simultaneously away from walls **69** (or inwardly toward each other), pins **100** will come out of sockets **40** so as to disconnect and separate the upper and lower sections of the fixture.

Means is provided to releasably latch said sections **12**, **13** in closed condition.

It will be noted that hinges **95** are applied only to the sides of the fixture where the hinge is to be located. Screwed into sockets **75** at opposite sides of the fixture, are screws **110** (FIG. 8). The sockets **75** each comprises a base hub **75***a* having an outer annular shoulder **75***b* and from which hub **75***c* extends. A washer **111** is held against hub **75***c* by the head of screw **110**. Rotatably mounted on hub **75***c* is a latch **112**. Latch **112** projects up above edge **66** and has a hooked upper end **112***a* adapted to engage over keeper lip **47** on rib **46**. On hub **75** is a coil portion **114** of a torsion spring **115**. Said spring has an arm **116** engaging the inner side of thickened rib **69**, and a second arm **117** having a finger **118** passing into a hole **119** in said latch. Spring **115** thus

tends to urge the latch into latching engagement with lip 47.

Pin 76 contacts one edge of latch 112 to limit its rotation by spring 115 in one direction. Latch 112 may be retracted to release lip 47 by means of a rod 120 hinged to latch 112 at a side thereof opposite the side which latches, as at 121. Thus latch 112 is a lever with a latching arm on one side of its rotary axis and a releasable arm on the other side of said axis. Rod 120 passes through an opening 123 in flange 63. By pressing on both rods 120 simultaneously, both the latches are released at the same time, and the lower fixture section 13 will swing down. Thereafter members 95 may be retracted to entirely remove the lower section 13 from the upper section 12.

Side panels 130 may be mounted on the members 60 of the lower section 12. Panel 130 may be made of aluminum or plastic. Each comprises a side wall 131 from the lower end of which extends a flange 132. The ends of wall 131 fit between ribs 67, 73 and side flanges 63. Flanges 132 rest on the ends of flange 62. Extending from each side wall 131 is a flange 135 disposed parallel to and above flange 132 and forming a channel 136 therewith. At the inner edges of flanges 135 are downwardly extending lips 135*a*. At the upper end of each side wall 131 is an inwardly curved lip 131*a* disposed about socket 40.

A bottom diffusing and/or decorative panel 150 rests on flanges 62 and has upwardly recessed side flanges 151 projecting into channels 136. Flanges 151 have upwardly turned end beads 152 engaging lips 135*a* of flanges 135. The ends of panel 150 contact the spacing hubs 77. It will now be understood that the side plates 130 and diffuser panel 150 may be replaced and interchanged to suit decorative requirements.

When the casing is closed, tongues 48 engage the inner surfaces of flanges 65 to help align sections 12, 13.

The top cover members 25, 26 are attached to the ceiling in any suitable manner (not shown).

In FIGS. 11 and 12 there is shown a lighting fixture 10*a* similar to the fixture 10, except for differences hereinafter noted. Fixture 10*a* has three fluorescent lamps 34*a* instead of two lamps 34, as in fixture 10. Hence the pins 41, 42 are repeated at the middle of the end plates 14*a* for the upper fixture section 12*a*. End members or plates 14*a*, 60*a* of sections 12*a*, 13*a*, are similar to end plates 14, 60 of sections 12, 13 except as described hereinafter.

The releasable hinge means and the latch means for both fixtures 10 and 10*a* are identical. In fixture 10*a*, however, the lower cover plate 83*a* is not used so that light from the center lamp 34*a* may go down. Also, in fixture 10*a*, the ballast 160 is placed above the upper section, in a casing 161 that has upwardly and inwardly inclined wall portions 162 and a center top wall portion 163. Attached to the underside of top wall 163 as by bolts 164 is a center casing section 165 having a top wall 166 from the sides of which extend downwardly, side walls 167. Extending outwardly from the lower ends of side walls 167 are horizontal walls 168 located substantially in the plane of the tops of end plates 14*a*. Flanges 169 converge downwardly from the outer ends of walls 168.

Attached to a pair of center lugs 19 by screws 170, is a top cover plate 171 to the underside of which is fixed a cover 172 for the center lamp 34*a*.

A pair of cover plates 173 are attached to the outer lugs 19, by screws and these cover the outer two lamps 34*a*.

End plates or members 60*a* of the lower section 13*a* of fixture 10*a*, have triangular shaped thickened inwardly extending portions 180. Said portions 180 have angular edges 181, 182. End plates 60*a* have ribs 183 parallel to edges 181. The lower ends of triangular thickened portions 180 merge with a bottom flange 184 similar to flange 62. End plates 60*a* also are formed with ribs 185 parallel to edges 182. A bottom diffusing plate 186, which may be similar to diffusing plate 150, rests on flanges 184.

Mounted between end plates 60*a*, at the sides of the fixture, are decorative and/or diffusing panels or plates 190. The ends of plates 190 are received between ribs 183 and edges 181. At the lower ends of plates 190 are flanges 191 resting on flanges 184. Extending from plates 190 are flanges 192 extending inwardly, above plate 186.

Side plates 195 have their ends received between ribs 155 and edges 182. Plates 195 (as well as plates 190) may be made of plastic or metal or other suitable material and may have decorative as well as light diffusing properties.

Plates 195 have inwardly opening channels 196 receiving a lip 197 on plate 190. Also plate 195 may have lips 199, 200 forming part-circular openings to receive horizontal screws 201 for attaching the end plates 60*a* together.

In FIGS. 13, 14 there is shown a lighting fixture 10*b* similar to fixtures 10, 10*a*, except as hereinafter described. Fixture 10*b* may be a two lamp fixture, same as fixture 10, with similar releasable hinge and latching means. Fixture 10*b* differs in the design of its sides, as shown in FIGS. 13, 14. In fixture 10*b*, the lower section has end plates 60*b* which differ from end plates 60*a* of fixture 10*a* in that the triangular raised portitons 180 are replaced by raised portions 210 having intermediate vertical inner edges 211 from the upper ends of which extend horizontal under-edges 212. From the ends of edges 212 extend outwardly and upwardly inclined edges 213. Extending from the lower ends of edges 211 are horizontal edges 214, from the outer ends of which extend downwardly and outwardly, inclined edges 215.

At the sides of the fixture 10*b* are side panels 220 having vertical wall portions 221 contacting inner edges 211. Extending from wall portions 221 are portions 222, 223 contacting edges 212, 214, respectively. At the ends of wall portions 222, 223 are bent back inwardly opening channel portions 222*a*, 223*a* respectively. Panel 220 may be made of plastic, metal or other suitable decorative and/or diffusing material.

A second panel 30 is inserted between end plates 60*b*. Panels 230 each has a wall 231 located at the inner side of edges 215 and a flange extending therefrom contacting the ends of bottom flanges 232 on the end plates, similar to flange 184 of end plates 60*a*. Extending inwardly from each wall 231 is a flange 233 overlying a bottom diffusing plate 234 similar to diffusing plate 186 of fixture 10*a*. At the upper end of wall 231 is a channel 235 interfilled or telescoped with channel 223*a*.

A third side panel 240 extends between end plates 60*b*. Panel 240 has a wall 241 lying against inner edges 213. At the lower end of wall 241 is a channel 242 interfitting or telescoping with channel 222*a*. At the upper end of wall 241 is a rolled over flange 245 disposed about pin sockets 40*b* which correspond to sockets 40 of fixture 10. The end plates 60*b* are interconnected by the undercover 83*a*, same as in fixture 10; and the plates 14*b* which correspond to plates 14 of fixture 10, are interconnected by the top covers 25, 27.

In FIGS. 15, 16, 17, 18 there is shown a fixture 10*c* embodying a still further modified form of the invention. The releasing hinge means and latch means of this fixture are same as in the others described herein.

The end plates 60*c* have bottom flanges 240 and side flanges 241 which extend from vertical walls 242 (which corresponds to walls 61 of end plate 60). End plates 60*c* have portions 69*a* similar to portions 69 of plates 60. Attached to said portions 69*a* are adapter members 243. Said members 243 each comprises a flat wall 244 lying flat against portion 69*a* and is formed with an opening 245 receiving a screw 246 extending through portion 69*c* corresponding to portion 69 of fixture 10. Said flat wall 244 is also formed with an opening 247 through which passes tube 248 corresponding to tube 75*c* of fixture 10.

Extending outwardly from wall **244** are flanges **250**, **251** located above and below wall **244**, respectively, and disposed at right angles to said wall. Extending from said flanges **250**, **251** are wings **250***a*, **251***a*, respectively disposed above and below wall **244**, for the purpose hereinafter appearing. End plates **60***c* are interconnected by a pair of lower connecting members **254**, and a pair of upper connecting members **255**.

Lower connecting members **254** each has a wall **254***a* contacting the lower end of flange **241**. Extending from the lower end of wall **254***a* is a flange **254***b* lying on flange **240**. Extending from wall **254***a* is a flange **254***c* overlying a bottom diffusing panel **256** resting on flanges **240** and between walls **254***a*. Extending up from flange **254***c* is a web **254***d* from which extends upwardly, an upwardly opening channel **254***e* receiving the wing **251***a*. The side walls of channel **254***e* are pinched together as at **257** to grip said wing.

Member **254** may be made of metal. Its connection to members **243** interconnects the end plates **60***c*.

Members **255** each has a wall **255***a* contacting the inner surface or side of flange **241**. It is provided with a downwardly opening channel **255***b* receiving wing **250***a* and is pinched thereto as at **258**. Member **255** has a ledge **255***d* extending outwardly from channel **255***b*. Member **254** has a ledge **254***f* extending outwardly from channel **254***e*.

Side panels **260** are interfitted between members **254**, **255** at the sides of the fixture. Panels **260** may be of plastic or metal, and may be decorative and/or diffusing in character. Panel **260** has an inwardly extending upper lip **260***a* resting on ledge or lip **255***d*, and an inwardly extending lower lip **260***b* resting on flange **254***c* or disposed below ledge **254***f*.

Plate **60***c* has ribs **261**, **262** parallel to and spaced from flanges **241**. Panels **260** are disposed between said ribs and said flanges **241**.

It will thus be seen that there is provided an apparatus, and article in which the several objects of this invention are achieved, and which is well adapted to meet the conditions of practical use.

As possible embodiments might be made of the above invention, and as various changes might be made in the embodiments above set forth, it is to be understood that all matter herein set forth or shown in the accompanying drawings, is to be interpreted as illustrative and not in a limiting sense.

I claim:

1. A lighting fixture comprising an upper section, lamp means mounted therein, a lower section, releasable hinge means to hinge the lower section to the underside of the upper section, and releasable latch means to retain said sections in closed condition, whereby upon release of said latch means, the lower section may be swung down relative to the upper section, and upon release of said releasable hinge means, said lower section may be entirely separated from said upper section, said upper section comprising end members, means interconnecting said end members, said lower section comprising end members complementary to and interfitting with said end members of said upper section, and means to interconnect said end members of said lower section, said means to interconnect the end members of said upper section comprising a longitudinal plate, said end members of said upper section being provided with lugs, said plate resting on said lugs, and means to attach said lugs to the ends of said longitudinal plate.

2. The combination of claim **1**, said means interconnecting said end members of said upper section comprising means to cover said lamp means.

3. The combination of claim **2**, a ballast mounted in said upper section, and said means interconnecting said end members of said lower section, comprising means on said lower section to undercover said ballast when said sections are closed.

4. The combination of claim **1**, said longitudinal plate having inclined flanges, and said end members of said upper section having pairs of integral spaced pins receiving said flanges therebetween.

5. The combination of claim **2**, said lamp means comprising side lamps and a center lamp extending longitudinally between said end members of said upper section, cover means over said lamps, and a ballast mounted on said upper section and above said cover means, and means on said upper section to enclose said ballast.

6. The combination of claim **1**, said releasable hinge means being located adjacent the ends of the upper section and adjacent the top of said upper section.

7. A lighting fixture comprising an upper section, lamp means mounted therein, a lower section, releasable hinge means to hinge the lower section to the underside of the upper section, and releasable latch means to retain said sections in closed condition, whereby upon release of said latch means, the lower section may be swung down relative to the upper section, and upon release of said releasable hinge means, said lower section may be entirely separated from said upper section, said upper section comprising end members, means interconnecting said end members, said lower section comprising end members complementary to and interfitting with said end members of said upper section, and means to interconnect said end members of said lower section, said means interconnecting said end members of said upper section comprising means to cover said lamp means, a ballast mounted in said upper section, and said means interconnecting said end members of said lower section, comprising means on said lower section to undercover said ballast when said sections are closed, said undercover means comprising a longitudinal plate, and pairs of spaced pins on said end members of said lower section receiving end portions of said undercover plate therebetween.

8. The combination of claim **7**, said undercover plate having at each end, longitudinally aligned, alternating oppositely extending semicircular portions, and screw means extending through said end members of said lower section and passing axially through said semicircular portions, to interconnect said undercover plate to said end members of said lower section.

9. A lighting fixture comprising an upper section, lamp means mounted therein, a lower section, releasable hinge means to hinge the lower section to the underside of the upper section, and releasable latch means to retain said sections in closed condition, whereby upon release of said latch means, the lower section may be swung down relative to the upper section, and upon release of said releasable hinge means, said lower section may be entirely separated from said upper section, said upper section comprising end members, means interconnecting said end members, said lower section comprising end members complementary to and interfitting with said end members of said upper section, and means to interconnect said end members of said lower section, said releasable hinge means comprising aligned sockets in said end members of said upper section, and spring pressed members slidably mounted on said end members of said lower section and having pins rotatably received in said sockets, and said spring pressed members being slidably movable to withdraw said pins thereon from said sockets.

10. The combination of claim **9**, said latch means comprising latches pivoted to said lower section, means on said latches to engage keeper means on said end members of said upper section, spring means to keep said latches in keeper means engaging positions, and manually actuable means extending to the outside of said lower section, to retract said latches from said keeper means.

11. A lighting fixture comprising an upper section, lamp means mounted therein, a lower section, releasable hinge means to hinge the lower section to the underside of the upper section, and releasable latch means to retain said sections in closed condition, whereby upon release of said latch means, the lower section may be swung down rela-

tive to the upper section, and upon release of said releasable hinge means, said lower section may be entirely separated from said upper section, said upper section comprising end members, means interconnecting said end members, said lower section comprising end members complementary to and interfitting with said end members of said upper section, and means to interconnect said end members of said lower section, said interconnecting means for the end members of said lower section comprising longitudinal members interconnecting the upper and lower ends of said end members and enclosing means comprising side and bottom panels supported by said longitudinal members.

12. The combination of claim **11**, said longitudinal members having channels, and means attached to said end members and having portions received in said channels, and affixed to said longitudinal members within said channels.

13. A lighting fixture comprising an upper section, lamp means mounted therein, a lower section, hinge means to hinge the lower section to the undesired of the upper section, and releasable latch means to retain said sections in closed condition, whereby upon release of said latch means, the lower section may be swung open about said hinge means relative to said upper section, said upper section comprising end members, means interconnecting said end members, said lower section comprising end members complementary to and interfitting with said end members of said upper section, and means to interconnect said end members of said lower section, said means to interconnect the end members of said section comprising a longitudinal plate, said end members of said upper section being provided with lugs, said plate resting on said lugs, and means to attach said lugs to the ends of said longitudinal plate, and light diffusing means at the bottom and sides of the lower section enclosing the bottom and sides of the fixture.

14. The combination of claim **13**, said enclosing means being mounted on and between said end members of said lower section.

15. The combination of claim **14**, said end members of said lower section having integral bottom and side flanges to support said enclosing means.

16. The combination of claim **13**, the end members of said upper and lower sections having abutting portions, and the end members of one of said sections having means overlapping the end members of said other section.

17. The combination of claim **13**, said end members of each section being identical to each other and each of said end members being symmetrical about a plane at right angles to said member and passing through the middle of said member.

18. The combination of claim **13**, said enclosing means comprising light diffusing side panels, a light diffusing bottom panel, and said side and bottom panels having longitudinal interengaging means.

19. The combination of claim **18**, and the end members of said lower section having means engaging the outer surfaces of said end panels and means engaging the underside of said bottom panel.

20. The combination of claim **13**, said enclosing means being removably and replaceably mounted on said lower section.

21. The combination of claim **13**, said enclosing means comprising a light diffusing bottom panel and one or more light diffusing side panels.

22. The combination of claim **13**, said enclosing means including a plurality of pairs of light diffusing side panels, each pair having interengaging edge portions.

23. The combination of claim **22**, and a bottom panel having edge portions interengaging with one of each of said pairs of side panels.

24. The combination of claim **13**, said longitudinal plate interconnecting the end members of said upper section, overlying said lamp means.

25. The combination of claim **24**, a ballast mounted in said upper section, and said means interconnecting said end members of said lower section, comprising means on said lower section to undercover said ballast when said sections are closed.

26. The combination of claim **13**, said end members of said upper section being provided with inwardly extending lugs.

27. A lighting fixture comprising an upper section, lamp means mounted therein, a lower section, releasable hinge means to hinge the lower section to the underside of the upper section, and releasable latch means to retain said sections in closed condition, whereby upon release of said latch means, the lower section may be swung down relative to the upper section, and upon release of said releasable hinge means, said lower section may be entirely separated from said upper section, said releasable hinge means comprising aligned first bearing elements on one section, and spring pressed members slidably mounted on the other section and having second bearing elements rotatably and slidably engaging said first bearing elements, said spring pressed members being slidably movable to disengage said first bearing elements from said second bearing elements.

28. The combination of claim **27**, said latch means comprising latches pivoted to one section, keeper means on the other section, said latches having means to engage said keeper means, and manually actuable means on said one section and extending to the outside of said section to disengage said latches from said keeper means.

References Cited

UNITED STATES PATENTS

2,567,779	9/1951	Mitchell	240—51.11
2,606,998	8/1952	Winkler et al.	240—51.11
2,616,027	10/1952	Wilman et al.	240—51.11
2,833,916	5/1958	Foulds	240—51.11
2,913,575	11/1959	Lipscomb	240—51.11
2,926,237	2/1960	Sorenson	240—51.11
3,078,366	2/1963	Winkler	240—51.11
3,185,835	5/1965	Muller et al.	240—51.11
3,211,905	10/1965	Picha et al.	240—51.11

NORTON ANSHER, Primary Examiner

R. M. SHEER, Assistant Examiner

U.S. Cl. X.R.

240—147