Aug. 9, 1966 E. C. NICHOLS ETAL 3,265,095

LOOM REED MOTION

Filed Oct. 6, 1964 6 Sheets-Sheet 1

FIG. 1

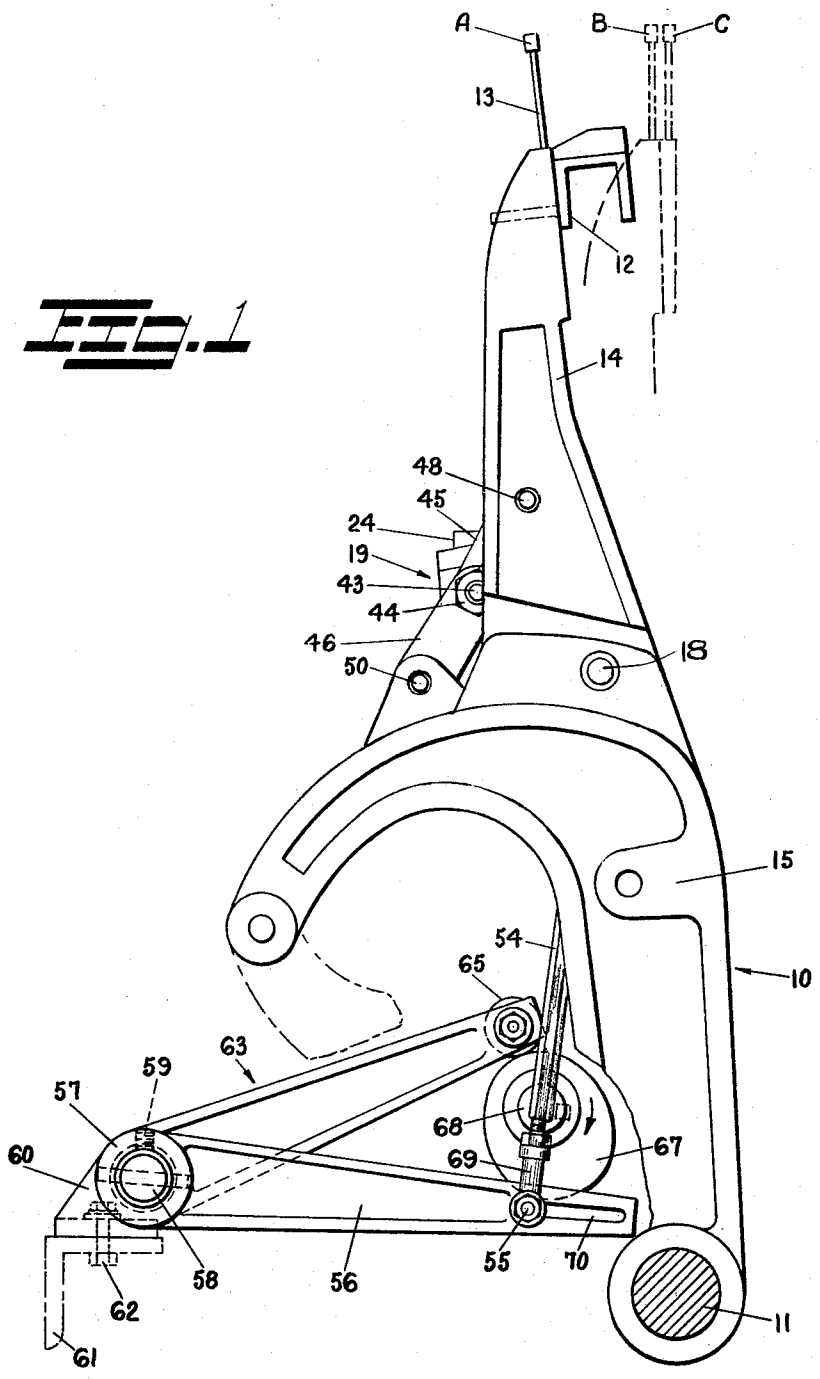

INVENTOR.
EDWARD C. NICHOLS.
BY BERTRAND E. GUINDON.
Albert Q. Mahassel
ATTORNEY

Aug. 9, 1966 E. C. NICHOLS ETAL 3,265,095

LOOM REED MOTION

Filed Oct. 6, 1964 6 Sheets-Sheet 2

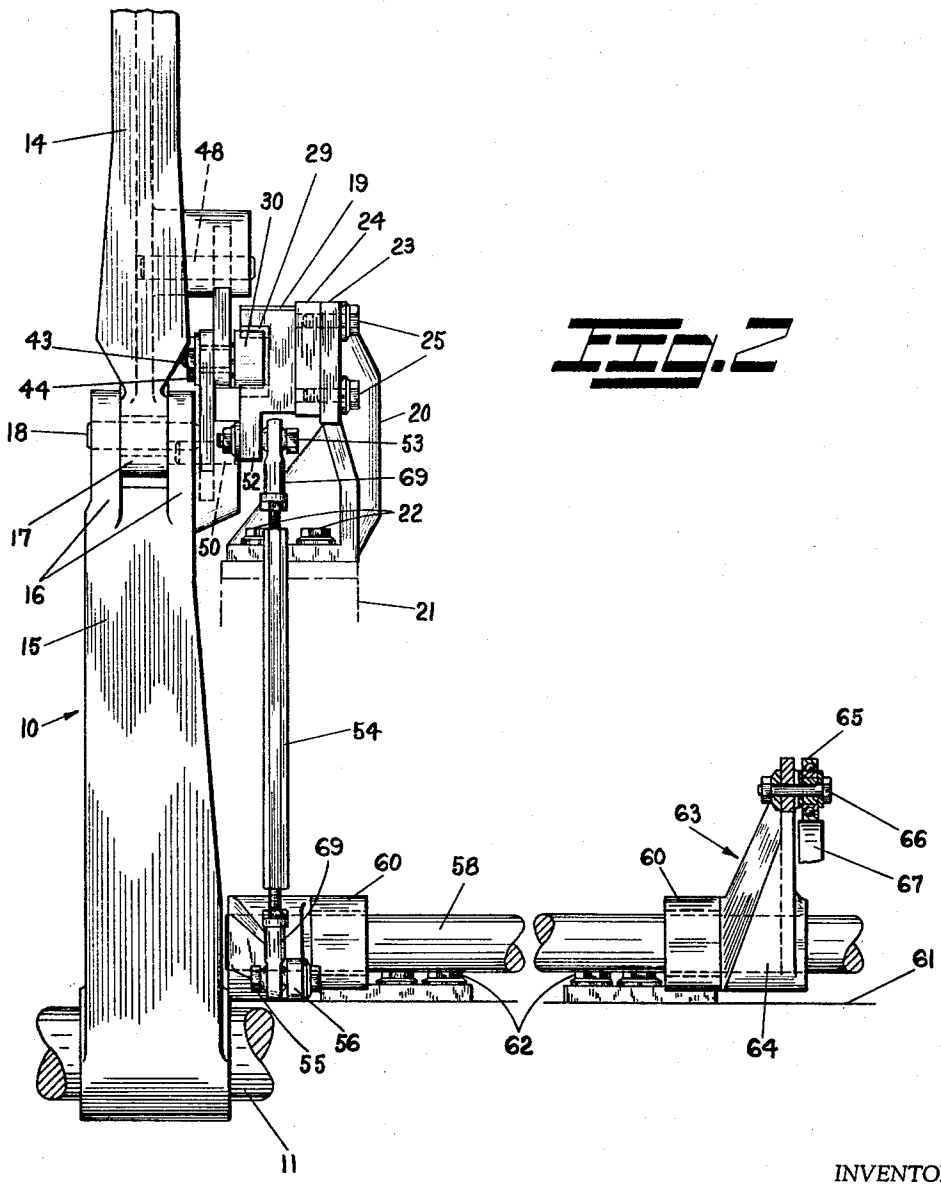

FIG. 2

INVENTOR.
EDWARD C. NICHOLS.
BY BERTRAND E. GUINDON.
Albert A. Mahassel
ATTORNEY

Aug. 9, 1966 E. C. NICHOLS ETAL 3,265,095

LOOM REED MOTION

Filed Oct. 6, 1964 6 Sheets-Sheet 3

FIG. 3

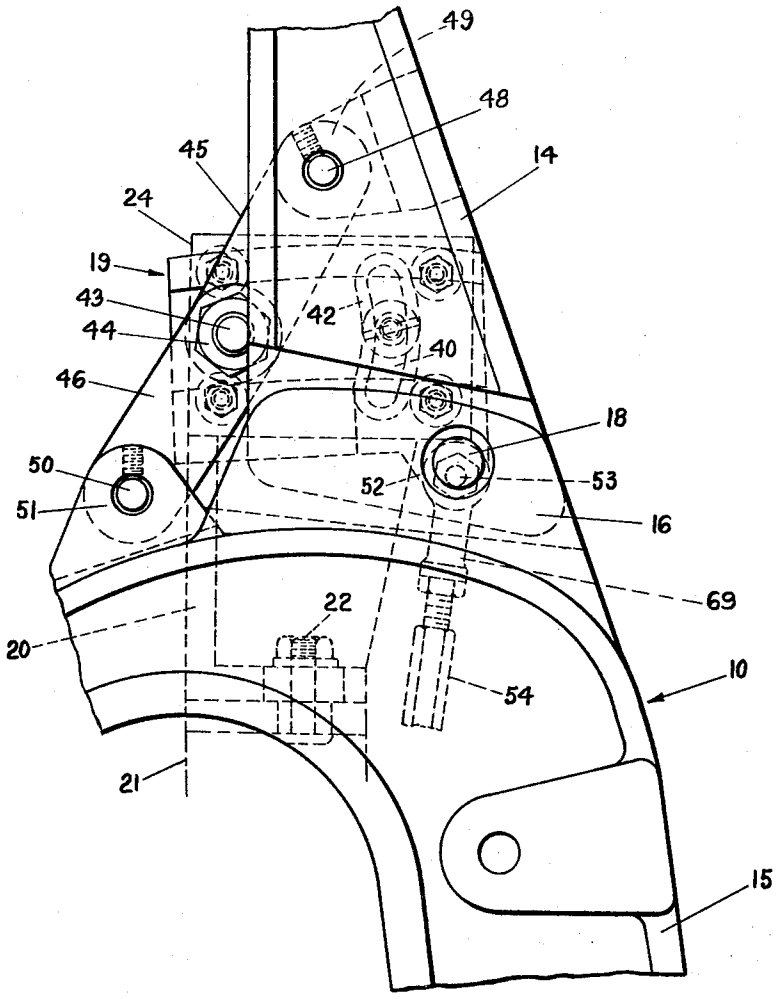

INVENTOR.
EDWARD C. NICHOLS.
BY BERTRAND E. GUINDON.
Albert A. Mahassel
ATTORNEY

LOOM REED MOTION

Filed Oct. 6, 1964 6 Sheets-Sheet 4

FIG. 4

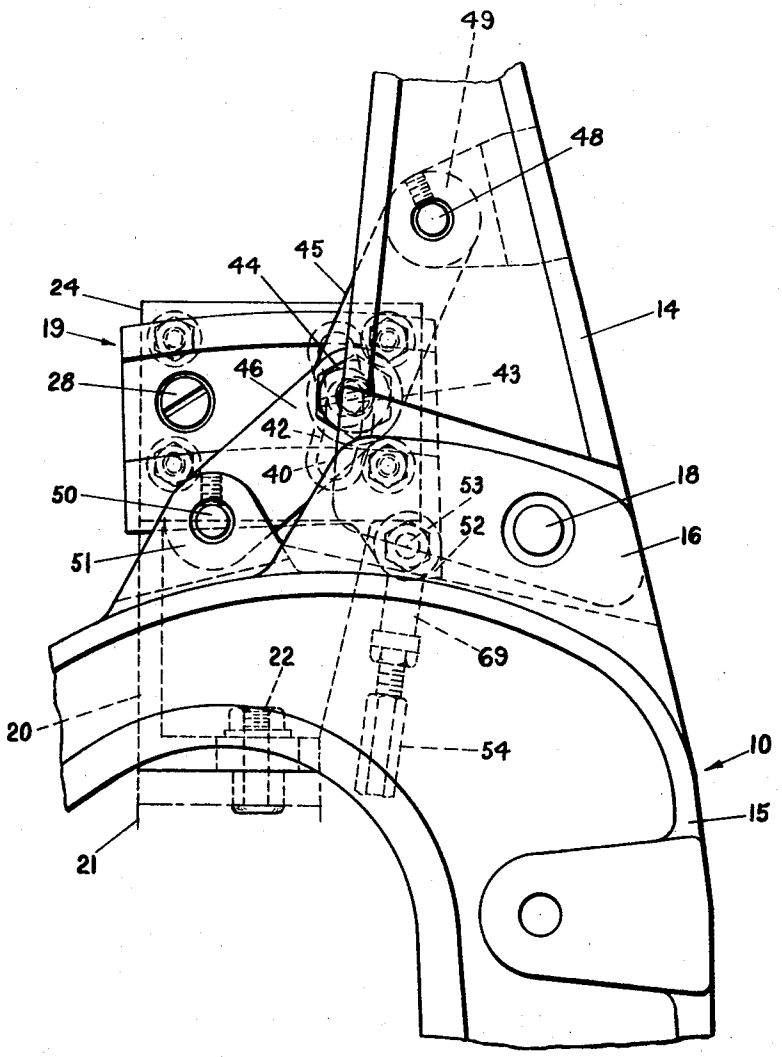

INVENTOR.
EDWARD C. NICHOLS.
BY BERTRAND E. GUINDON.
Albert A. Mahassel
ATTORNEY

Aug. 9, 1966 E. C. NICHOLS ETAL 3,265,095

LOOM REED MOTION

Filed Oct. 6, 1964 6 Sheets-Sheet 5

FIG. 5

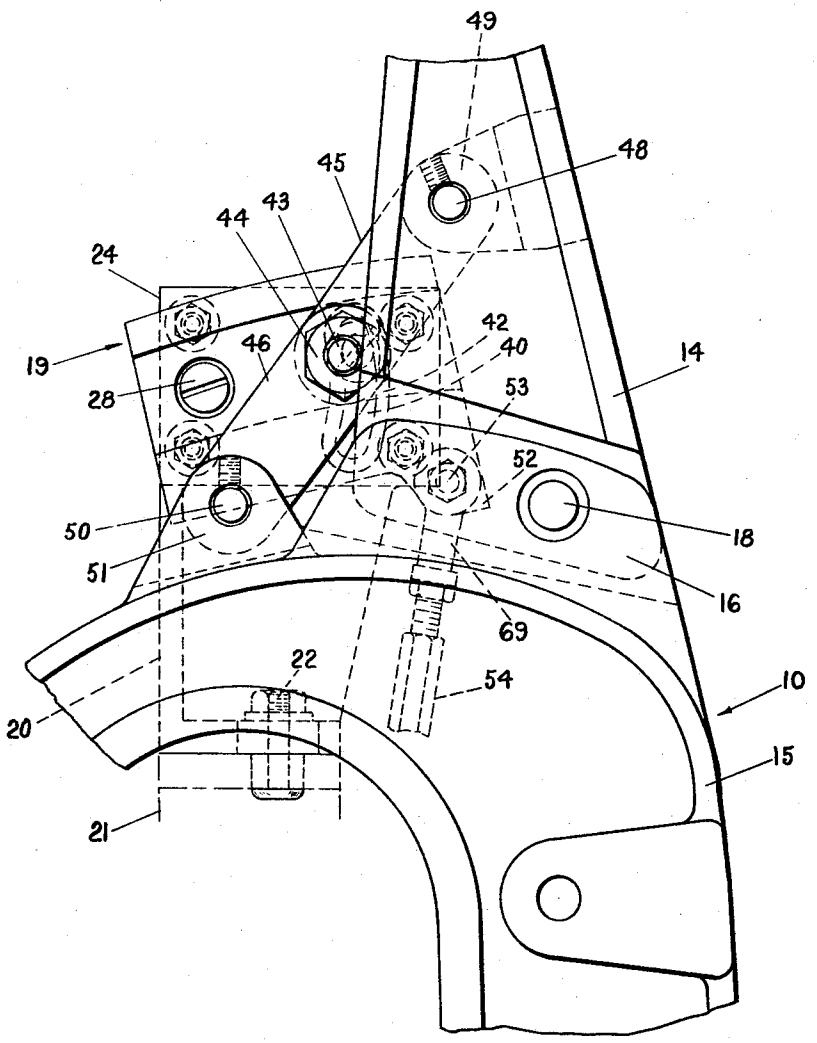

INVENTOR.
EDWARD C. NICHOLS.
BY BERTRAND E. GUINDON.
Albert A. Mahassel
ATTORNEY

Aug. 9, 1966 E. C. NICHOLS ETAL 3,265,095

LOOM REED MOTION

Filed Oct. 6, 1964 6 Sheets-Sheet 6

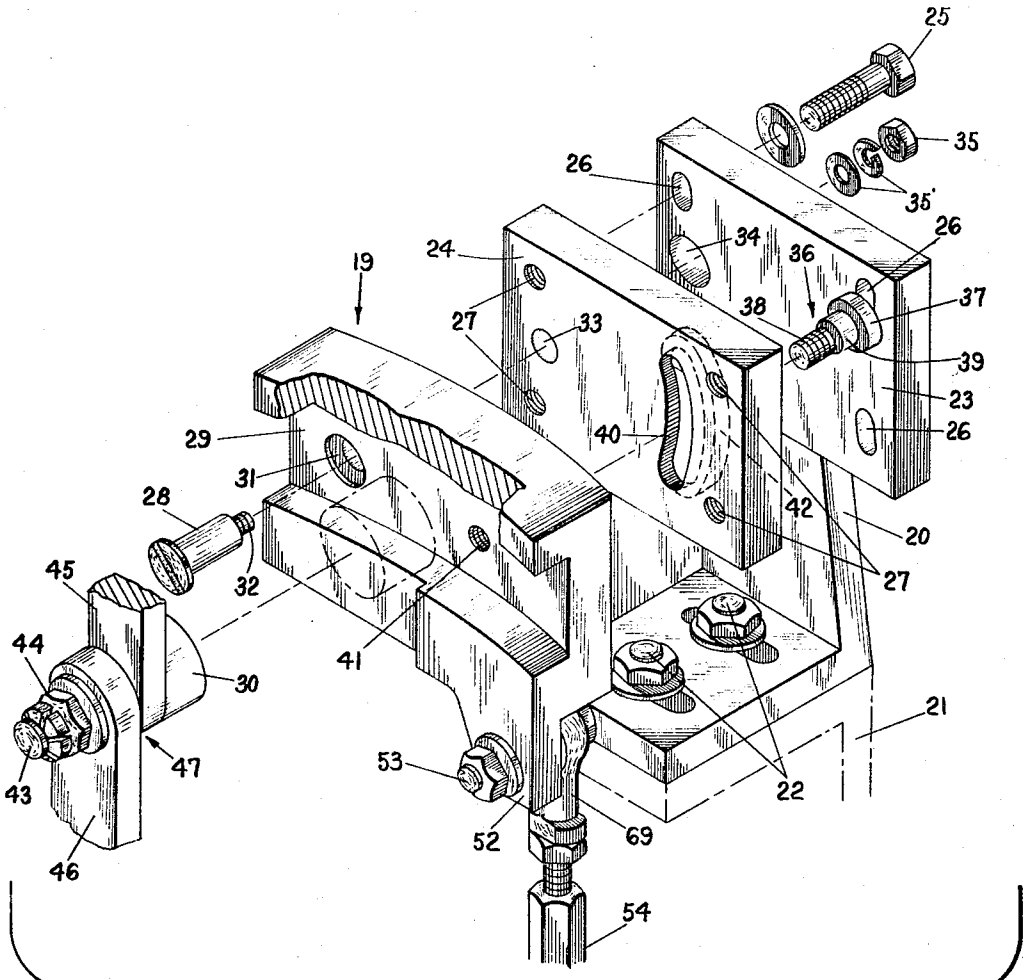

FIG. 5

INVENTOR.
EDWARD C. NICHOLS.
BY BERTRAND E. GUINDON.
Albert A. Mahassel
ATTORNEY

United States Patent Office 3,265,095 Patented August 9, 1966

3,265,095

LOOM REED MOTION

Edward C. Nichols, Upton, Mass., and Bertrand E. Guindon, Cumberland, R.I., assignors to Draper Corporation, Hopedale, Mass., a corporation of Maine

Filed Oct. 6, 1964, Ser. No. 401,782
6 Claims. (Cl. 139—26)

This invention pertains to a reed motion for looms adapted to weave terry fabric and, more particularly, to such a motion for looms of the shuttleless type such as disclosed in United States Patent No. 2,604,123.

It is a general object of the invention to provide a reed motion for shuttleless looms capable of functioning in a manner to produce a typical terry weave having three weft insertions per cycle.

It is a more specific object to provide a cam controlled reed motion timed to function with the swinging of the swords to effect partial beat-up by the reed on certain picks and full beat-up at others.

A further object is that of providing a simple and inexpensive reed motion for performing a function which has heretofore required a device having great multiplicity of parts and complication.

Another object of the invention is to devise a terry reed motion that will perform its intended function with a minimum of mechanism thereby reducing substantially the added weight factor prevalent in known mechanisms of the prior art.

A still further object is that of providing a reed motion for shuttleless looms which will not affect the reeded width of the fabric for a given size of loom or require relocation of the harness frames to accommodate said motion.

Further objects and advantages will become apparent from the following more detailed disclosure.

Along with the development of the shuttleless type of loom and its ability to operate at much greater speeds than the conventional fly shuttle type of loom, there has developed a great deal of interest in the feasibility of producing terry fabric on this type of loom.

United States Patent No. 3,136,342 discloses one form of a terry reed motion which makes the weaving of terry fabric possible on a shuttleless loom and the loom reed motion according to the instant invention is an improvement over the device disclosed in the above-mentioned patent.

Shuttleless looms of the type to which the instant invention is applicable are provided intermediate the loom-sides with swords for supporting the loom lay beam and reed and serve to guide the same in a known manner through the arc of travel they are caused to follow during loom operation.

The swords utilized with the reed motion to be more fully described hereinafter are hinged intermediate their ends and are cam controlled by interconnecting linkage members.

The formation of a typical terry fabric requires three picks of filling per cycle and during the first and second pick the upper portion of the swords, which supports the lay and reed, are displaced slightly causing only partial beat-up of the two picks. For the third pick of the terry cycle, the cam controlled linkage returns the upper portion of the swords to a non-displaced position relative to the remaining portion of said swords to effect a normal and full beat-up by the reed, during which the pile loops are formed in a known manner.

The invention will be described in detail by reference to specific embodiments thereof one of which is illustrated in the accompanying figures of drawing, wherein:

FIG. 1 is a view in side elevation of a shuttleless loom sword and the reed motion according to the invention showing by means of full and phantom lines the three extreme positions the reed is caused to assume during the terry cycle;

FIG. 2 is a view in front elevation of the camming and linkage members utilized to displace the upper portion of the swords;

FIG. 3 is a view in side elevation of a portion of a sword showing the position of the upper displaceable portion when at back center or in that position depicted by the letter "A" in FIG. 1;

FIG. 4 is a view similar to that of FIG. 3 but showing the upper portion of the sword in its partial beat-up position or in that position depicted by the letter "B" in FIG. 1;

FIG. 5 is a view similar to that of FIG. 3 but showing the upper portion of the sword in its full beat-up position as illustrated in FIG. 1 by letter "C"; and

FIG. 6 is an exploded view of a portion of the camming elements utilized to displace the upper portion of the sword to the positions required in the terry cycle.

Now referring to the figures of the drawing, there is illustrated in FIG. 1 parts of a shuttleless loom including a sword generally indicated by numeral **10** that is pivotably mounted for swinging movement on a rocker shaft **11**. Although only the left-hand sword is illustrated in the various figures of drawing, it is to be understood that a similar right-hand sword is utilized at the opposite side of the loom and is interconnected with the upper portion of sword **10** with the usual lay beam **12**. The lay beam supports the customary reed **13** which in a known manner is swung to and fro therewith to beat the picks of filling into the fell of the fabric as it is formed. The swords which form a part of the instant invention are made in two parts comprising an upper portion that is designated by numeral **14** and a lower portion which is depicted by numeral **15**. These upper and lower portions of the swords are pivotably attached one to the other to permit displacement of the upper portion relative to the lower during the terry weaving cycle and will be more fully described hereinafter.

The upper end of the sword's lower portion **15** is bifurcated as at **16** (FIG. 2) and is adapted to receive therebetween the lower end **17** of the sword's upper portion **14** which is of reduced thickness to permit pivotable movement thereof within the bifurcation **16**. A pin **18** provides the pivot point for the sword's upper portion **14** by assembling in an appropriate aperture in its lower end **17** with each end of said pin being seated in aligned apertures provided in the bifurcation **16**.

The means by which the sword's upper portion is automatically displaced for the first two picks of a terry motion's three-pick cycle is shown in greater detail in FIGS. 2 and 6 and includes a reed cam generally indicated by numeral **19**. The supporting members for reed cam **19** include a reed cam bracket **20** which is fixedly attached to a portion of the loom frame **21** by means of bolts **22**. The upper portion of the reed cam bracket **20** is provided with an integrally formed and vertically disposed plate-like surface **23** to which a cam guide plate **24** of similar configuration is adapted to attach by means of cap screws **25** (one only shown in FIG. 6). The shank portions of these cap screws pass through elongated apertures **26** disposed adjacent each corner of the plate-like surface **23** and the threaded portions thereof assemble in aligned tapped holes **27** provided in the cam guide plate **24**. These elongated apertures **26** provide a means of vertical adjustment for the cam guide plate **24**.

The reed cam **19** is provided on one side thereof with a vertically disposed flat surface that abuts the cam guide plate **24** when in an assembled position and said cam is pivotably attached to the latter by means of a pivot pin **28** (FIG. 6). That side of the reed cam opposite the above-mentioned vertically disposed flat surface is

provided with an arcuated channel or cam track **29** in which a reed cam follower **30** is adapted to move in a manner to be more fully described.

The pivot point of the reed cam **19** is disposed adjacent the rear portion of the cam as seen looking from the front of the loom. The pivot pin **28** assembles in a counterbored aperture **31** in a manner to permit the head portion of said pin to be flush with the inner surface of the cam track **29** and the remaining portion of said aperture serves as the journal surface for the pivotable movement of the cam on said pin. The threaded portion **32** of the pivot pin (FIG. 6) extends through an aligned aperture **33** provided in the cam guide plate **24** and thence into an enlarged clearance hole **34** in the plate-like surface **23**. The nut **35** and washers **35'** when in assembled position on the threaded portion **32** of pin **28** are disposed within the clearance hole **34** and the reed cam, being in abutting relation with the cam guide plate **24**, is vertically pivotable relative thereto.

The reed cam **19** during its pivotable movement is guided adjacent its forward end by a shouldered guide pin generally indicated by numeral **36** (FIG. 6). This guide pin includes a circular head portion **37**, a threaded portion **38** and an intermediate portion **39** of lesser diameter than said head portion which when in assembled position moves with the reed cam **19** in a vertically disposed arcuated slot **40** provided in and adjacent the forward end of the guide plate **24**. The threaded portion **38** of the guide pin **36** assembles in a tapped hole **41** provided adjacent that end of the reed cam opposite its pivot point and the head portion **37** fits into and is adapted to move within a recess **42** that forms a part of the arcuated slot **40**, thereby eliminating interference of said head portion with the plate-like surface **23**.

The reed cam follower **30** that is adapted to move within the confines of the cam track **29** is rotatably assembled on a stud member **43** which includes a lock nut **44** and a pair of oppositely directed link members **45** and **46** pivotably assembled intermediate said follower and lock nut to form a toggle joint generally indicated by numeral **47** (FIG. 6).

Link member **45** extends in a generally upwardly direction and is pivotably attached at its upper end to the sword's upper portion **14** by means of a pin **48** as at **49**.

Link member **46** extends in a generally downwardly direction and is pivotably attached at its lower end to the sword's lower portion **15** by means of a pin **50** as at **51**.

It should now be readily understood how the toggle joint **47** is effective in displacing the sword's upper portion **14** during loom operation. When the reed cam is caused to pivot downwardly, the reed cam follower **30** moves forwardly in the cam track **29**. This movement causes the link members **45** and **46** to pivot in a manner which shortens the distance between the pivot points where they are attached to their respective sword members, thereby tilting or pivoting the sword's upper portion **14** slightly rearwardly. When the reed cam is caused to pivot upwardly or to return to its initial position, the cam follower **30** moves rearwardly within the cam track **29** causing the link members to pivot to their initial position, thereby causing the sword's upper portion **14** to tilt or pivot forwardly to its original position.

The means by which the reed cam **19** is caused to pivot upwardly and thence downwardly according to the requirements of the terry weaving cycle will now be described.

The forward end of the reed cam is provided with an integrally formed and downwardly directed lug member **52** and has pivotably attached thereto by means of a bolt **53** a push rod **54** which extends in a generally downwardly direction. The lower end of this push rod **54** is pivotably attached in a similar manner by means of a bolt **55** to and adjacent the forward end of a single armed lever **56**. The opposite end of this lever terminates in a hub **57** which is fixedly attached to a horizontally disposed terry shaft **58** by means of a set screw **59**. The terry shaft is supported for oscillating movement in block type bearings **60**, the latter being assembled to the loom's back girt **61** by means of bolts **62** (FIGS. 1 and 2).

Terry shaft **58** being horizontally disposed extends for a distance substantially equal to the distance between the loom swords. Although only one lever **56** is shown in FIGS. 1 and 2 for actuating the reed cam on the left-hand side of the loom, it should be understood that a similar lever is utilized at the opposite end of the terry shaft for performing the same function simultaneously at the right-hand end of the loom.

In a position approximately the center of the terry shaft **58** there is provided a terry shaft lever generally indicated by numeral **63** having a hub portion **64** that is fixedly positioned on said terry shaft (FIG. 2). This lever extends in a forwardly direction and angularly upward and is provided adjacent its forward end with a rotatable cam follower **65** which is attached thereto by means of a bolt **66**.

Cam follower **65** is adapted to maintain contact with the outer periphery of a terry cam **67**, the latter being mounted for rotary movement in a clockwise direction on the loom's harness cam shaft **68**. The means by which the harness cam shaft is caused to rotate is well known to those conversant with the art and further reference to it at this time is considered unnecessary.

In operation, the formation of terry fabric requires a three-pick cycle as heretofore described. The terry cam is timed to make one complete revolution during each three-pick terry cycle and the configuration of said cam is such that cam follower **65** is caused to dwell on approximately two-thirds of its outer periphery during each revolution thereof.

The dwell period of the cam follower **65** accounts for the first two picks in which only partial beat-ups are made, or in other words, the sword's upper portion is tilted slightly rearwardly so that the limit of the reed's forward movement is that depicted by the letter "B" in FIG. 1.

After completion of the second pick and prior to starting the third, the cam follower starts to ride up the high point of the cam forcing the terry shaft lever to pivot accordingly. This motion moves the terry shaft in an anti-clockwise direction and at the same time pivots the single armed levers **56** affixed to the ends thereof in an upwardly direction. The push rod **54** having one end pivotably attached to the forward end of lever **56** and its opposite end to the reed cam is moved upwardly by this motion to pivot said reed cam in a like manner. The tilting of the reed cam upwardly causes the cam follower to move slightly rearwardly thereby pivoting the link members **45** and **46** into general alignment to move the sword's upper portion **14** to that position which effects full beat-up as depicted by the letter "C" in FIG. 1.

This cycle is repeated after the third pick and prior to the first by the cam follower moving downwardly to the dwell surface of the terry cam. This movement is transmitted through the aforementioned linkage causing the push rod **54** to be pulled downwardly thereby moving the reed cam in a like manner to pivot the sword's upper portion to the partial beat-up position. The length of the push rod **54** is adjustable by means of the rod ends **69** assembled on each end thereof. Additionally, further adjustment of this rod may be had to increase or decrease the distance the reed cam is caused to pivot by moving the lower end of the rod forwardly or rearwardly within the elongated slot **70** provided in the forward end of the lever **56**.

While one embodiment of the invention has been disclosed, it is to be understood that the inventive concept may be carried out in a number of ways. This invention is, therefore, not to be limited to the precise details de-

scribed, but is intended to embrace all variations and modifications thereof falling within the spirit of the invention and the scope of the claims.

We claim:

1. In a loom for weaving terry fabric in which the picks are inserted by reciprocable carriers, a reed motion which includes swords being pivoted for swinging movement and having a lay beam and a reed fixedly attached thereto, each one of said swords being a single supporting member, said swords each being hinged intermediate their ends forming an upper portion and a lower portion, and means to displace as a unit the said upper portion together with said lay and reed relative to the said lower portion of each of said swords at certain picks to effect partial beat-up and to return as a unit said upper portion, said lay and reed to a non-displaced relationship with said lower portion of each of said swords at other picks whereat said unit will effect normal and complete beat-up.

2. Mechanism as defined in claim 1 wherein the upper portions are displaceable relative to the lower portions by pivotal motion about said intermediate hinge.

3. Mechanism as defined in claim 2 wherein said displacing means includes a pivotally supported cam member, and a cam follower being maintained in contact with said cam member and effective in controlling the displacement of the upper portion of said sword relative to the lower portion.

4. The mechanism of claim 3 wherein said cam member defines an arcuated cam track pivotally held for movement in a generally vertical plane.

5. Mechanism as defined in claim 4 wherein said cam follower is rotatably assembled upon the central point of a toggle joint device.

6. Mechanism as defined in claim 5 wherein said toggle joint device includes a first link being pivotally fixed to the upper portion of said sword and a second link being pivotally fixed to the lower portion of said sword, and means for controlling the pivotal movement of said cam track to thereby vary the angle formed by said first and second links.

References Cited by the Examiner

UNITED STATES PATENTS

1,591,912	7/1926	Brown	139—27
2,625,956	1/1953	Sippel	139—26
3,136,342	6/1964	Short	139—26

FOREIGN PATENTS

42,443	2/1888	Germany.
294,897	7/1928	Great Britain.

MERVIN STEIN, *Primary Examiner.*

DONALD W. PARKER, *Examiner.*

H. S. JAUDON, *Assistant Examiner.*