United States Patent [19]

Brown

[11] **3,843,133**

[45] **Oct. 22, 1974**

[54] **GAME APPARATUS FOR PLAYING AND RECORDING SUCCESSIVE PLAYS IN A GAME**

[76] Inventor: **Paul Douglas Brown,** 1011 N.E. 141st, North Miami, Fla. 33161

[22] Filed: **Sept. 4, 1973**

[21] Appl. No.: **394,219**

[52] **U.S. Cl.** ..... **273/136 R,** 273/137 R
[51] **Int. Cl.** **A63f 3/02**
[58] **Field of Search** 273/136

[56] **References Cited**

UNITED STATES PATENTS

3,477,715	11/1969	Nekton	273/136 B
3,703,293	11/1972	Nekton	273/136 C

FOREIGN PATENTS OR APPLICATIONS

765,850	3/1934	France	273/136 E

Primary Examiner—Delbert B. Lowe
Attorney, Agent, or Firm—Gustave Miller

[57] **ABSTRACT**

This is a game apparatus for playing and recording successive plays in a game such as chess, checkers or like games. The squares or playing areas have vertical openings therethrough which receive the shanks of playing pieces. The pieces have identifying head portions larger than the openings in the game-board, and a cover is slidable over the board and over the heads of the playing pieces. Identifying and recording indicia are provided on the bottom of the board and the bottom of the playing pieces. The bottom indicia of the playing pieces, when held in position by the cover, are in the same plane with the recording indicia on the bottom of the game-board whereby the board and pieces recording indicia may be pressed on an ink pad, and then pressed on a recording sheet, preferably a standard size postcard to record the position of the playing pieces on the board, which may then be mailed to a correspondent elsewhere for playing a game by correspondence.

Inasmuch as the entire board and the positions of all the pieces are recorded or rubber stamped on a post card or other recording sheet, there is no language barrier between the players, and the game may be played by mail irrespective of the fact that neither player may be conversant with the language or even the alphabet of the other; each player need only be capable of addressing the post cards to the other, or each player preaddresses a supply of post cards to himself and mails them to the other. Thus, a player knowing only English may play with a player knowing only Japanese, or Chinese or Russian.

In addition, a kit is provided for receiving and storing the game-board and the playing pieces, and has an ink pad for inking the board and pieces, a cover with storage space for post cards or other record sheets and rack compartments on each side of the ink pad and board storing compartment for storing the playing pieces that have been removed from the game-board.

13 Claims, 6 Drawing Figures

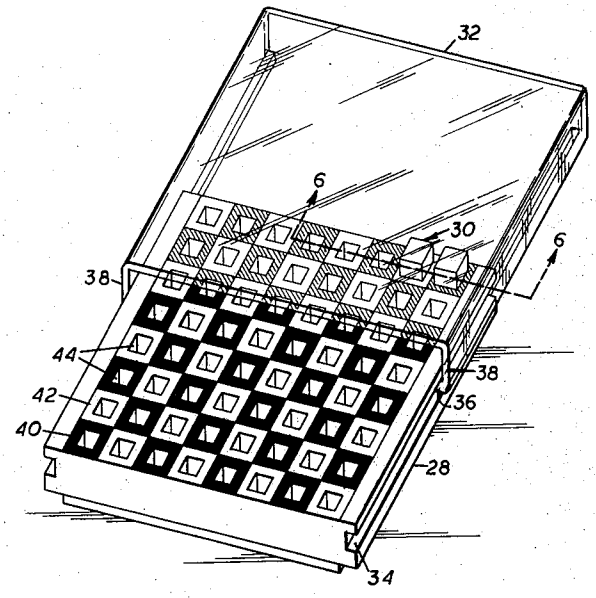

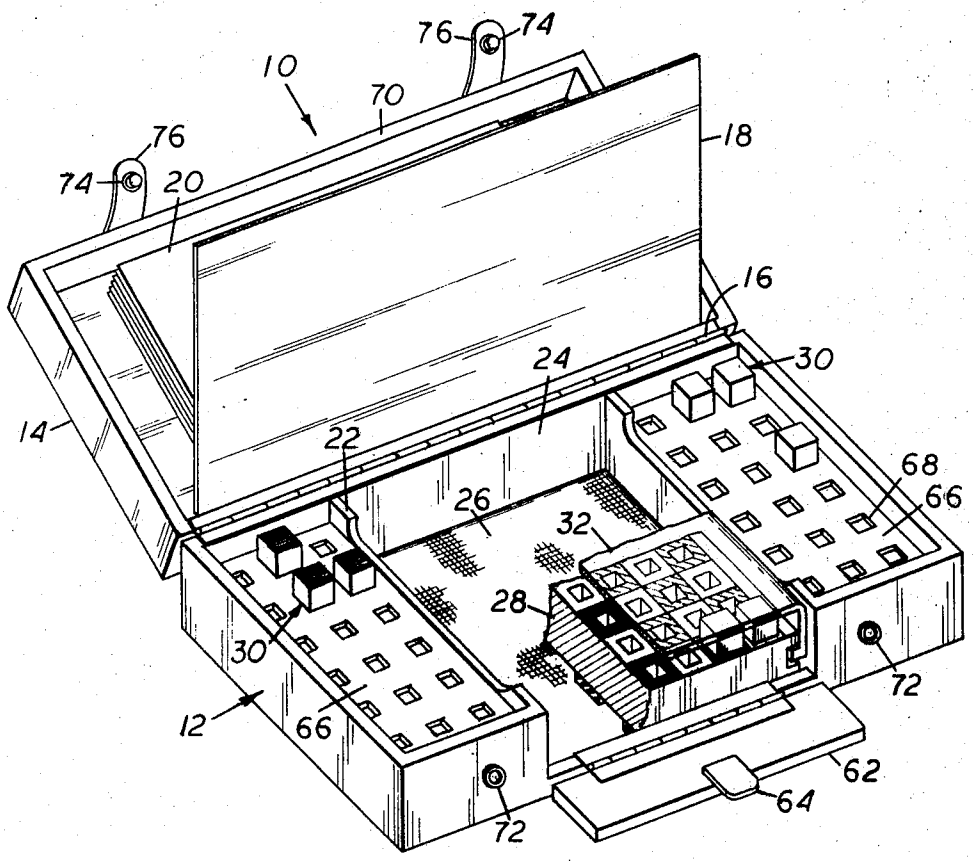

FIG. 1

FIG. 2

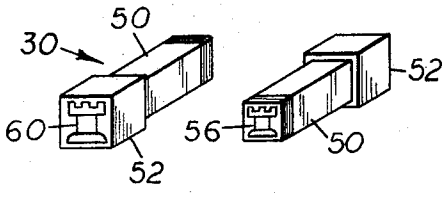

FIG. 3

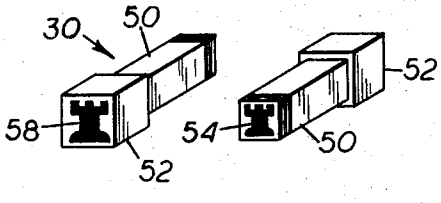

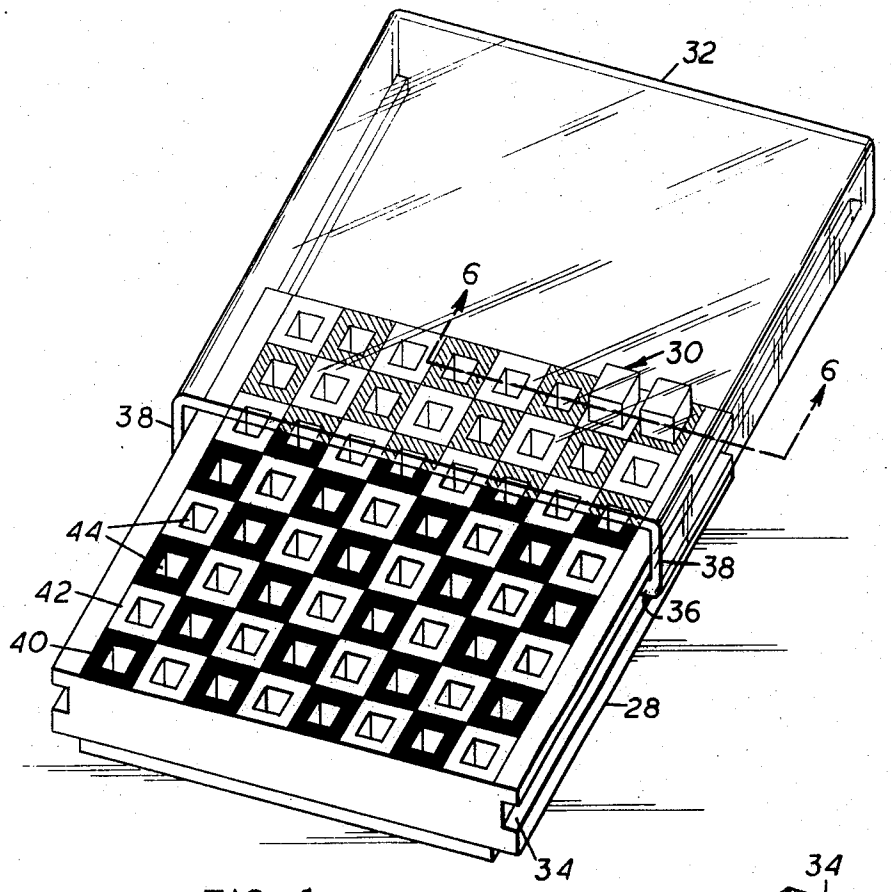

FIG. 4

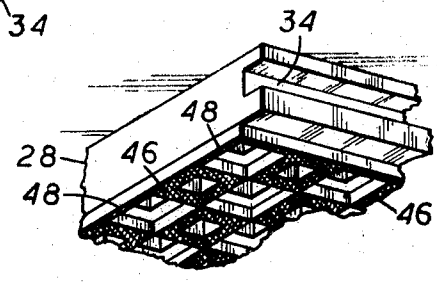

FIG. 5

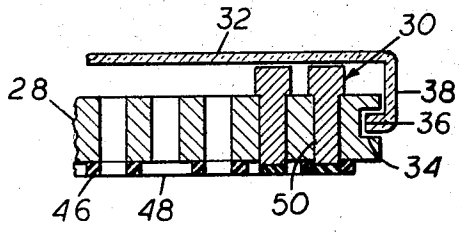

FIG. 6

GAME APPARATUS FOR PLAYING AND RECORDING SUCCESSIVE PLAYS IN A GAME

BACKGROUND OF THE INVENTION

This invention relates to a playing and recording apparatus for games, particularly for recording successive moves of the game pieces in games such as chess, checkers or other games having definitely movable pieces, by use of the playing pieces during actual play. Chess, for instance, is an international game, often played by correspondence between players in different countries, using certain codes utilizing alphabet and number indicia, indicating the moves. With this invention, no codes are needed, no understanding of any common code or even of any alphabet or number system, and each player makes his move, then records a graphic illustration of the game board showing the actual move, preferably on a standard post card when the apparatus is made of appropriate size, or, if larger, on any recording sheet of paper, and mails the graphic record to the correspondent player, who then makes his move on a similar game apparatus and mails it to the first correspondent, both keeping up the game until it is finished. Any language barrier between the players is thus eliminated. No specially designed record sheet is necessary; any piece of paper or post card is enough, for the game board and game pieces act as a rubber stamp to completely and graphically illustrate each move without any possibility of misunderstanding by the other player.

OBJECTS OF THIS INVENTION

It is an object of this invention to provide a game apparatus for easily, quickly and accurately graphically recording the move of each game piece as soon as it is made, particularly in chess, checkers and like games with definitely movable pieces.

Another object of this invention is to provide game pieces that can be readily identified and used in combination with the game-board both for playing and for printing the complete game-board and the positions of all pieces remaining on the game-board at each move on any type of recording sheet, such as a standard post card or any sheet of paper.

A further object of this invention is to provide a chess or checker game apparatus that may be used both for playing the game and as a rubber stamp for graphically illustrating each move on any sheet of recording material between moves, with the recorded plays providing a complete record of the entire game.

Still a further object of this invention is to provide a rubber stamp game apparatus that is particularly useful in playing the game by correspondence with another player located anywhere else, overcoming any language barrier, completely eliminating the need for any knowledge of any codification system or even of understanding the alphabet or number system of a foreign language to show each move in the game.

Still a further object of this invention is to provide a game apparatus for playing chess, checkers, etc. and for readily graphically illustrating each move, as on any convenient sheet of paper, or, when made in appropriate size, on a standard post card which may be mailed to the correspondent player in playing the game by correspondence with a player located in China, Japan, India or anywhere in the world without the need of any codification system whatsoever to make the game move understandable by the recipient.

A further object of this invention is to provide a game apparatus kit which may be of a size for readily carrying in one's pocket, or any convenient size, for use in studying the game, or playing the game with anyone, whether present or elsewhere, and for graphically recording each play after it is made, as simply as in using a conventional rubber stamp to print the information on the rubber stamp.

A further object of this invention is to provide a kit including an ink pad, a game-board and set of pieces which is automatically set up as a rubber stamp for use in graphically illustrating each move after it is made, and wherein the kit is also provided with racks for holding the pieces removed from the game-board in the course of play, and even provides means for storing recording sheets such as paper or standard post cards.

Yet a further object of this invention is to provide a game apparatus particularly useful in playing the game of chess internationally by correspondence with a player wherein each player may have no knowledge of the written language of the other player.

A further object of this invention is to provide a game apparatus kit which may be pocket size for use by a player anywhere, both in playing the game and in studying the game and readily graphically recording the game by merely rubber stamping or printing the result of each move, illustrating the entire board and the position of each game piece thereon.

Yet a further object of this invention is to provide a game apparatus kit wherein each playing area or square of the game-board has an opening therethrough and has playing areas or game-board squares identifying and recording contact indicia on the bottom thereof, and each piece has a shank portion fitting through the openings, with identifying and recording contact indicia on the bottom end of the shank, as well as an identifying head portion larger than the shank and limiting the movement of the shank down through the board opening just enough to place its contact indicia in the same plane with the contact indicia of the game-board, in combination with a readily removable game-board cover that, when in position, will hold the inserted pieces in the game-board with their contact indicia in the same plane of the game-board contact indicia so that the board and inserted pieces may be used in the manner of a rubber stamp for pressing on an inked pad to coat the contact indicia with stamping ink, and then on a recording surface, such as a sheet of paper or a standard size post card, for graphically recording the position of each piece in the board.

A further object of this invention is to provide an improvement over the prior art such as U.S. Pat. Nos. 2,676,086; 3,254,893; and 3,477,715, and particularly over the latter patent in that this invention is capable of printing and graphically illustrating individual moves on any sheet of paper and does not use a preprinted record sheet. In appropriate size, it may be stamped on a standard post card for use in playing the game by correspondence as well as for keeping graphic record on any sheet of paper of each move for later study, or for keeping records of plays in tournament games.

A still further object of this invention is to provide a game kit that is adapted to any particular type of game-board using definitely movable game pieces, which may

be made for chess, checkers, Parcheesi, Chinese checkers or any other such type of game.

Another object of this invention is to provide a game kit particularly useful to a reporter in recording each and every move in a chess, checker or other game-board and definitely movable game piece type of tournament.

BRIEF DESCRIPTION OF THE FIGURES

With the above and other related objects in view, this invention consists in the details of construction and combination of parts, as will be more fully understood from the following description, when read in conjunction with the accompanying drawings, in which:

FIG. **1** is a perspective view of the entire game apparatus kit of this invention.

FIG. **2** is a perspective view showing both the head portion and the indicia recording portion of one playing piece of one player.

FIG. **3** is a similar view of a similar playing piece of the other player.

FIG. **4** is a perspective top view, on a larger scale, of the game-board, some game pieces, and the cover for holding the pieces in the board in indicia inking and recording position.

FIG. **5** is a fragmentary perspective bottom view of the game-board showing the bottom recording indicia thereof.

FIG. **6** is a section on line **6—6** of FIG. **4.**

DETAILED DESCRIPTION OF THE INVENTION

There is shown at **10** the game kit of this invention. It particularly is useful in small size, as a pocket game-board, as well as a playing board, and in addition useful for correspondence playing with another player located anywhere in the world, as well as a reporting and recording kit for graphically recording and reporting games in tournament play. The kit **10** consists of a casing or chest **12** provided with a cover **14** suitably hinged thereto at **16.** Inside the cover, there is provided an inside cover **18** for retaining recording sheets **20** therein. In appropriate size, the recording sheets may be standard size post cards suitable for mailing. The chest or casing **12** is divided by two partitions **22** into three compartments, the middle compartment **24** providing an ink pad compartment having an ink pad **26** at the bottom thereof. It also serves for storing the game-board **28** with its inserted game pieces **30** and game piece retaining transparent cover **32** slidably held thereon by cooperation of the game-board side slots or tracks **34** and the inturned toes **36** of the cover legs **38.**

The playing areas of this game-board **28** are illustrated as being in the shape of black squares **40** and white squares **42,** such as on any conventional chessboard or checker board, but may obviously be the playing areas of any conventional or unconventional type of game-board on which games are played with definitely movable game pieces, and this specification and the claims thereof must be so interpreted, and not limited to merely chess or checker games. Parcheesi and Chinese checkers are illustrative of other game-board games that may be made up according to this invention. Any game with definitely movable game pieces may be made up and played according to this invention.

Each playing area or square **40** and **42** is provided with a vertical opening **44** therethrough, which opening may be square, as shown, or circular, oval or otherwise, as desired. At the bottom of the board **28** there is provided contact means providing playing areas identifying and recording indicia **46** and **48,** which, when pressed on the ink pad **26,** will pick up stamping ink, and when then pressed on a recording sheet **20,** will graphically illustrate the top surface of the game-board **28** and the position of the pieces **30** therein.

Each game piece **30** is provided with a shank portion **50** and an identifying head portion **52.** The shank portion **50** is complementary in size and shape to the playing area vertical opening **44** and is provided at its bottom end with contact means providing identifying and recording indicia **54** or **56** correspondto the indicia **58** or **60** on its head portion **52.** In the illustrated pieces, the identifying indicia represent chessmen Black Castle and White Castle, and the other fifteen pieces of each set will represent other conventional chessmen.

Because of the fact that the bottom of the board will generally have some ink thereon, it is desirable to leave the game-board in the ink pad compartment **24** at all times except when pressing it on a recording sheet or post card to show the move that has been made. To facilitate the removable of the transparent cover **32** while in the ink pad compartment **24,** a hinged front wall **62** is provided, hinged low enough to permit the cover **32** to slide thereover and high enough to keep the game-board **28** in the compartment **24** for moving the game pieces as desired. Then the cover **32** is slid back into position holding the pieces **30** in place, whereupon the cover **32** and game-board **28** are pressed down to ink the bottom indicia **46** and **48** of the board and the bottoms **54** and **56** of all game pieces **30** therein. Then, the entire assembly of board and game pieces is manually grasped on its sides, which extend above the sides of the adjacent compartment partitions **22** and removed for pressing on a recording sheet or standard size post card and then returned to the storage compartment **24.**

Inasmuch as the last or sixteenth chessman piece need never be removed from the board, end compartment storage racks **66** may be provided with only fifteen openings **68** to receive removed game pieces **30** therein, as when the game is chess. With other games, using more than sixteen pieces, the racks **66** will have an appropriate number of openings **68,** the pieces **30** being held in place in the rack openings **68** by the inside cover. In this case, eighteen openings are shown.

The hinged front wall **62** has an upstanding leaf spring or finger **64** to extend under the front ledge **70** of cover **14** to hold the wall **62** in closed position when the cover **14** is closed. Suitable cooperating male and female snap fasteners **72** on the front of the chest **12** and **74** on depending fingers **76** on the outside of ledge **70** are provided for retaining the cover **14** in closed position with the assembled game-board and pieces therein.

OPERATION OF THE INVENTION

The kit chest **12** is preferably of a size to contain standard size post cards **20** inside the cover **18** of chest cover **14,** and the board is of a size to graphically print the entire board and assembled pieces **30** on a postcard **20,** and thus is of a size that may be readily carried in one's pocket or handbag.

The kit may be used for playing with correspondents elsewhere. In such case, each player correspondent will have and use a complete kit **10** such as in this invention. Each may have a number of post cards **20** preaddressed to the other player. Then, each plays in turn, sliding off the cover **32** so he can move his piece, then presses the game board **28** and pieces **30** into the ink pad, then lifts the assembly out and stamps the post card and mails it, and possibly stamps another sheet of paper or page of a notebook to keep a record of his own play. The recipient of the card sets up his pieces to correspond to the card, records it, then makes his play and records it on a card to mail back to the first player, and this goes on until the game is completed. It is immaterial whether either player can understand the language of the other, or even the alphabet or number system of the other; there is no language barrier when playing the game by mail with the kit **10** of this invention.

This kit **10** may also be used in reporting tournament games. In such case, the reporter sets up his board **28** and pieces **30,** the same as the tournament players, and records each successive play on any suitable sheet of paper and thus has a graphic illustration of each and every play of the tournament game. Being small enough, it may also be carried in one's pocket or handbag, and different plays may be set up, studied and recorded. It may be also used in the same manner as any conventional chess game.

Obviously, the game-board and kit may be made of any desired size, such as a size to substantially fill a conventional sheet of correspondence paper, for instance. In addition to eliminating the need for a code system in playing by mail, it eliminates the mental effort of converting the move into the code, and then reconverting the code into the move, all with the attendant possibility of error.

ABSTRACT OF THE DRAWINGS

In the drawings, like numbers refer to like parts, and for purposes of explication, marshalled below are the numbered parts of the improved Game Apparatus for Playing and Recording Successive Plays in a Game.

10 game kit of this invention
12 chest or casing
14 cover
16 hinges
18 inside cover
20 post cards or recording sheets
22 compartment partitions
24 middle ink pad compartment also providing storage for assembled game-board
26 ink pad
28 game-board
30 game pieces
32 transparent retaining cover
34 board side tracks
36 inturned toes of legs **38**
38 cover legs
40 board black squares
42 white squares
44 playing area vertical opening
46 black square contact recording indicia at the bottom of board **28**
48 white square recording indicia
50 shank portion of a game piece
52 head portion
54 and **56** identifying recording indicia on the bottom of the shanks
58 and **60** identifying display on head portions
62 hinged front wall
64 upstanding finger to hold wall **62** in closed position
66 game piece racks and floors in end compartments
68 openings in **66** for game pieces
70 front ledge of cover
72 female snap fastener on the front of chest **12**
74 cooperating male snap fasteners on fingers **76** on cover **14**
76 fingers on cover **14** for male snap fasteners

Although this invention has been described in considerable detail, such description is intended as being illustrative rather than limiting, since the invention may be variously embodied, and the scope of the invention is to be determined as claimed.

Having thus set forth and disclosed the nature of this invention, what is claimed is:

1. A game apparatus for playing and recording successive plays in a game comprising, in combination:

a. a game-board (**28**) having playing areas (**40** & **42**) marked thereon,

b. said game-board including contact means (**46** & **48**) providing game-board playing areas identifying and recording indicia located on the bottom thereof,

c. a vertical opening (**44**) located in each playing area for receiving a playing piece (**30**),

d. playing pieces (**30**) each having an identifying head portion (**52**) disposed above the game-board and reduced shank means (**50**) to extend down through one of said vertical openings (**44**), each said vertical opening having a diameter smaller than said identifying head portion (**52**),

e. said shank means (**50**) including a contact means (**54** & **56**) providing identifying and recording indicia located on the bottom thereof,

f. cover means (**32**) removably mounted (**34, 36**) on said board (**28**) to hold said playing pieces (**30**) in their lowermost position with their recording indicia (**54, 56**) and said game-board recording indicia (**46, 48**) in the same plane permitting said game-board recording indicia and said pieces recording indicia (**54, 56**) to simultaneously engage with an ink pad means (**26**) or a recording sheet (**20**).

2. The game apparatus of claim **1,** said game-board recording indicia (**46** & **48**) being of a size to record on a standard post card (**20**).

3. The game apparatus of claim **1,** each playing area being in the form of a square (**42, 44**) of a chess board (**28**).

4. The game apparatus of claim **1,** comprising a slot (**34**) on each of two opposite sides of said game-board (**28**) and said game-board cover (**32**) having depending legs (**38**) and inturned toes (**36**) slidably engaging in said two slots (**34**) to hold said cover (**32**) over said game piece head portions (**52**), said legs (**38**) and toes (**36**) being of a height to hold said cover just over said game piece head portions (**52**) of game pieces (**30**) inserted through said openings (**44**) to maintain said game pieces recording indicia (**54, 56**) in the same plane with said game-board recording indicia (**46, 48**).

5. The game apparatus of claim 4, said cover (34) being of transparent material permitting said game piece identifying heads (52) and said game-board squares (46 & 48) to be visible therethrough.

6. The game apparatus of claim 1, including a carrying kit 10, said kit comprising an ink pad (26) compartment (24) for receiving or storing said game-board (28) therein, and game piece (30) storing compartment means (66, 68) therein.

7. The game apparatus of claim 6, said game piece storing compartment means having rack floor means (66) provided with openings (68) therethrough of a size to receive said game piece shanks (50) therethrough with said head portions (52) resting on said floor means (66).

8. The game apparatus of claim 7, and a cover (14) closeable on said kit (10), said cover (14) having recording sheet (20) storing means (18) therewith.

9. The game apparatus of claim 8, and standard post cards (20) storing said cover (14), said game-board recording indicia (46, 48) being of a size to record on a standard post card.

10. The game apparatus of claim 6, said ink pad compartment (24) having side walls (22) stopping at said game piece storing compartment floor means (66), permitting said covered game-board (28) to be readily manually grasped.

11. The game apparatus of claim 10, said ink pad compartment (24) having a hinged front wall (62) permitting said cover means (32) to be removed from said game-board (28) for providing access to the game pieces (30) in said board (28) while in said ink pad storing compartment (24).

12. The game apparatus of claim 11, means (64) on said hinged front wall (62) cooperating with said hinged cover (14) for holding said hinged front wall (62) in kit (10) closing position while said kit cover (14) is down in covering position, and means (72, 74, 76) for releasably retaining said kit cover in closed position.

13. The game apparatus of claim 12, and an inside cover (18) on said cover, said inside cover (18) providing a recording sheet storing means and also providing means retaining said pieces (30) in said rack floor openings (68).

* * * * *