(No Model.) 2 Sheets—Sheet 1.

C. M. KEMP.

WATER MOTOR.

No. 590,762. Patented Sept. 28, 1897.

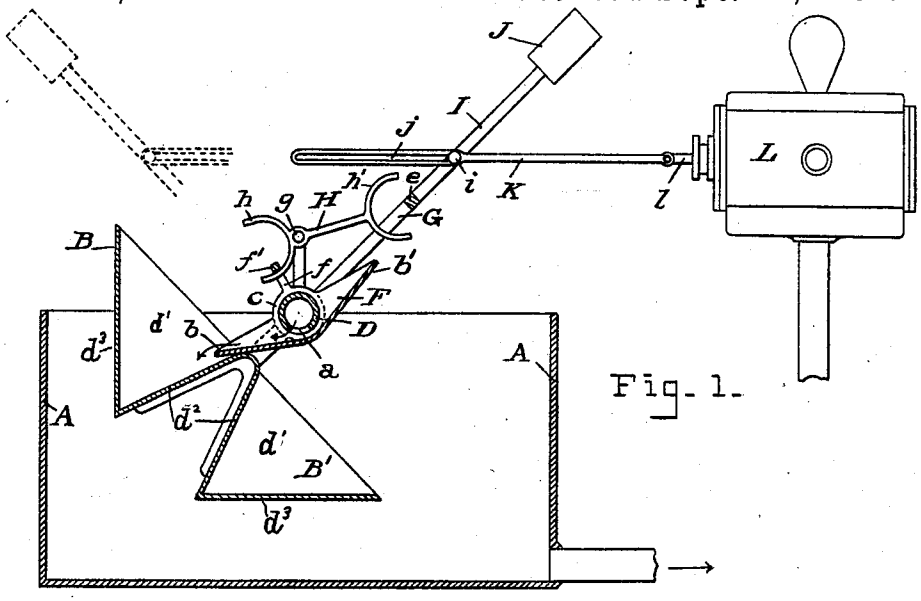

Fig. 1.

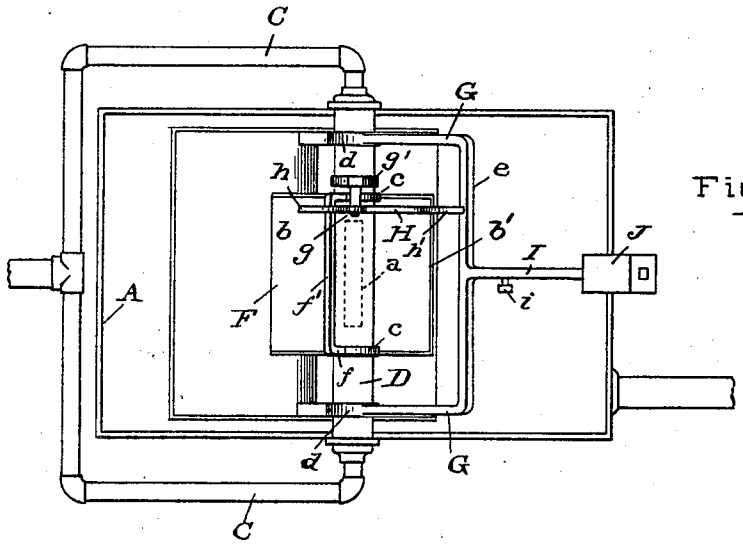

Fig. 2.

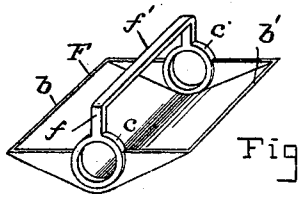

Fig. 3.

WITNESSES:—

Lee I. Van Horn.

Charles B. Manns Jr.

INVENTOR:—

Clarence M. Kemp.

By Chas B. Manns

ATTORNEY.

THE NORRIS PETERS CO., PHOTO-LITHO., WASHINGTON, D. C.

(No Model.) 2 Sheets—Sheet 2.

C. M. KEMP.

WATER MOTOR.

No. 590,762. Patented Sept. 28, 1897.

Fig. 4.

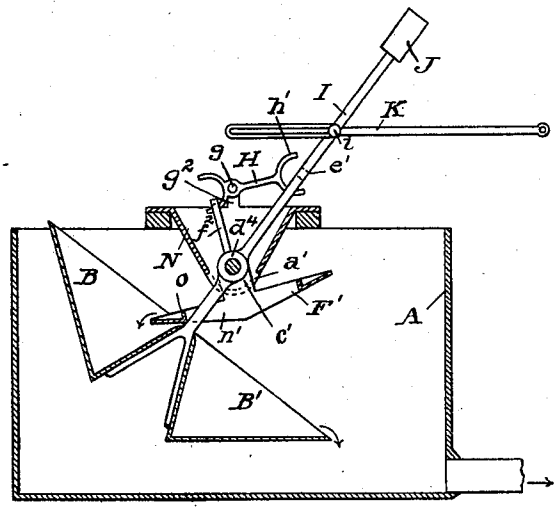

Fig. 5.

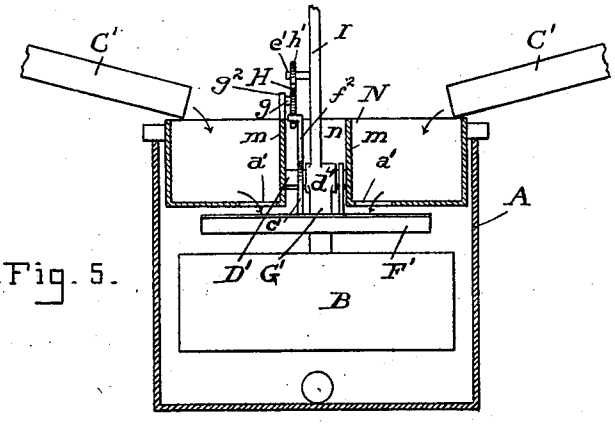

Fig. 6.

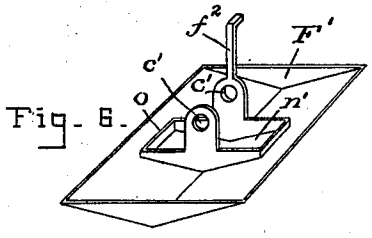

WITNESSES:-

Lee I. Van Horn.

Charles B. Manns Jr.

INVENTOR:-

Clarence M. Kemp

By Chas B. Manns

ATTORNEY.

THE NORRIS PETERS CO., PHOTO-LITHO., WASHINGTON, D. C.

UNITED STATES PATENT OFFICE.

CLARENCE M. KEMP, OF BALTIMORE, MARYLAND.

WATER-MOTOR.

SPECIFICATION forming part of Letters Patent No. 590,762, dated September 28, 1897.

Application filed December 26, 1896. Serial No. 617,002. (No model.)

To all whom it may concern:

Be it known that I, CLARENCE M. KEMP, a citizen of the United States, residing at Baltimore, in the State of Maryland, have invented certain new and useful Improvements in Water-Motors, of which the following is a specification.

This invention relates to a water-motor of that class which has as a distinguishing feature buckets which are mounted so as to oscillate and alternately receive and discharge water, the weight of the water being the actuating element. In my present invention I provide for supplementing the water weight by the action of a metal weight mounted on a lever which is connected with the water-buckets. It will be seen that the result of this feature of my invention when applying the power of the water-motor—for instance, to a pump—is to give an impulse to the pump-piston through the agency of the water weight and also the metal weight. This motor is especially adapted to be run by a stream of water where there is but a moderate supply and but slight fall.

The invention is illustrated in the accompanying drawings, in which—

Figure 1 is an elevation of the motor, partly in section and showing it applied to operate a pump. Fig. 2 is a top view of the motor. Fig. 3 is a perspective view of the oscillating chute. Fig. 4 is a sectional elevation showing a slightly-modified construction of the motor. Fig. 5 is an elevation, also partly in section, of the modified construction, but taken in a transverse direction from that shown in Fig. 4. Fig. 6 is a perspective view of the modified form of oscillating chute.

The motor may be mounted or supported on any suitable frame or base, but it has not been deemed necessary to show any particular form in the drawings.

In the present instance the walls of a box A serve as a support for the pipe D, and the buckets B B′ hang pendent from the pipe and oscillate within the box. A pipe C at each side supplies the water to fill the buckets. In Figs. 1, 2, and 3 the constantly-running water is supplied from the pipe C to a cross-pipe D, which extends from one side to the other of the box. At its under side this cross-pipe has a slot a, which is always open to discharge water into the oscillatory chute F. This chute has raised ends and sides of equal height and bottom inclined to the middle, where it is deepest, so as to hold water, and its two opposite edges b b' are the water-discharge edges. The chute has eyes c, by which it is supported and pivoted on the cross-pipe D. The chute is tilted by mechanism to be presently described, so that the water supplied by the pipe will be discharged alternately from one edge and then the other. The water-buckets B B′ each have two ends d' and two sides d^2 d^3, which latter form the bottom, the said two sides forming an approximately V shape in cross-section. The buckets are without valves and are rigidly attached to a suitable hanger, having eyes d, which pivot on the cross-pipe D, resting on the walls of the box A. By this construction each bucket when at its lowermost position will fully discharge its water contents. The pivot of both the chute and buckets have the same center or axis. In Figs. 1 and 2 the bucket-hanger G has a bail shape—that is, two side arms and a cross-bar e, connecting said arms. The pivot-eyes c of the chute have position between the two side eyes of the hanger.

A rigid knock-arm f projects upward from the chute. In Figs. 1, 2, and 3 an arm is at each end and has a horizontal part f', which extends from one end to the other like a bail or handle. An oscillatory chute-shifter H is pivoted at g and moves in a vertical plane. In this instance the pivot g is fixed to a collar g', which surrounds the cross-pipe D. This chute-shifter has a fork at each end. One of these forks h has position to take astride of or engage the knocker-arm f' on the chute and the other fork h' has position to engage or take astride of the cross-bar e, connected with the bucket-hanger G. As the buckets B B′ oscillate in one direction—for instance, to raise the bucket B—the cross-bar e will contact with one fork h' of the shifter and throw the latter on its pivot g, thereby causing the other fork h to contact with the knocker-arm f' of the chute and tilt the latter in the reverse direction—that is, to

lower its discharge edge *b* directly over the said raised bucket B. (See Fig. 1.) In the position just described water falling from the pipe D onto the chute F will thereby be directed into the elevated bucket at the same time that the lowered bucket B′ is discharging its water. An arm or lever I is rigidly connected with the hanger G and projects upward. As the buckets and hanger vibrate this arm I also vibrates. A metal weight J is mounted on the upper end of this arm, and this is the weight which supplements the weight of the water that is in one of the buckets, as will be presently explained. The arm or lever I has a stud *i* projecting laterally from its side. A rod K has a longitudinal slot *j*, which takes on the stud *i*, and this rod connects with the piston-rod *l* of the pump L.

The motor operates as follows: When one bucket B is raised and filling with water, the other bucket in the lowered position will be discharging, and the arm I, which carries the weight J, will be thrown toward the same side as the lower bucket. At the instant the bucket is raised the chute F, full of water, is tilted by the action of the shifter H, so as to empty its water into the elevated bucket, and the chute for the time being retains this tilted position, and the water flowing from the pipe D onto the chute while thus inclined will be directed into the same bucket. When this bucket becomes full, the weight of the water causes the two buckets to swing to the other side, forcing the empty bucket up and throwing the arm I and its weight and the stud *i* on the arm sliding in the slot *j* until it comes to the end of the slot, whereupon the momentum of the swinging water weight and metal weight will take sudden effect on the rod K and move said rod, and of course move the pump-piston. The operation just described will then be repeated as soon as the elevated bucket fills and both buckets will swing again. Of course it is immaterial which end of the rod K is slotted, but it is necessary that one end of said rod shall have a limited sliding connection.

In Figs. 4, 5, and 6 the motor is somewhat modified in its details of construction, but the operation is the same. In this form the water is supplied by two pipes or troughs C′, which deliver the constantly-running water into a receiver N, supported on a box A and extending across from one side to the other. The receiver has two compartments, each of which has in its bottom an opening *a*′, which delivers the water onto the oscillatory chute F′. The adjacent walls *m* of the two compartments are separated by an open space *n*, and a fixed shaft D′ spans this space. The buckets in Figs. 4 and 5 are substantially of the same form and construction as in the first figures, and the hanger G′, which supports the buckets, has an eye d^4 pivoted on the fixed shaft D′. In this case the hanger has only one arm, the forked ends of which, pendent below the pivot, are attached at the middle of the buckets. The oscillatory chute F′, as shown, differs in construction from the chute shown in the first figures in that it has a central opening *n*′, around which is a raised curb or wall *o*. This chute has eyes *c*′, by which it is pivoted on the fixed shaft D′. The position of this chute is directly below the water-delivery openings *a*′. A knock-arm f^2 projects upward from the chute and is acted on by an oscillatory shifter H, which has the same construction as shown in the first figures. The pivot *g* of the shifter in this case is fixed on a stud g^2, projecting up from the framework of the receiver. The arm I, which carries on its upper end the weight J, is attached to the eye d^4 of the hanger. In its movement this arm vibrates in the open space *n* between the two compartments of the receiver. This arm has a lateral short bar *e*′, which contacts with the fork *h*′ of the shifter H. The arm I has the stud *i*, and a slotted rod K connects therewith, same as in Fig. 1. As already stated, the operation of this modified construction is the same as that shown in the first figures.

Having thus described my invention, what I claim is—

1. In a water-motor, the combination of a hanger pivoted and having ends pendent below said pivot to which two water-buckets are attached; an open-top chute pivoted above the two buckets so as to oscillate and discharge water alternately in that one of the two buckets which is elevated; and an oscillatory chute-shifter which is independently pivoted and coacts between the said bucket-hanger and chute, as set forth.

2. In a water-motor, the combination of a hanger pivoted and having ends pendent below said pivot; two valveless water-buckets rigidly attached to said pendent hanger ends—each of said buckets having two ends and two sides which also form the bottom, said sides forming an approximate V shape in cross-section; an oscillatory chute above the two buckets and which discharges water alternately in that one of the two buckets which is elevated; and means to tilt the said chute so that one side of the chute will be tilted down at the time that the corresponding bucket is tilted up, as set forth.

3. In a water-motor, the combination of a hanger pivoted and having ends pendent below said pivot to which two water-buckets are attached; an oscillatory chute above the two buckets and which discharges water alternately in that one of the two buckets which is elevated; an arm rigidly connected with the hanger and projecting upward above the motor and carrying a weight; and an oscillatory chute-shifter pivoted independently of the hanger and chute and one end of which is actuated by the movement of the said hanger while the other end causes the chute to tilt, as set forth.

4. In a water-motor, the combination of a water-receiver having a delivery-opening in its bottom; a pivoted hanger carrying water-buckets which are below the water-receiver; and an oscillatory chute movable independent of the water-buckets and which discharges water alternately into that one of the buckets which is elevated—the pivot of both the hanger and chute having the same center or axis, as set forth.

In testimony whereof I affix my signature in the presence of two witnesses.

CLARENCE M. KEMP.

Witnesses:

CHAPIN A. FERGUSON,

CHARLES B. MANN, Jr.