March 4, 1969 B. SKAUGEN 3,430,319

NONDEFLECTION SUPPORT FOR WEB CARRYING ROLL

Filed Aug. 15, 1966

Fig-1

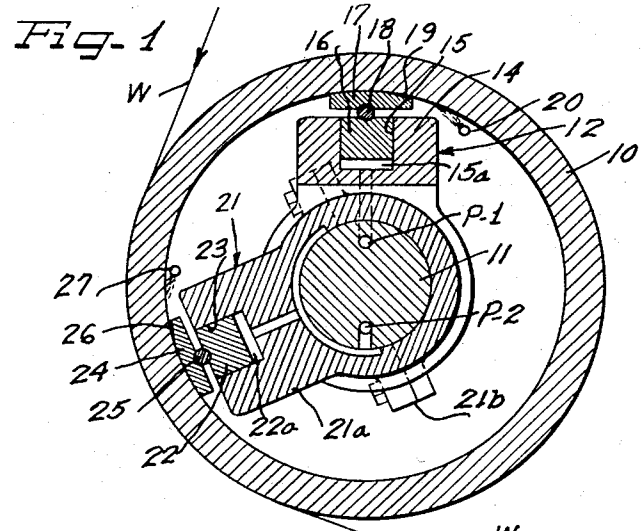

Fig-2

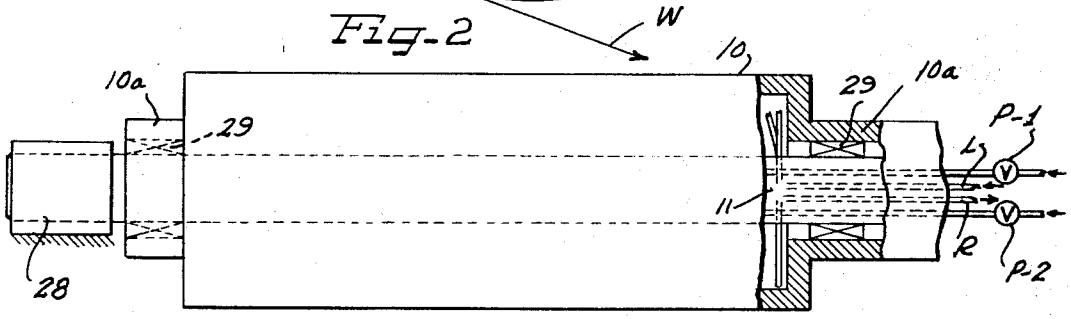

Fig-3

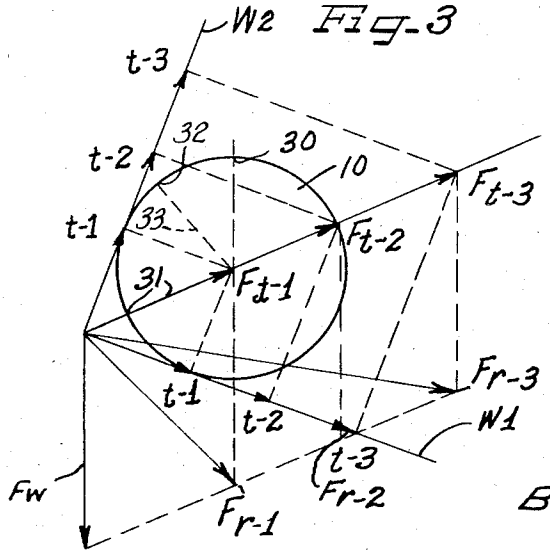

INVENTOR.
Borg Skaugen

BY Hill, Sherman, Meroni, Gross & Simpson ATTORNEYS

United States Patent Office

3,430,319

Patented Mar. 4, 1969

3,430,319

NONDEFLECTION SUPPORT FOR WEB CARRYING ROLL

Borg Skaugen, Beloit, Wis., assignor to Beloit Corporation, Beloit, Wis., a corporation of Wisconsin

Filed Aug. 15, 1966, Ser. No. 572,425

U.S. Cl. 29—116 5 Claims

Int. Cl. B21b *13/00*

ABSTRACT OF THE DISCLOSURE

A rotary roll shell supported interiorly along its length at circumferentially spaced locations such as by a sliding flexible shoe supported by piston in a cylinder carried on a stationary axially extending shaft.

The present invention relates to improvements in web carrying rolls and more particularly to supports for rolls of the type used for carrying Fourdrinier wires in paper making machines.

In paper making machines having traveling wires for receiving the pulp suspension and dewatering the pulp the wires are carried on rolls which should have a minimum of deflection. Deflection of the rolls causes bending of the wire and resultant wear and breakage. This is particularly a problem in paper machines of increasing wider widths, and the breast roll, couch roll and other rolls must be made of increasing strength to avoid deflection. While the features of the present invention are particularly applicable and useful in wire supporting rolls in a paper machine, they are also applicable and useful in other roll installations where a roll must carry and support a traveling web element and in the specification and claims the term "web" is used generically to refer to a web member which is carried by a roll.

An object of the present invention is to provide an improved roll assembly structure which is capable of carrying heavy loads without bending and is particularly useful in rolls used to carry a traveling Fourdrinier wire.

Another important object of the invention is to provide a roll structure particularly adapted for use in carrying a wire in a Fourdrinier machine wherein a hollow roll shell is employed supported from within the shell the support capable of handling different loads on the roll.

A still further object of the invention is to provide an improved roll assembly wherein a hollow roll shell is used supported from within so that the loads on the roll shell are transmitted to a stationary shaft member within the roll shell and the support is capable of accommodating loads of forces on the roll shell which are changeable either in direction or size or both.

A still further object of the invention is to provide an improved support structure for a rotatable roll shell capable of carrying a traveling web wherein the support structure can carry heavy loads and has a long wearing life so as to be able to operate continuously over years of operation and not require shutdown for adjustment or repair.

Other objects, advantages and features will become more apparent with the teaching of the principles of the invention in connection with the disclosure of the preferred embodiments of the invention in the specification and drawings in which:

FIGURE 1 is a vertical sectional view shown somewhat schemtaically, illustrating a roll assembly embodying the principles of the present invention;

FIGURE 2 is an elevational view of the roll of FIGURE 1 with portions broken away; and

FIGURE 3 is a force diagram illustrating forces on the roll from weight of the roll and tensions on the web wrapping the roll.

In the drawings:

FIGURES 1 and 2 illustrate a roll shell **10** supporting a traveling web or wire W which is under tension. The roll shell **10** may be employed as the return roll for carrying the wire in a Fourdrinier machine or the principles may be employed in the breast roll, couch roll or tension rolls in the Fourdrinier machine and the principles may also be employed in felt carrying rolls or other rolls in a paper machine, or other machine wherein traveling webs or belts are carried.

Instead of making a roll which is sufficiently strong to support a wire W under tension without excessive deflection, or instead of providing backup supports exterior of the roll, the roll **10** is hollow and relatively light weight and supported from the inside to prevent bending. However it will be appreciated by those versed in the art, in a Fourdrinier wire the tension is regulated and changed with different operating conditions so that the forces on all of the wire carrying rolls are changed. The total forces on each of the rolls are the combined forces of the weight of the roll and the weight of the wire plus the force of the wire tension as it wraps the roll. Another factor which may be encountered in some installations is the change of angle of wrap of the wire on the roll. For example in a roll adjacent a wire tensioning roll, the total angle of wrap will vary with the length of the wire and the stretch of the wire as the tension changes. Although the change in tension forces in some instances may be small, the present invention contemplates providing a support for the interior of the roll shell which will act along a line which is at the exact angle of the resultant force line due to the tension of the wire.

The present invention also contemplates applying a support force within the roll shell or supporting the weight of the shell and the weight of the wire carried thereby. In some instances depending upon the location of the roll, the weight of the wire may be taken as negligible so that the internal support basically functions to support the weight of the roll shell.

As shown in FIGURE 1, a first support means **12** is provided for carrying the weight of the roll shell (and the weight of the wire carried thereby). A second support means **21** is provided for applying a force within the roll shell to support the force of the tension of the wire W.

The support means **12** and **21** transfer the force of the roll shell **10** to a stationary center shaft **11** which is supported at its ends but can deflect within the roll shell.

In a preferred form the support means **12** for supporting the weight of the roll shell **10** includes an elongate casting **14** coextensive with the roll shell and having an elongate axially extending chamber **15** therein with a piston **16** mounted within the chamber.

A sliding shoe **17** is supported on the piston **16** such as by a cylindrical pin **18** extending along axially between the piston and shoe. Arcuate recesses are formed on the underside of the shoe and on the upper side of the piston for seating of the pin **18**.

The outer surface of the shoe is circumferentially arcuate at the radius of the inner surface of the roll shell and has its leading or nose end relieved at **19** so as to gather a lubricating film of oil between the shoe and the shell. To insure that oil will be available within the inner surface of the shell an oil depositing spray **20** is provided along within the shell head of the shoe **17**.

Actually while the shoe may be considered as supportingly engaging the inside of the roll shell, a film of oil forms between the shoe and inner surface of the shell so that the shell is hydraulically supported by a dynamic

film of oil. This film of oil will have a non-uniform pressure curve across the surface of the shoe in a circumferential direction with the oil film pressure increasing from the nose **19** to a point of maximum pressure ahead of the trailing edge of the shoe and from the point of maximum pressure the pressure drops off. The support pin **18** is preferably positioned so that it will be at the effective force center of the dynamic oil film between the shoe and the inner surface of the shell (or in other words at the center of gravity of the oil pressure curve.)

The casting **14** is adjustable circumferentially on the stationary shaft **11** and is positioned substantially vertical so it supports the weight of the roll shell and the effective force line of the shoe **17** acting on the shell through the rotational center of the roll shell.

The second support means **21** includes a casting **21***a* which is mounted on the shaft **11** and is circumferentially adjustable thereon such as by having a split collar arrangement with flanges such as shown at **21***b* which have bolts or other securing means to securely clamp the casting **21***a* in its predetermined circumferentially located position.

The casting **21***a* has an axially extending chamber **23** with a piston **22** mounted therein supporting a sliding shoe **24**. An axially extending pin **25** seats in recesses in the shoe **24** and piston **22**.

The shoe has an arcuate outer surface of the inner circumference of the roll shell, and a lead edge is relieved at **26** to form a supporting film of oil between the outer surface of the shoe and the inner surface of the roll shell **10**. To insure that oil is present for forming the film a spray **27** is mounted within the roll shell ahead of the shoe **24**. The sprays **20** and **27** for forming the lubricating film are supplied with a oil supply line shown at L in FIGURE 2.

Hydraulic fluid under pressure is directed into the spaces **15***a* and **22***a* beneath the pistons **16** and **22** respectively through lines P–**1** and P–**2**. Suitable lines and connections are provided so that pressurized oil can be directed beneath the pistons and so that the lines will maintain connection with rotational adjustment of the castings **14** and **21***a* relative to the shaft **11**.

As shown in FIGURE 2, the central shaft **11** is supported at its end with a support **28** shown at one end and the support at the other end not shown. The roll shell is provided with reduced diameter ends **10***a* and centering bearings **29** are provided between the ends **10***a* and the shaft **11**.

Suitable connections are provided for the oil lines to the interior of the roll shell through the shaft. Lubricating oil is supplied through the line L, and a return line R may be provided so that oil can be circulated to maintain a controlled temperature if desired, and to carry away any oil which may leak past the pistons **16** and **22**.

Operation of the structure is contemplated in the manner shown in FIGURE 1 wherein one support shoe **17** supports the weight of the roll shell and another support shoe **24** supports the force caused by the tension of the wire W. Another form of operation is contemplated wherein the shoe **17** and its supporting members are omitted and only one support shoe **24** is employed. In this form of operation the shoe **24** is positioned along the resultant force line which equals the total of the force of the weight of the roll shell and the force of wire tension. These two forms of operation may be illustrated in connection with FIGURE 3.

In FIGURE 3 the force due to the weight of the roll is shown at F*w*. This will remain constant in any given machine operation and that when this is determined the pressure of the oil delivered through line P–**1** beneath the piston **16** can be determined and maintained constant. The shoe **17** will engage the inside of the roll shell at point **30** which intersects the inner surface of the roll shell at a vertical line drawn through the roll center.

The resultant force line due to the tension of the wire

W will be determined after the angle of wrap of the wire is determined. The force lines due to tension will act along lines W**1** and W**2**. These will be substantially equal if the roll **10** is idling but will not be equal if the roll is a driving roll and the roll is driven in rotation. FIGURE 3 shows the tensions to be equal and at a low tension the tensions caused by the onrunning and offrunning wire are *t*–**1** with the resultant total force being F*t*–**1**. The shoe **24** is adjusted in position so that it engages the inner surface of the roll shell **10** at location **31** which is the intersection of the force line F*t*–**1** and the roll shell.

The hydraulic pressure directed to the space beneath the piston **22** through line P–**2** is controlled so that it applies a force to the shoe F*t*–**1**. If the tension increases such as shown by the vector *t*–**2**, the force is increased to equal F*t*–**2**. Similarly if the tension increases to equal the vector *t*–**3** then the force is increased to F*t*–**3**.

If the weight supporting shoe **17** is eliminated and a single support shoe is employed, then the force vector which is the result of the force of the weight F*w* and the force of the tension F*t*–**1** must be drawn, as shown at F*r*–**1**. The oil pressure in the chamber **22***a* is then adjusted so that a force is applied to the inside of the shell equal this force F*r*–**1**. The position of the shoe **24** is circumferentially adjusted to be located at point **32**. This point is determined by drawing a line **33** through the center of the roll shell parallel to the force resultant line F*r*–**1**.

Similar adjustments in force and position of the shoe **24** must be made for resultant lines F*r*–**2** for a change in tension to *t*–**2**. Similarly for a change in tension to *t*–**3** a force resultant F*r*–**3** is drawn and a hydraulic pressure chosen accordingly, and the circumferential location of the shoe **24** adjusted accordingly.

Thus it will be seen that I have provided a roll assembly which is capable of maintaining a supporting roll for a traveling web axially straight during changes in tension of the web or during changes in angle of wrap of the web. The forces on the roll shell due to its weight and due to web wrap are both accommodated and the structure is easily adjusted to the circumstances of different locations in a machine or different operating conditions.

The drawings and specification present a detailed disclosure of the preferred embodiments of the invention, and it is to be understood that the invention is not limited to the specific forms disclosed, but covers all modifications, changes and alternative constructions and methods falling within the scope of the principles taught by the invention.

I claim as my invention:

1. A roll assembly for carrying a traveling web comprising,

a rotatable roll shell for supporting an endless web wrapping the shell,

first and second circumferentially spaced roll shell support means each supportingly engaging the inner surface of the roll shell and applying a supporting force adequate for supporting the combined forces of weight of the shell and web and the tension of the web,

and said first support means be in a position to exert a radial force on the shell equal and opposite to said weight force,

and said second support means be in a position to exert a radial force on the shell equal and opposite to the tension force of the web.

2. A roll assembly for carrying a traveling web in accordance with claim **1** wherein said second support means is circumferentially adjustable to accommodate change of angle of the web relative to the roll shell.

3. A roll assembly for carrying a traveling web in accordance with claim **1** wherein said second support means is provided with a controllably variable pressure means for applying a predetermined radial force on the shell at the location of said second support means.

4. A roll assembly for carrying a traveling web in accordance with claim 1 wherein each of the support means includes a sliding shoe substantially co-extensive with the roll shell,

lubricating means for forming a film of lubricant between the shoes and the shell, and

a piston and a chamber for each of the shoes extending supportingly beneath the shoe and the chamber having means for providing it with a fluid at a controllably variable pressure.

5. A roll assembly for carrying a traveling web in accordance with claim 1 wherein said support means include a stationary supporting shaft extending axially through the roll shell and fluid force transmitting means between the shaft and shell for supporting the shell and transmitting the forces therefrom to the shaft uniformly along the length of the roll shell.

References Cited

UNITED STATES PATENTS

2,261,740	11/1941	Makarius	29—116
2,854,700	10/1958	Caspari et al.	
3,106,153	10/1963	Westbrook	100—155
3,119,324	1/1964	Justus	100—170
3,131,625	5/1964	Kusters et al.	100—170
3,146,160	8/1964	Kankaanpaa.	
3,168,435	2/1965	Beachler	162—348

FOREIGN PATENTS

893,426	4/1962	Great Britain.

BILLY J. WILHITE, *Primary Examiner.*

U.S. Cl. X.R.

100—170; 162—348