Jan. 5, 1943. R. J. WHITE 2,307,087

CONTAINER

Filed Sept. 16, 1939

Fig. 1

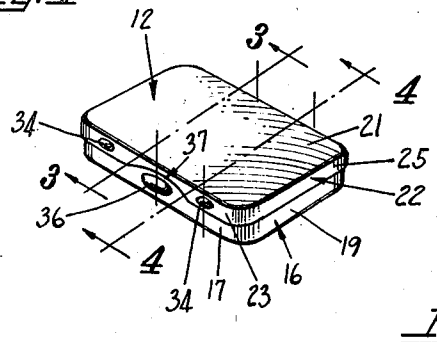

Fig. 2

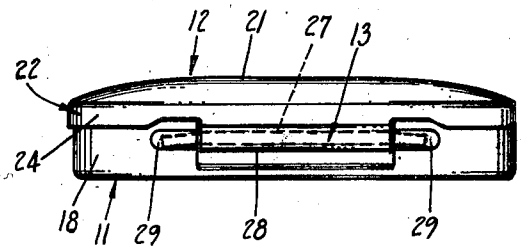

Fig. 5

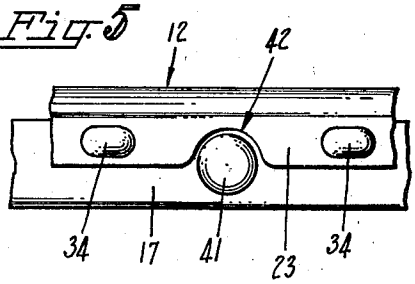

Fig. 3

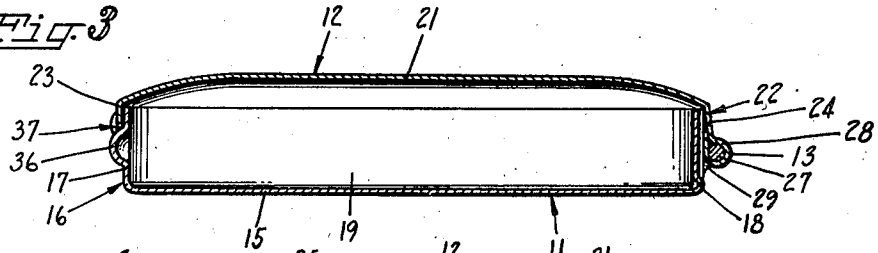

Fig. 4

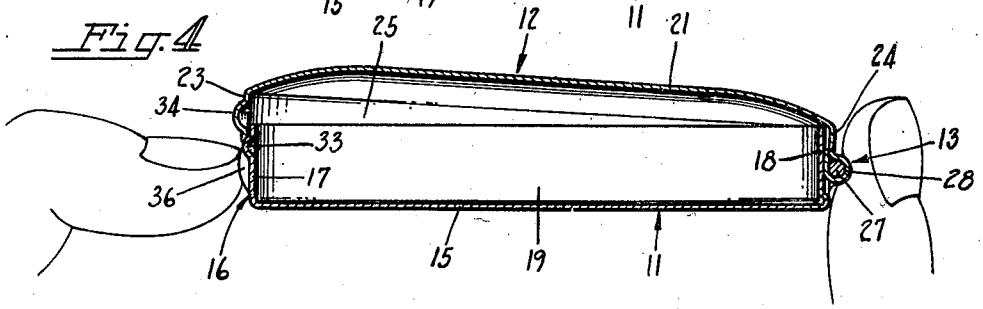

INVENTOR.
Richard J. White
BY Dean A. Thornburgh
Charles H. Clyde
ATTORNEYS

Patented Jan. 5, 1943 2,307,087

UNITED STATES PATENT OFFICE

2,307,087

CONTAINER

Richard J. White, New York, N. Y., assignor to American Can Company, New York, N. Y., a corporation of New Jersey

Application September 16, 1939, Serial No. 295,339

4 Claims. (Cl. 220—35)

The present invention relates to containers such as hinge cover tablet boxes and the like and has particular reference to releasing the cover from a closed and locked position so that the box may be readily opened.

An object of the invention is the provision of a hinge cover tablet box or the like wherein the front edges of the box cover and body are formed with locking nodes and a pressure opening projection so that a pressure applied on the projection at the front edge of the body will spring it inwardly sufficiently to release the locking nodes and thereby permit easy opening of the cover by a hinging action thereof.

Another object is the provision of such a tablet box wherein the cover is secured in place by a pintle hinge, the pintle of which is retained under tension so that when the cover is released from a closed position, the tension in the pintle will quickly snap the cover open into a partially opened position where it will remain until further opened by hand.

Numerous other objects and advantages of the invention will be apparent as it is better understood from the following description, which, taken in connection with the accompanying drawing, discloses a preferred embodiment thereof.

Referring to the drawing:

Figure 1 is a perspective view of a tablet box embodying the instant invention, the view showing the cover of the box in closed position;

Fig. 2 is an enlarged rear elevation of the box shown in Fig. 1;

Figs. 3 and 4 are enlarged sectional views taken substantially along planes indicated by the lines 3—3, 4—4 in Fig. 1, the two views showing the cover in different positions, Fig. 4 illustrating portions of a hand in the act of initially opening the box; and

Fig. 5 is an enlarged fragmentary front elevation of a modified form of the box shown in Fig. 1.

As a preferred embodiment of the instant invention, the drawing illustrates a rectangular shaped sheet metal tablet box which includes a body member 11 and a cover member 12 permanently connected by a pintle hinge 13. These box members are preferably of a shallow, one-piece die drawn construction.

The body member 11 comprises a flat bottom wall section 15 (Fig. 3) which at its outer edges merges into a continuous, surrounding upright wall 16. The upright wall includes a front wall section 17, a rear wall section 18 and a pair of connecting side wall sections 19.

The cover member 12 comprises a semi-flat-tended, dome shaped top wall section 21 which at its outer edges merges into a continuous, surrounding and depending flange wall 22. The flange wall includes a front wall section 23, a rear wall section 24, and a pair of connecting side wall sections 25. When the cover is in closed position on the body these depending cover wall sections extend down adjacent to and outside of the corresponding wall sections of the body.

The hinge 13 preferably includes a straight wire pintle 27 (Figs. 2 and 3) which is tightly secured in a hinge lug 28 formed in the rear wall section 24 of the cover. The ends of the pintle extend beyond the cover hinge lug 28 and are disposed in a pair of spaced hinge lugs 29 formed in the rear wall section 18 of the body 11.

The rear wall section 18 of the body, if desired, may be offset or flexed inwardly a slight distance at its intermediate portion to accommodate and insure clearance for the inner terminal portion of the cover hinge lug 28, in which the pintle 27 is tightly secured, as best seen in Figs. 3 and 4.

When the cover is in closed position the inside surface of the top wall section 21 adjacent the hinge engages against the top edge of the body rear wall section 18 or at the opposite end portions of the latter and hence raises the cover hinge lug 28 slightly out of alignment with the body hinge lugs 29. This springs the wire pintle into a curved position as shown in Fig. 2 and thus puts the pintle under a tension so that opening of the cover as hereinafter explained will be facilitated.

The cover is locked against accidental opening when in closed position on the body. For this purpose the body front wall section 17 is provided with a pair of spaced outwardly projecting nodes or projections 33 (Fig. 4). Similar nodes or projections 34 (see also Fig. 1) are formed in the cover front wall section 23. These two pairs of nodes engage or lock together when the cover is in closed position and thus retain the cover against inadvertent opening.

Provision is made for easy opening of the cover when desired. This is effected by means of an outwardly extending button 36 (Figs. 1, 3 and 4) which is formed in the front wall section 17 of the body 11. The button is located in the middle of the wall section, between the two spaced locking nodes 33. This button is preferably of oval or wheat shape as shown in Fig. 1 so that it is more easily actuated by thumb pressure. The front wall 23 of the cover is relieved

or cut away in an arcuate or curved clearance section **37** in order to clear the button and facilitate easy engagement and manipulation thereof.

A slight thumb pressure on the button **36** while holding the back edge of the box with forefinger and middle finger, moves the front wall section **17** of the body inwardly sufficiently to disengage the body nodes **33** from the cover nodes **34**, thereby releasing the cover for its initial opening. This releasing of the cover permits the hinge pintle to spring back into its original straight position and in so doing it snaps the cover upwardly into its initial or partially opened position as hereinbefore mentioned and as shown in Fig. 4. The initially opened cover may thereupon be grasped with the other hand and raised into a fully open position to gain access to the box interior.

Upon closing the cover it may be again locked into position by a mere pinching of the box along its front edges. This action will snap the locking nodes into re-engagement and thus lock the cover in place.

Fig. 5 illustrates a slightly different embodiment of the invention involving a slightly different shape as to some parts without in any way altering the operation. In this modified form a round opening button **41** is substituted for the wheat shaped button in the front wall **17** of the body **11** and a rounded clearance section **42** is provided in the cover front wall **23** to correspond with such a button. In some respects the rounded button provides a broader base for thumb engagement in opening the box but otherwise acts in the same manner as the wheat shaped button.

It is thought that the invention and many of its attendant advantages will be understood from the foregoing description, and it will be apparent that various changes may be made in the form, construction and arrangement of the parts without departing from the spirit and scope of the invention or sacrificing all of its material advantages, the form hereinbefore described being merely a preferred embodiment thereof.

I claim:

1. A hinge cover tablet box or the like, comprising a body member having front and rear walls, a cover member also having front and rear walls telescoping over said body member walls, hinge elements including a wire pintle disposed and housed within the rear walls of the body and the cover members for permanently securing said members together and for allowing hinging movement of the cover member relative to the body member, a pair of spaced cover locking nodes formed in the front walls of each of said members for locking the cover in closed position, and a projecting button formed on the front wall of the body member and located between the locking nodes thereof so that pressure applied to the button will force the front wall of the body member inwardly sufficiently to disengage said body nodes from said cover nodes, rear walls of the body and cover members housing said wire pintle being arranged and dimensioned relative to each other so that said pintle is distorted and thereby placed under spring tension by a pulling action exerted thereon when the cover is in closed and locked position, said cover being partially opened when said body nodes are disengaged by the spring tendency of said pintle to resume its normal shape.

2. A hinge cover tablet box and the like, comprising a body member and a cover member hingedly connected thereto by means of a normally straight resilient pintle secured at its opposite ends to one of said members and at its intermediate portion to the other of said members, and means for securing said members in closed position, the said hinge connection being such that when the cover is closed a portion of the same engages a wall of said body member at the rear thereof with sufficient pressure to spring said pintle out of line and place the same under tension, whereby inward pressure exerted upon said box adjacent said securing means to release the same from engagement permits said pintle to resume its normally straight position and raise said cover to elevated position by a rocking movement about said engaged portions of said members as a fulcrum.

3. A hinge cover tablet box and the like, comprising a body member and a cover member hingedly connected thereto by means of a normally straight resilient pintle secured at its opposite ends to said body member and at its intermediate portion to said cover member, and latch members at the front of the box for resiliently securing said members in closed position, the said hinge connection being such that when the cover is closed the top wall of the same engages the rear wall of said body member with sufficient pressure to draw the intermediate portion of said pintle out of alignment with the opposite ends thereof and place the same under spring tension, whereby inward pressure exerted upon the front of said box to release said latch members from engagement permits said pintle to resume its normally straight position by virtue of its inherent spring tension to raise said cover to partially open position by a rocking movement about said engaged portions of said members as a fulcrum.

4. A hinge cover tablet box and the like, comprising a body member having upstanding walls and a cover member having a depending flange wall enclosing the walls of said body member, said cover member being hingedly connected to said body member by means of a normally straight resilient pintle secured at its opposite ends to spaced lugs on the rear wall of said body member and at its intermediate portion to an intermediately disposed lug on said cover member, spaced integrally formed outwardly extending projections on the front walls of said body and cover members adapted to be resiliently engaged to releasably secure said members in closed position, and an outwardly extending button on said body member disposed between said projections and adapted to be manually engaged to yieldably press the front wall of said body member inwardly to disengage said projections, the said hinge connection between said body and cover members being such that when the cover is closed the rear of the top wall of the same engages the rear wall of said body member with sufficient pressure to flex the intermediate portion of said pintle outwardly out of alignment with the opposite ends thereof and place the same under spring tension, whereby inward pressure exerted upon said button to release said projections from engagement permits said pintle to return to its normally straight position by virtue of its inherent spring tension, thereby raising said cover to partially open position by a rocking movement about said engaged portions of said body and cover members as a fulcrum.

RICHARD J. WHITE.