(No Model.)

C. GIFFORD.

COMBINED MOP TUB AND MOP WRINGER.

No. 590,144. Patented Sept. 14, 1897.

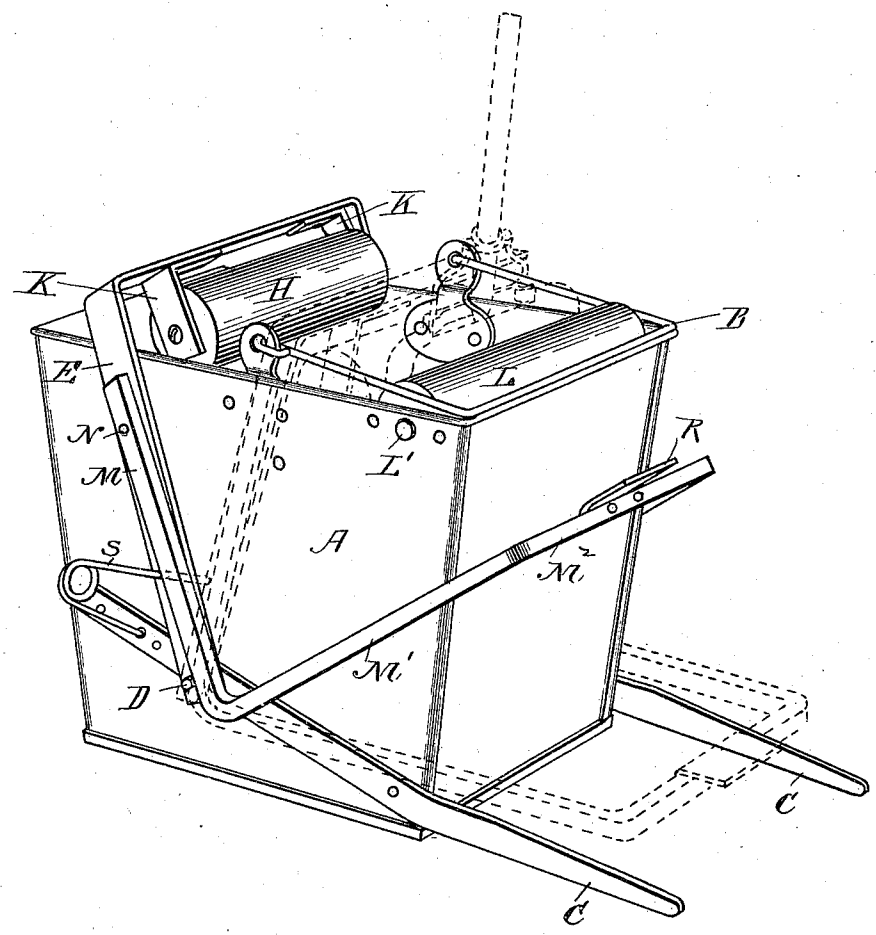

WITNESSES

Frank G. Parker.
William H. Parry.

INVENTOR

Charles Gifford

THE NORRIS PETERS CO., PHOTO-LITHO., WASHINGTON, D. C.

UNITED STATES PATENT OFFICE.

CHARLES GIFFORD, OF GARDINER, MAINE, ASSIGNOR, BY MESNE ASSIGNMENTS, TO THE MASSACHUSETTS WRINGER COMPANY, OF PORTLAND, MAINE.

COMBINED MOP-TUB AND MOP-WRINGER.

SPECIFICATION forming part of Letters Patent No. 590,144, dated September 14, 1897.

Application filed February 1, 1897. Serial No. 621,527. (No model.)

To all whom it may concern:

Be it known that I, CHARLES GIFFORD, of Gardiner, in the county of Kennebec and State of Maine, have invented a new and useful Improvement in a Combined Mop-Tub and Mop-Wringer, of which the following, taken in connection with the accompanying drawing, is a specification.

My invention relates to an improvement in a combined mop-tub and mop-wringer; and it consists in so improving the construction that a yielding pressure is brought to bear on the mop and that the device is inexpensive to make and very desirable.

The invention is illustrated in the accompanying drawing, which shows it in perspective.

The tub A is preferably made in the form shown, although the exact shape and dimensions may be varied to suit the use to which it is to be applied. For convenience in carrying the tub it has a bail B.

Reinforcing and stay bars C C are firmly riveted to the sides of the tub. These bars extend beyond the side of the tub, as shown, for the purpose of preventing the tub from falling over when the wringing apparatus is being used, as will be explained. The reinforcing-bars C C also serve as supports for the pins D, by which the hanger E of the moving wringer-roller H is attached to the tub. It will be observed that the hanger E, to which the moving wringer-roller H is attached, is in the shape of a bail and is free to swing, so as to carry the wringer-roller forth and back. The wringer-roller H is connected to the hanger E by means of angle-pieces K and K.

The stationary wringer-roller L is pivoted to the sides of the tub by small journals, one of which is shown at L'. The hanger E is drawn back by the spring S when not in use, so that the mop may be placed in the tub between the wringer-rollers without inconvenience. Guards may be used for keeping the mop from being entangled with the wringer-rollers. These guards are not shown, as they are not new.

The device for bringing the moving wringer-roller H forward to its working position consists of a strong steel spring-lever M M' M^2, bent as shown. This spring-lever is connected at its ends by rivets to the hanger E. One of these rivets is shown at N. The bent spring-lever has bearings on the pins D, which project from the reinforcing-bars C C, as shown. The spring-lever has a foot-piece R.

The action of my wringer is as follows: The mop is placed in the tub, resting on the stationary roller L. Now the operator places his foot on the foot-piece R and by depressing it causes a lever action (the pins D acting as fulcrums) to be exerted on the hanger E. This will cause the roller H to move toward the roller L and to compress the mop between them. Now by pulling the mop out, drawing it between the rollers, the water is forced out of it and it is left comparatively dry. By combining the steel spring-lever M M' M^2 with the wringer-hanger E and the pins D, I obtain a yielding pressure for the wringer-roller, so that they act with much more efficiency than they would if they were operated by a simpler lever.

I claim—

In a combined mop-tub and mop-wringer a stationary roller attached to the tub, a moving roller adapted to form with the said stationary roller a wringer, a swinging hanger in which the said moving roller is pivotally hung, the said swinging hanger being pivoted upon pins D D, near the base of the tub, a bent spring-lever connected at its ends to the said swinging hanger near the upper parts of the same as described and bearing against the said pins D D, whereby the entire lever is utilized as a spring, and the said pins, substantially as and for the purpose set forth.

In testimony whereof I have signed my name to this specification, in the presence of two subscribing witnesses, on this 29th day of January, A. D. 1897.

CHARLES GIFFORD.

Witnesses:
FRANK G. PARKER,
WILLIAM GASON.